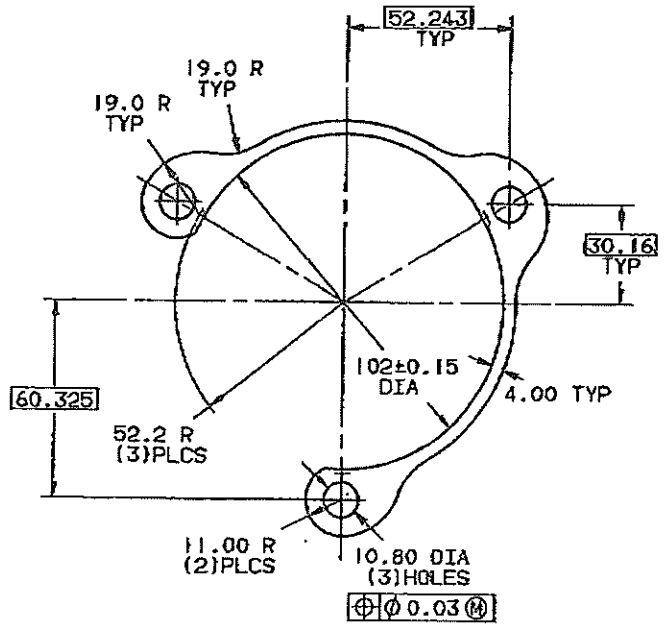

PART NO.	"A" DIM.
401883R2	0.064-0.089
401884R2	0.114-0.140
401885R2	0.159-0.197
184195C2	0.711-0.813

MUST CONFORM TO CLEANLINESS SPEC ES-A7003 WHEN MEASURED PER PROCEDURE ES-A7028.

MUST BE FREE OF BURRS.

KC KEY CHARACTERISTIC REV. 0

THE KEY CHARACTERISTIC SYMBOL IDENTIFIES CRITICAL FEATURES REQUIRING PROCESS CAPABILITY DEMONSTRATED TO A CASE CO. SPECIFIED METHOD PER CORPORATE POLICY AND PROCEDURE C-133. ALL FEATURES SHALL BE WITHIN SPECIFIED LIMITS.

METRIC

UNLESS OTHERWISE SPECIFIED DIMENSIONS ARE IN MILLIMETRES SURFACE TOUGHNESS IN MICROMETRES Ra

METRIC TOLERANCES UNLESS OTHERWISE SPECIFIED

GEOMETRIC DRAWING SYMBOLS

THIRD ANGLE PROJECTION

MODEL

APPROXIMATE MASS Kg

COM A2

J I Case A Tenneco Company Racine, Wisconsin USA

DRAWN HDT

NONE

CHART - SHIM

MATERIAL HS 438

PART NO. EZA-1294

C93097I	A2	184195C2 WERE A1 & C1	JP	23JUL93	FD	
"	A2	401883R2, 401884R2, 401885R2 &	JP	23JUL93	FD	
"	A1	REVISED AND REDRAWN ON CADAM	JP	23JUL93	FD	

F3808 1

Jen