FORD MOTOR COMPANY
TRACTOR AND IMPLEMENT DIVISION — PRODUCT ENGINEERING

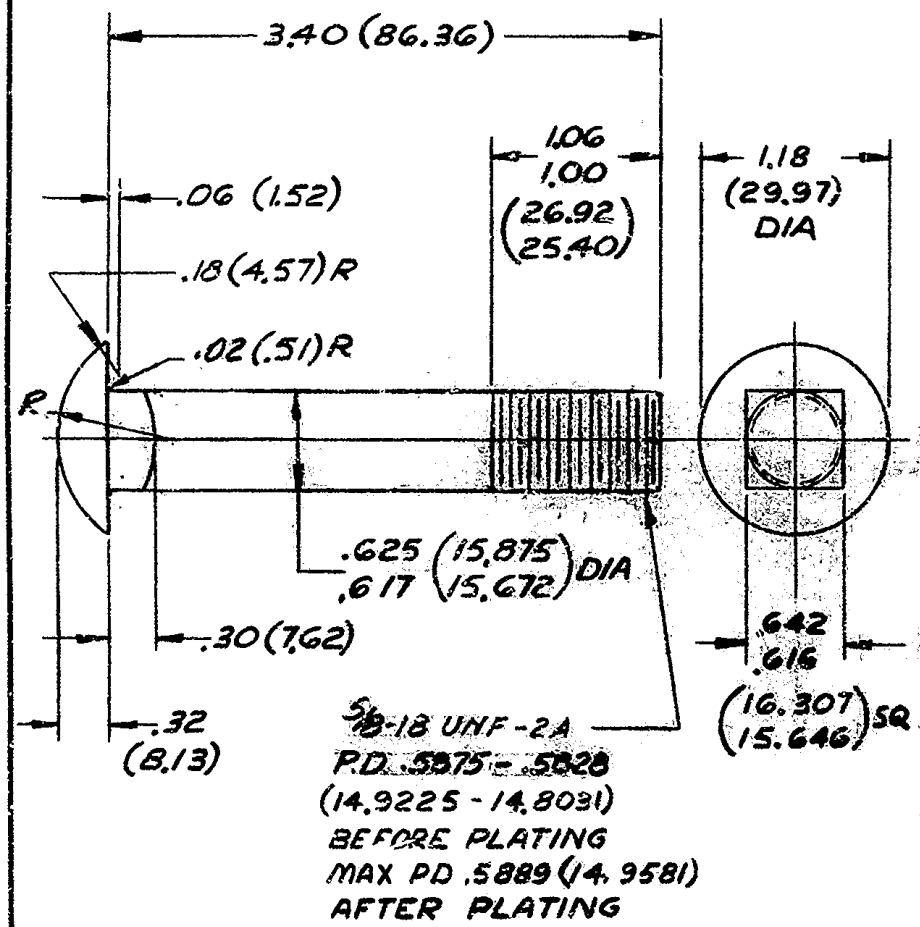

(A) MUST CONFORM TO GENERAL SPECIFICATION FOR LIKE PART AND FINISH IN STANDARDS PART BOOK

DIMENSIONS APPEARING IN PARENTHESES ( ) REPRESENT EQUIVALENT IN MILLIMETERS

NO. 374713-S8

DATE	LET	REVISIONS	REL NO.	DR.	CK.
6-20-60		RELEASED	NL-186		
9-2-64	A	ADDED NOTE	CNT-385316-	RM	
	B	ADDED METRIC DIMS & NOTE	CNT 385316-	RM	
	C	UPDATED MATL CALLOUT	CNT-385316-	RM	
9-2-64		RELEASED	NT-3116		

REFERENCE 350719-S8

DRAWN BY	COMPLETED	CHECKED	APPROVED	SCALE
Maguire	5-6-60	Maguire	[illegible]	FULL

DO NOT SCALE

TOLERANCES NOT OTHERWISE SPECIFIED
MACHINED DIM: ± .01 (.25) STAMPED DIM: ±
HOLE DIA: FORD MFG STDS DIM: ±
ANGULAR DIM: ± DIM: ±

MATERIAL SAE GRADE 5

APPROVED [illegible]
DATE 5-9-60

NAME BOLT - 5/8 - 18 X 3.40 (86.36) CARRIAGE HEAD

PART NO. 374713-S8

ENGR FEB.59 2891pati PRINTED IN U.S.A. K&E 166