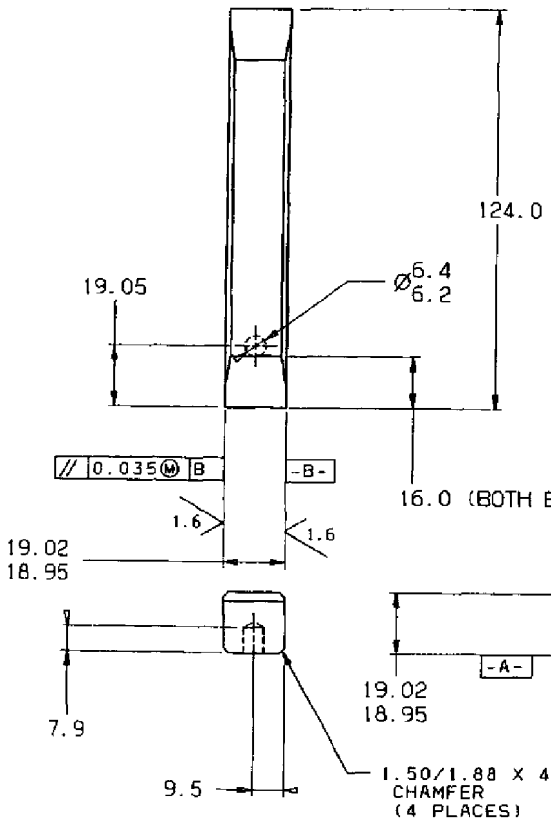

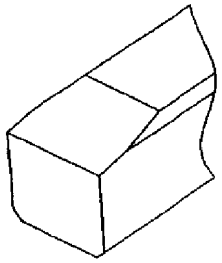

ISO
2 X SIZE

NOTE:

3.2 FINISH ALL OVER
EXCEPT AS SHOWN

MUST BE CLEAN AND
FREE OF BURRS

AREA BELOW RESERVED FOR REVISIONS

2911874	C1	ADDED PARALLELISM	MDA	02AUG91	
	C	REDWN ON CTA FROM CCM	MDA	02AUG91	

METRIC
UNLESS OTHERWISE SPECIFIED:
DIMENSIONS ARE IN MILLIMETRES
SURFACE ROUGHNESS IN MICROMETRES Ra

J I Case
A Tenneco Company
Racine, Wisconsin 53404

CAGE 10988

NONE

KEY
REAR WHEEL

MS 382
1045 STEEL

GLL 20DEC89

WLO 21DEC89

APPROXIMATE MASS Kg

SYSTEM CTA
SIZE A2

SCALE 1:1
SHT 1 OF 1

A63219

F3808