PURE HEAT™

by HYDRO~QUIP

UNIVERSAL INLINE HYDROMASSAGE BATH HEATER INSTALLATION INSTRUCTIONS

This Manual Covers:

PRESSURE SERIES (*1.5″ **2″)

5 1/2″ Models
PH101-15UP-S - 120V, 1500W*

7″ Models
PH101-15UP - 120V, 1500W*
PH101-10UP - 120V, 1000W*
PH101-65UP - 120V, 650W*
PH301-15UP - 120V, 1500W**
PH203-20UP - 240V, 2000W*

VACUUM SERIES (*1.5″ **2″)

5 1/2″ Models
PH101-15UV-S - 120V, 1500W*

7″ Models
PH101-15UV - 120V, 1500W*
PH101-10UV - 120V, 1000W*
PH101-65UV - 120V, 650W*
PH301-15UV - 120V, 1500W**
PH203-20UV - 240V, 2000W*

CARTON CONTENTS:

ALL MODELS INCLUDE: A, G & H

Pressure Series:

1.5″ Models Include: **B, C, D**

2″ Models Include: **E, F**

Vacuum Series:

1.5″ Models Include: **D**

2″ Models Include: **E**

A - One (1) Pure Heat heater
B - Two (2) 1.5″ X 1″ SPIG Tailpieces
C - Two (2) 1.5″ X 1″ SOC Tailpieces
D - Two (2) 1.5″ X 1.5″ SOC Tailpieces
E - Two (2) 2″ X 2″ Tailpieces**
F - Two (2) 2″ X 2″SPIG x 1.5″ SOC Tailpieces**
G - Two (2) heater gaskets
H - One (1) #8AWG bonding wire

****Only this set of tailpieces with PH301-15UP/V**

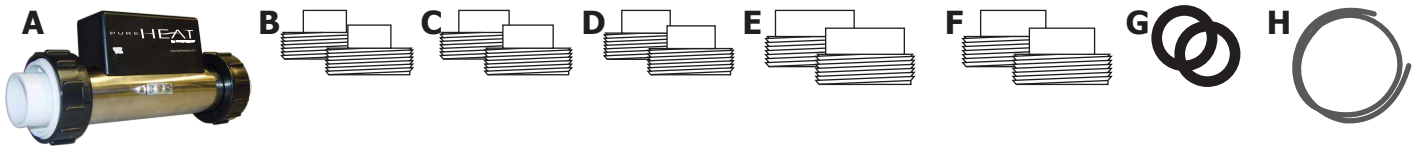

Designed to maintain bath water temperature and is not meant to heat water from cool or cold.

IMPORTANT SAFETY INSTRUCTIONS

INSTRUCTIONS PERTAINING TO RISK OF FIRE, ELECTRICAL SHOCK OR INJURY TO PERSON

WARNING - When using this unit, basic precautions should always be followed, including the following:

1. **READ AND FOLLOW ALL INSTRUCTIONS**

2. The heater must be connected only to a supply circuit that is protected by a ground-fault-circuit-interrupter (GFCI). Such a GFCI should be provided by the installer and should be tested on a routine basis. To test the GFCI, push the test button. The GFCI should interupt power. Push the reset button. The Power should be restored. If the GFCI fails to operate in this manner, the GFCI is defective. If the GFCI interrupts power to the heater without the test button being pushed, a ground current is flowing, indicating the possibility of an electrical shock. Do not use this hydromassage bathtub. Disconnect this hydromassage bathtub and have the problem corrected by a qualified service representative before using.

3. **SAVE THESE INSTRUCTIONS**

Prolonged immersion in hot water may induce hyperthermia. Causes, symptoms, and effects of hyperthermia:

Hyperthermia occurs when the internal temperature of the body reaches a level several degrees above the normal body temperature of 98.6°F. The symptoms of hyperthermia include an increase in the internal temperature of the body, dizziness, lethargy, drowsiness, and fainting. The effects of hyperthermia include:

A) Failure to perceive heat,

B) Failure to recognize the need to exit the bathtub,

C) Unawareness of impending hazard,

D) Fetal damage in pregnant women,

E) Physical inability to exit the bathtub, and

F) Unconsciousness resulting in the danger of drowning.

WARNING - The use of alcohol, drugs, or medication can greatly increase the risk of fatal hyperthermia.

Reading all instructions prior to beginning the installation of your Pure Heat heater will ensure that you have:

A) Purchased the correct heater

B) Identified the best installation location

C) The necessary electrical connection has been provided

CONTENTS

SAFETY INSTRUCTIONS 1
CONTENTS & GLOSSARY 2
MODEL IDENTIFICATION 3
INSTALLATION INSTRUCTIONS (Heater Ready fitting Installed)
- **Pressure Installation** 5
- **Vacuum Installation** 6

INSTALLATION INSTRUCTIONS (No Heater Ready fitting)
- **Pressure Installation** 7
- **Vacuum Installation** 9

ELECTRICAL REQUIREMENTS 11
BONDING YOUR HEATER 12
TEST YOUR INSTALLATION 13
TROUBLESHOOTING 14
INSTALLATION NOTES 15
WARRANTY 15
TEMPLATE ILLUSTRATION 16
TEMPLATE CUTOUT 17

GLOSSARY

5 1/2" (-S) Refers to Whirlpool Bath Heaters where stainless steel heater housing measures 5 1/2 inches from flat sealing surface to flat sealing surface.

7" Refers to Whirlpool Bath Heaters where stainless steel heater housing measures 7 inches from flat sealing surface to flat sealing surface.

De-burr Refers to removing excess plastic that may have built up during the cutting process.

Inline Heater A heater that can be installed directly inline in the existing plumbing system of a hydromassage bathtub.

Heater Ready Fitting Molded plastic heater blank assembly, provided for ease of aftermarket heater installation.

Pump Union Refers to the plastic pieces used to join the bathtubs plumbing system to the hydromassage jet pump.

PVC Refers to the plastic plumbing system of your hydromassage bathtub. This will be referred to during the cutting and glueing procedures.

Tailpiece Refers to the threaded plastic pieces included with your heater that are glued to the hydromassage bathtubs plumbing and allow the heater to be attached.

Tee Heater A heater that is just that, shaped like a "T". These heaters connect directly to the pump of a hydromassage bathtub.

"UP" Series Pressure - Refers to the "discharge" side of the pump. The water discharged from the pump supplies all of the pressure fittings such as the hydromassage jets that eject water into the bathtub. Throughout these instructions discharge will be referred to as "pressure".

"UV" Series Vacuum - Refers to the "suction" side of the pump. The water that is pulled through the bathtubs suction fitting is routed to the pump via the "vacuum" plumbing. Throughout these instructions suction will be referred to as "vacuum".

MODEL IDENTIFICATION

HEATER READY FITTING INSTALLED

If your hydromassage bathtub has been equipped at the factory with a Heater Ready fitting, the manufacturer has already chosen the best place for your Pure Heat heater to be installed. (See figures 2 & 3 below for common heater location.) **Note: these instructions do not cover the Tee Style hydromassage bathtub heater.**

INLINE HEATER

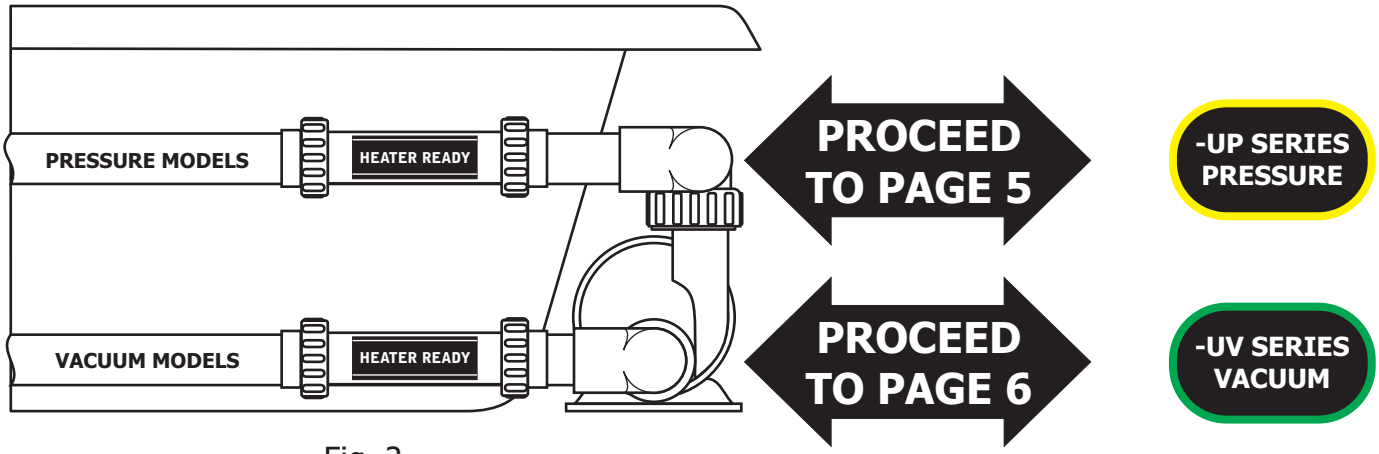

Fig. 2

TEE HEATER

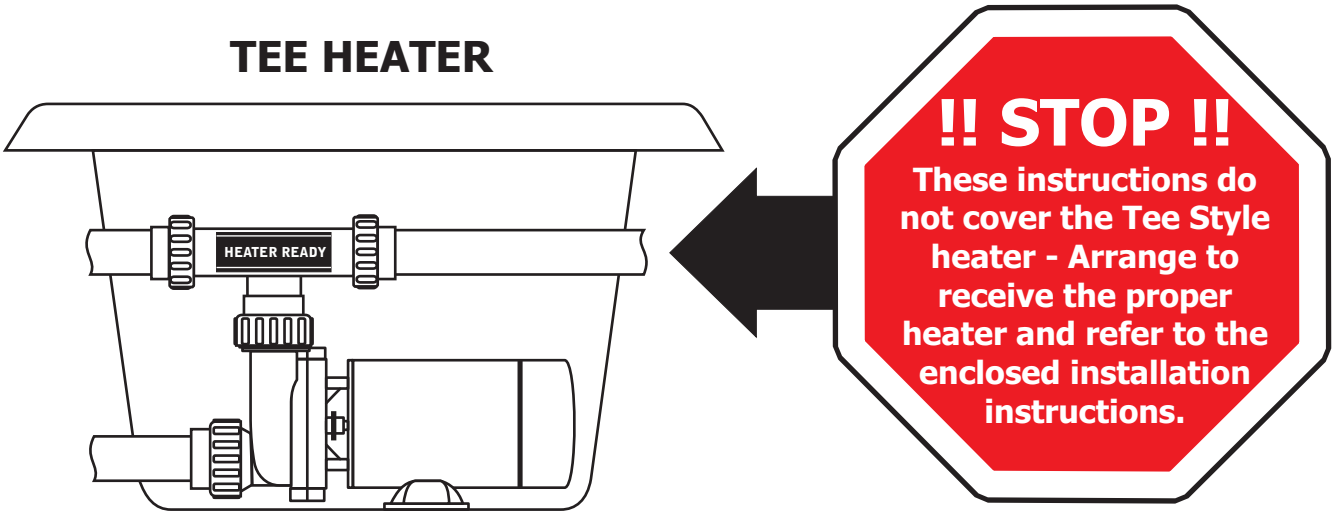

Fig. 3

NO HEATER READY FITTING

MODEL IDENTIFICATION

If your hydromassage bathtub did not come equipped with a Heater Ready fitting you will need to choose an appropriate location to install the Pure Heat heater. Be sure you choose a location that will be accessible if a need for service should arise. The model of Pure Heat heater (pressure vs vacuum) is clearly marked on the outside of the carton. This will determine where the heater is installed. (See figures 4-6 below for common heater location.)

INLINE PRESSURE HEATER

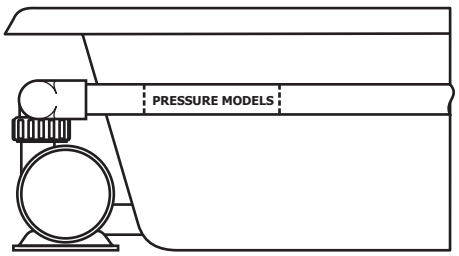

PROCEED TO PAGE 7

-UP SERIES PRESSURE

Fig. 4

INLINE PRESSURE HEATER

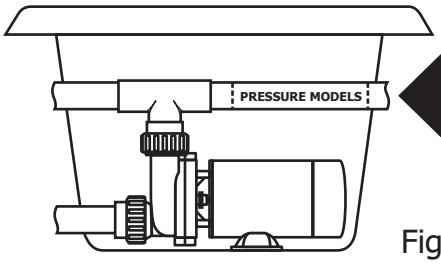

PROCEED TO PAGE 7

-UP SERIES PRESSURE

Fig. 5

INLINE-PRESSURE & VACUUM MODELS

-UP SERIES PRESSURE

PROCEED TO PAGE 7

-UV SERIES VACUUM

PROCEED TO PAGE 9

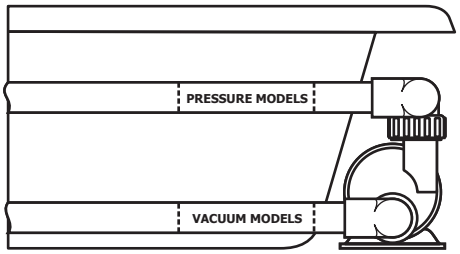

Fig. 6

CLEARANCE:

Your Pure Heat heater has been specifically designed to be compact and easy to install. In most cases there will be no interference installing your hydromassage bathtub with the addition of a Pure Heat heater. Prior to installing your heater, consult manufacturers instructions regarding bathtub installation clearance requirements. (Fig. 7)

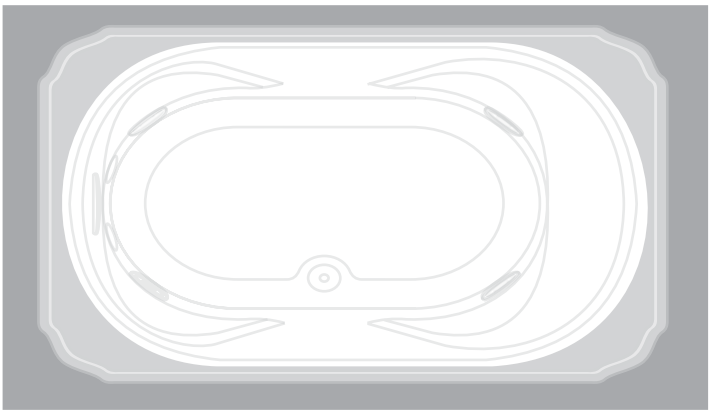

Fig. 7

1 - Power to the hydromassage bathtub must be turned OFF and all water must be drained from the bathtub before proceeding.

2 - Loosen nuts and remove Heater Ready fitting and existing gaskets (see Fig. 8).

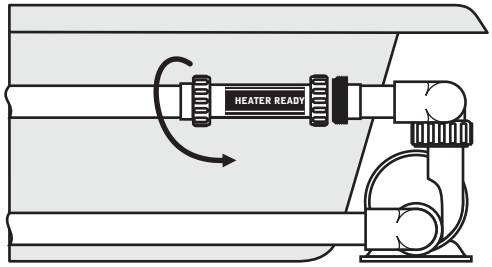

ASSURE YOU ARE INSTALLING A PRESSURE MODEL FOR THIS LOCATION

Fig.8

3 - Remove the new heater gaskets included with your Pure Heat heater and install them onto the plumbing tailpieces, making sure the gasket ridge is seated in the tailpiece groove (see Fig. 9).

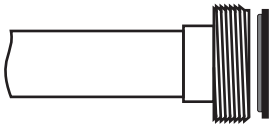

Fig. 9

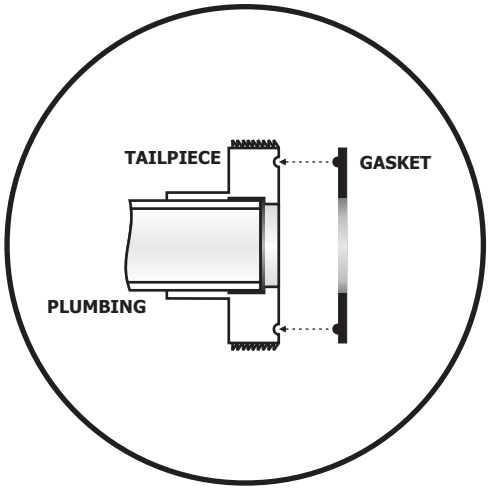

4 - You are now ready to install the heater in the open space where the Heater Ready fitting was located (ensure that the gaskets remain in place). Slide both heater nuts inward toward the center of the heater to expose the mating surfaces of the heater housing. Slide the heater carefully into place between the tailpieces and gaskets and hand-tighten heater nuts. If you use a wrench be careful not to over-tighten, the nuts can crack (see Fig. 10).

IF THERE IS INSUFFICIENT SPACE, THE HEATER MAY BE ROTATED TO THE CONTROL BOX DOWN POSITION.

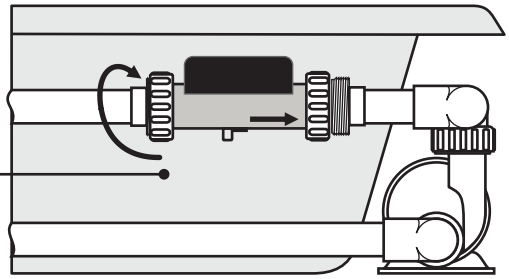

CONTINUE ON TO PAGE 12 "BONDING YOUR HEATER"

Fig. 10

VACUUM INSTALLATION

Heater Ready Fitting Installed **-UV SERIES VACUUM**

1 - Power to the hydromassage bathtub must be turned OFF and all water must be drained from the bathtub before proceeding.

2 - Loosen nuts and remove Heater Ready fitting and existing gaskets (see Fig. 11).

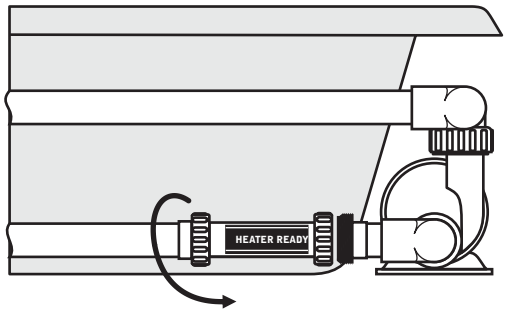

ASSURE YOU ARE INSTALLING A VACUUM MODEL FOR THIS LOCATION

Fig. 11

3 - Remove the new heater gaskets included with your Pure Heat heater and install them onto the plumbing tailpieces, making sure the gasket ridge is seated in the tailpiece groove (see Fig. 12).

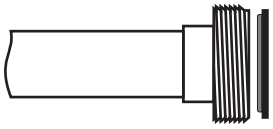

Fig. 12

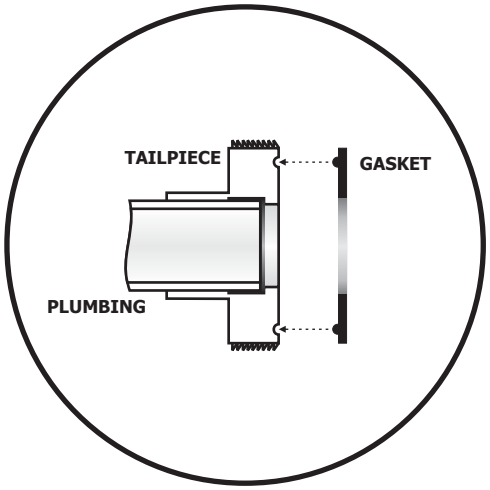

4 - You are now ready to install the heater in the open space where the Heater Ready fitting was located (ensure that the gaskets remain in place). Slide both heater nuts inward toward the center of the heater to expose the mating surfaces of the heater housing. Slide the heater carefully into place between the tailpieces and gaskets and hand-tighten heater nuts. If you use a wrench be careful not to over-tighten, the nuts can crack (see Fig. 13).

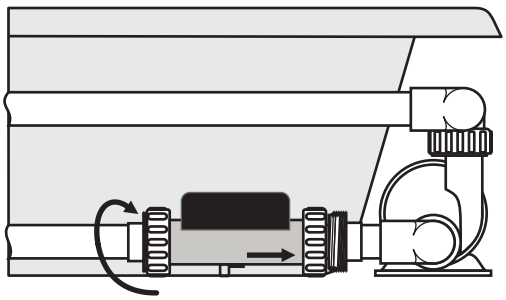

Fig.13

CONTINUE ON TO PAGE 12 "BONDING YOUR HEATER"

1 - Power to the hydromassage bathtub must be turned OFF and all water must be drained from the bathtub before proceeding.

2 - Locate the hydromassage jet pump and "pressure" plumbing in the system. Remember, the water enters the pump through the front or "vacuum" side and exits through the top or "pressure" side.

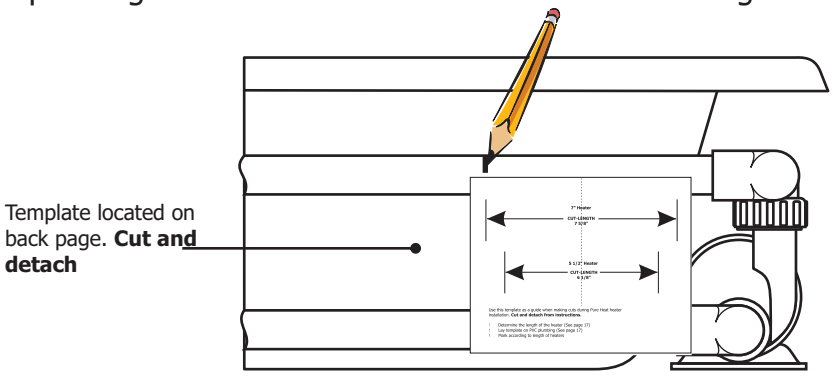

Fig. 14

3 - Choose a location for your Pure Heat heater close to the hydromassage jet pump, ensuring there is at least 2-1/2" of plumbing left on each side of the cuts to install the tailpieces. For convenience, a template has been provided on the back page of this instruction booklet. Simply detach, position against plumbing and mark according to plumbing size (see Fig. 14).

4 - Using a hacksaw, PVC cutter or a cable saw, cut the pipe at the marks made. If using a cable saw, carefully line the saw blade up with the marks that were made in the previous step and begin cutting using an alternating pulling/releasing motion (see Fig. 15). Once successfully cut away, discard the detached portion of plumbing.

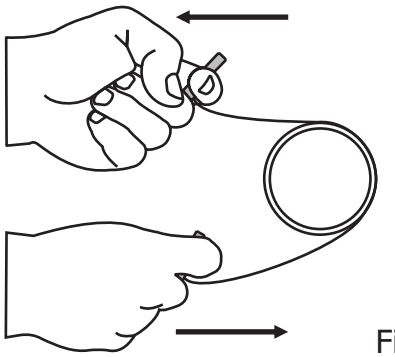

Note: Let the saw blade do the work, do not put excess pressure on the plumbing. Have someone else stabilize the plumbing while you cut if needed.

Fig. 15

5 - De-burr the plumbing, clean outer surface of plumbing and prepare the surfaces for gluing.

6 - Your Pure Heat heater includes three (3) sets of tailpieces (1 set for 2" plumbing) to adapt the heater to virtually any hydromassage bathtubs plumbing system. Dry fit the tail pieces to determine which tailpieces adapt properly to your plumbing and discard the tailpieces that do not fit.

PRESSURE INSTALLATION
(continued)

7 - You are now ready to install the tailpieces onto the bathtub plumbing. Apply PVC glue to one end of the plumbing. Spread glue evenly over a 1-1/4" area from the end of the cut. Quickly apply glue to the inside socket of the tailpiece. Before the glue dries, slide the tailpiece onto the plumbing with a slight twisting motion (see Fig. 16) assuring it has reached the stop built into the tailpiece and hold for 15-seconds to allow the glue to setup. Wipe away any excess glue and repeat the gluing process on the second tailpiece. Once the glue has set, you should have approximately 7" opening for part numbers: PH101-15UP, PH101-10UP, PH101-65UP, PH301-15UP & PH203-20UP **OR** 5-1/2" opening for part numbers: PH101-15UP-S (see Fig. 17) in order to install your Pure Heat heater.

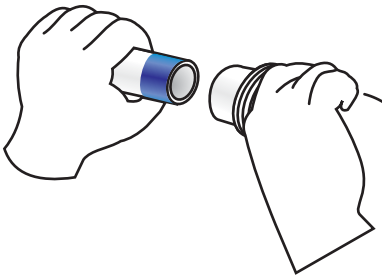

Fig. 16

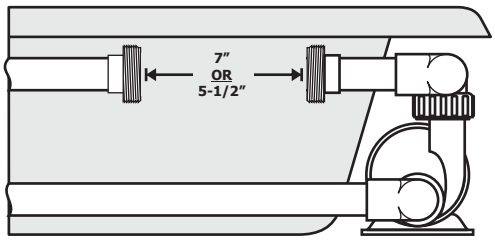

Fig. 17

8 - Remove two (2) heater gaskets included with your Pure Heat heater and install them onto the plumbing tailpieces, making sure the gasket ridge is seated in the tailpiece groove (see Fig. 18).

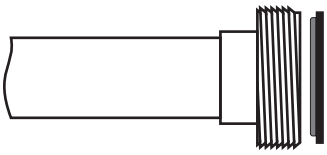

Fig. 18

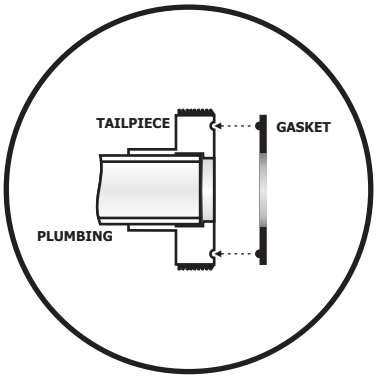

9 - You are now ready to install the heater in the open space between the two (2) tailpieces (ensure that the gaskets remain in place). Slide both heater nuts inward toward the center of the heater to expose the mating surfaces of the heater housing. Slide the heater carefully into place between the tailpieces and gaskets and hand-tighten heater nuts. If you use a wrench be careful not to over-tighten, the nuts can crack (see Fig. 19).

IF THERE IS INSUFFICIENT SPACE, THE HEATER MAY BE ROTATED TO THE CONTROL BOX DOWN POSITION.

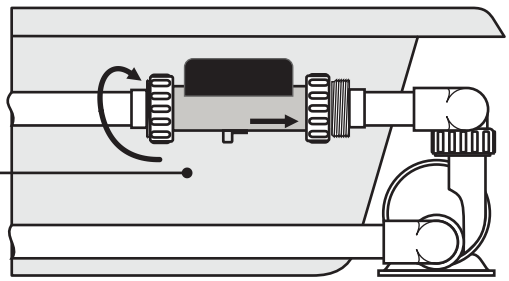

CONTINUE ON TO PAGE 12 "BONDING YOUR HEATER"

Fig. 19

1 - Power to the hydromassage bathtub must be turned OFF and all water must be drained from the bathtub before proceeding.

2 - Locate the hydromassage jet pump and "vacuum" plumbing in the system. Remember, the water enters the pump through the front or "vacuum" side and exits through the top or "pressure" side.

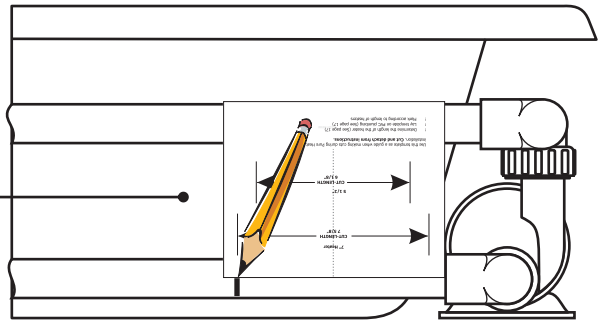

Fig. 20

3 - Choose a location for your Pure Heat heater close to the hydromassage jet pump, ensuring there is at least 2-1/2" of plumbing left on each side of the cuts to install the tailpieces. For convenience, a template has been provided on the back page of this instruction booklet. Simply detach, position against plumbing and mark according to plumbing size (see Fig. 20).

4 - Using a hacksaw, PVC cutter or a cable saw, cut the pipe at the marks made. If using a cable saw, carefully line the saw blade up with the marks that were made in the previous step and begin cutting using an alternating pulling/releasing motion (see Fig. 21). Once successfully cut away, discard the detached portion of plumbing.

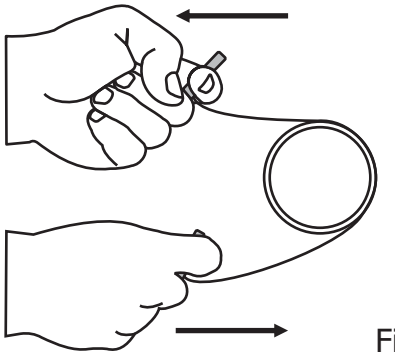

Note: Let the saw blade do the work, do not put excess pressure on the plumbing. Have someone else stabilize the plumbing while you cut if needed.

Fig. 21

5 - De-burr the plumbing, clean outer surface of plumbing and prepare the surfaces for gluing.

6 - Your Pure Heat heater includes three (3) sets of tailpieces (1 set for 2" plumbing) to adapt the heater to virtually any hydromassage bathtubs plumbing system. Dry fit the tail pieces to determine which tailpieces adapt properly to your plumbing and discard the tailpieces that do not fit.

VACUUM INSTALLATION
(continued)

7 - You are now ready to install the tailpieces onto the bathtub plumbing. Apply PVC glue to one end of the plumbing. Spread glue evenly over a 1-1/4" area from the end of the cut. Quickly apply glue to the inside socket of the tailpiece. Before the glue dries, slide the tailpiece onto the plumbing with a slight twisting motion (see Fig. 22) assuring it has reached the stop built into the tailpiece and hold for 15-seconds to allow the glue to setup. Wipe away any excess glue and repeat the gluing process on the second tailpiece. Once the glue has set, you should have approximately 7" opening for part numbers: PH101-15UV, PH101-10UV, PH101-65UV, PH301-15UV, & PH203-20UV **OR** 5-1/2" opening for part numbers: PH101-15UV-S (see Fig. 23) in order to install your Pure Heat heater.

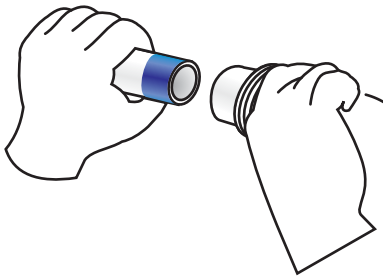

Fig. 22

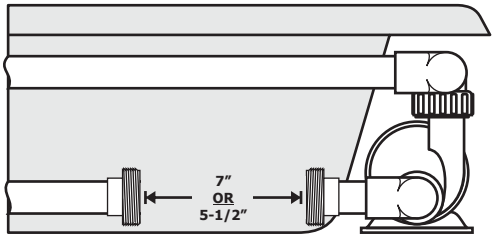

Fig. 23

8 - Remove two (2) heater gaskets included with your Pure Heat heater and install them onto the plumbing tailpieces, making sure the gasket ridge is seated in the tailpiece groove (see Fig. 24).

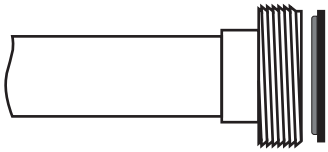

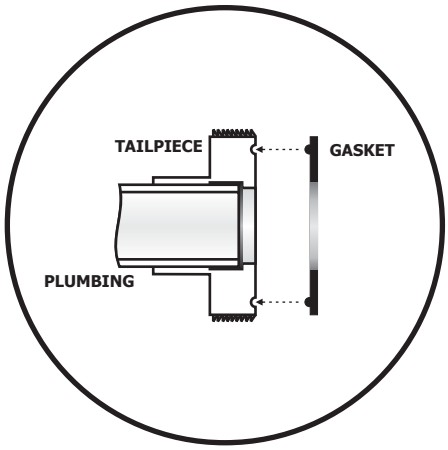

Fig. 24

9 - You are now ready to install the heater in the open space between the two (2) tailpieces (ensure that the gaskets remain in place). Slide both heater nuts inward toward the center of the heater to expose the mating surfaces of the heater housing. Slide the heater carefully into place between the tailpieces and gaskets and hand-tighten heater nuts. If you use a wrench be careful not to over-tighten, the nuts can crack (see Fig. 25).

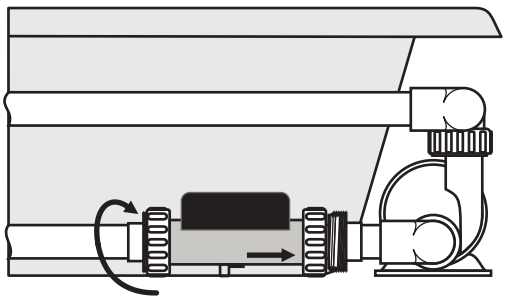

CONTINUE ON TO PAGE 12 "BONDING YOUR HEATER"

Fig. 25

ELECTRICAL REQUIREMENTS

NOTE: Read both the "Dedicated Circuit" and "Single Circuit" sections to determine the electrical requirements of your heater before proceeding.

DEDICATED CIRCUIT INSTALLATION

A qualified and licensed electrician in accordance with the National Electric Code (NEC) Article 680, Canadian Electric Code, and with any local codes must accomplish the electrical installation.

All connections must be made according to the electrical installation label on the outside of the control box. Follow the instructions from the label if they are different than the instructions in this manual. If your electrician is not absolutely sure how to connect your system correctly, call your local dealer. Any mistake may be costly and void your equipment warranty.

The GFCI (Ground Fault Circuit Interrupter) is a mandatory electrical safety device required for all hydromassage bathtubs as specified in the National Electrical Code Article 680-70.

Your bath equipment may require a DEDICATED CIRCUIT. This means no other appliances or lights can be on this circuit. Refer to equipment data label for power supply requirements of your bath heater.

Use copper conductors ONLY. The ground must be sized following the National Electric Code, Table 250-122.

For Power conductor size, refer to the National Electric Code Table 310-16.

These models will most likely require a dedicated circuit due to their high power demand and voltage requirements.

MODELS	MAX AMPS	CIRCUIT BREAKER	GFCI REQUIRED	BONDING REQUIRED
PH101-15UP(-S)	**12**	**15**	**YES**	**YES**
PH101-15UV(-S)	**12**	**15**	**YES**	**YES**
PH301-15UP	**12**	**15**	**YES**	**YES**
PH301-15UV	**12**	**15**	**YES**	**YES**
PH203-20UV	**8**	**10**	**YES**	**YES**
PH203-20UP	**8**	**10**	**YES**	**YES**

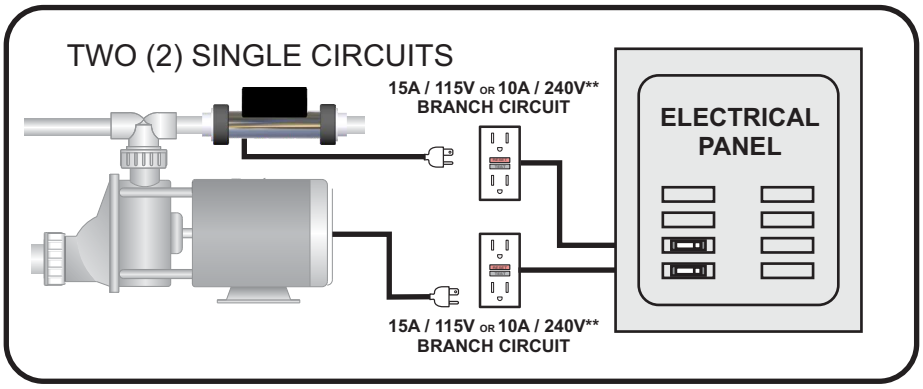

****240V Heater cords do not have a Nema plug and require hard wiring of the unit.**

SINGLE CIRCUIT INSTALLATION**

In certain cases you may be able to plug the heater and the pump into the same single circuit outlet. This generally requires that one or both of the components have a very low amperage rating. See the chart below to determine if your components are sized to allow this type of installation.

If your heater amps are . . .		Your pump amps are less than. . .		You can use a single circuit this size
5.4A (650W)	AND	10.6A	THEN	20A
8.3A (1000W)	AND	7.7A	THEN	20A
12.5A (1500W)	AND	3.5A	THEN	20A

**Single circuit installation does not apply to 240V heaters.

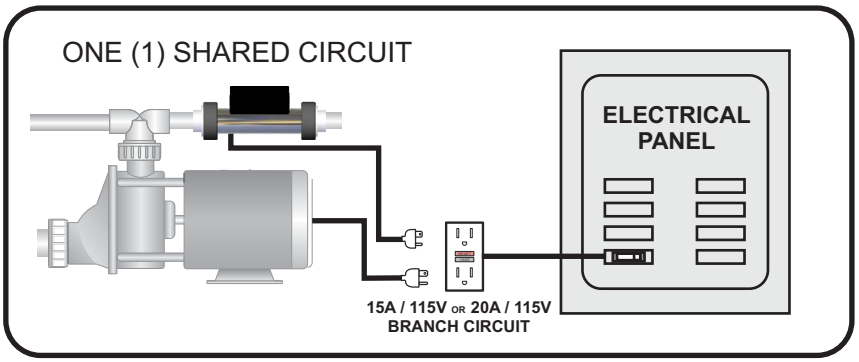

BONDING YOUR HEATER

1 - Prior to testing your installation for leaks, you **must** properly bond the Whirlpool Bath Heater to the bonding system of your hydromassage bathtub (see Fig. 26). All Whirlpool Bath Heaters come equipped with a bonding lug and 8AWG bonding wire specifically for this purpose. Refer to bathtub manufacturers instructions to locate the bonding system. All electrical wiring and bonding must be done as specified in Article 680, National Electric Code and your local Building Code.

8AWG Bonding Wire
(Included with your heater - *May Be on Bottom of Tube*)

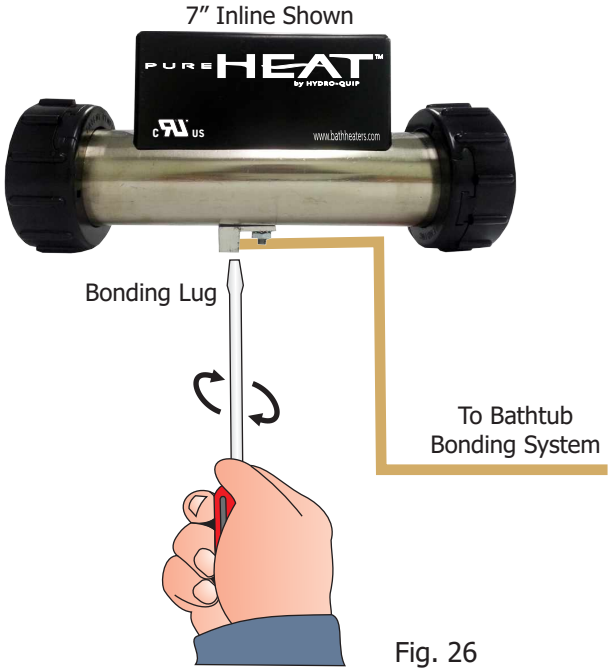

Fig. 26

TEST YOUR INSTALLATION

8 - After allowing the glue joints to dry for 24-hours, a **STATIC** leak test must be performed. You can accomplish this by **SLOWLY** filling the tub with **COLD WATER** until the water level is at least 2" above the highest jet.

IMPROPER INSTALLATION OF THE PURE HEAT HEATER CAN RESULT IN WATER LEAKING FROM THE PLUMBING SYSTEM! WATER DAMAGE CAN OCCUR TO SPACES BELOW OR ADJACENT TO THE HYDROMASSAGE BATHTUB.

Do not leave the tub unattended during the testing process and only fill the tub with enough water to exceed the level of the hydromassage jets.

FILL THE TUB SLOWLY SO FILLING CAN BE STOPPED IF A LEAK IS DETECTED. DRAIN THE TUB IMMEDIATELY IF A LEAK IS DETECTED AND CORRECT THE PROBLEM BEFORE RETESTING.

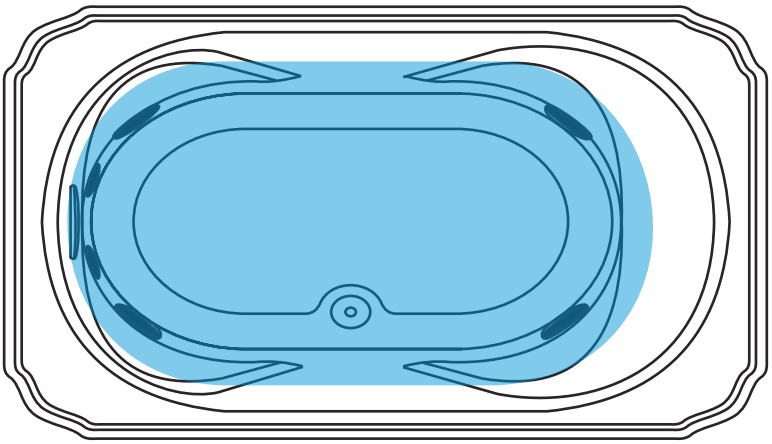

9 - If no leaks were detected, a **PRESSURE** leak test must be performed. Perform this final **REQUIRED** leak test by activating the hydromassage jet pump. Allow the system run for 15-20 minutes minimum. The cold water will allow you to verify that the "Heater On" indicator is illuminated on your Pure Heat heater. If the light does not illuminate or if you encounter any other problems, refer to the Troubleshooting section of these instructions.

IF NO LEAKS WERE DETECTED AND YOU HAVE VERIFIED THAT YOUR PURE HEAT HEATER IS FUNCTIONING PROPERLY, CONGRATULATIONS, THE INSTALLATION OF YOUR PURE HEAT HEATER IS COMPLETE. YOU CAN NOW RELAX AND ENJOY THE COMFORT YOU WILL EXPERIENCE IN YOUR HEATED HYDROMASSAGE BATHTUB.

TROUBLESHOOTING

THERE ARE NO SERVICEABLE PARTS INSIDE HEATER - DO NOT OPEN

NOTHING WORKS!

Main Breaker is OFF - Set to On
GFCI Tripped - Press Reset
Power Cord not plugged in - Plug in power cord (if plugged in, is plug lit?)

HEATER "ON" LIGHT DOES NOT TURN ON

Overheat Protection Tripped - Power off, let cool, then power on
Power cord not plugged in - Plug in power cord (if plugged in, is plug lit?)
GFCI Tripped - Press Reset
No Power to Heater - Reset breaker at service panel
Pump Is Not Running - Activate hydromassage pump
Water Temperature Too High

HEATER "ON" LIGHT WILL NOT TURN OFF

Water Level Too Deep for Pressure Switch Setting - Lower Water Level
Pressure Switch Defective - Replace Heater
Heater Wiring Error - Replace Heater

OVERHEAT PROTECTION TRIPPED

Water Blockage - Correct/Remove Blockage
Low Water Flow - Correct Problem
High-Limit Will Not Reset - Replace Heater

WATER LEAKS FROM CONTROL BOX

Defective Component - Replace Heater

GFCI TRIPS OCCASIONALLY

Lightning or Electrical Storm, Power Surge, Extremely Humid Conditions or Radio Frequency Interference - Reset GFCI Note: Assure Heater is Properly Grounded and Bonded
Inspect Heater for Leaks or Moisture - Correct or Replace as Required

GFCI TRIPS REPEATEDLY

Defective Component - Replace Heater

CIRCUIT BREAKER TRIPS

Breaker Size Improper - Contact a qualified service technician
Heater Requires a DEDICATED Circuit - Assure No Other Appliances are on this Circuit

TEMPERATURE NOT REACHING COMFORT ZONE

Designed to maintain bath water temperature and is not meant to heat water from cool or cold.

PURE HEAT TWO YEAR LIMITED WARRANTY

Hydro-Quip, the manufacturer, warrants its Pure Heat whirlpool bathtub heaters to be free from defects in material and workmanship for a period of two (2) years from the date of manufacture.

This warranty extends only to the original purchaser for non commercial product usage.

Products determined to be defective within the warranty period will be repaired or replaced at the manufacturer's option with the following exclusions:

> *Damage or defect as a result of freezing, water chemistry, negligence, abuse, misapplication, unauthorized modification, improper installation, wear and tear, chemical attack or "acts of God" not controllable by the manufacturer.*

The manufacturer is not responsible for consequential damages. All expenses relating to labor or materials associated with access to, inspection, removal or reinstallation of the warrantable product is bourn by the purchaser. The purchaser's sole remedy will be the repair or replacement of the manufacturer's product.

Any products which are claimed to be defective must be shipped freight prepaid to Hydro-Quip and the repaired or replaced product will be returned to the sender freight collect. When sent to Hydro-Quip, the product must be accompanied by the sales receipt or other proof of the purchase date as well as the sender's name, mailing address, daytime phone number and any other information relating to this claim.

Unless state law expressly provides otherwise, Hydro-Quip will only be responsible for repair or replacement of any of its products that are found to be defective as provided above, and will not bear the cost of any consequential damages. This warranty gives you specific legal rights, but you may have other rights which vary from state to state.

INSTALLATION NOTES:

Date: _____

Installer/Electrician: _____

Address: _____

City: _____ **Zip:** _____

Phone: _____ **Mobile:** _____

PURE HEAT

ORDER CODE _____
MODEL _____
SERIAL _____
CODE _____
VOLTS/AMPS _____
PRODUCT _____

UL RECOGNIZED
HYDROMASSAGE
BATHTUBS

E158981

www.bathheaters.com

Keep this information handy if there is a need for service in the future. The data label located on the outside of the heater control box contains information that will be required if a need for service should arise.

Note: Identify you heater by part number

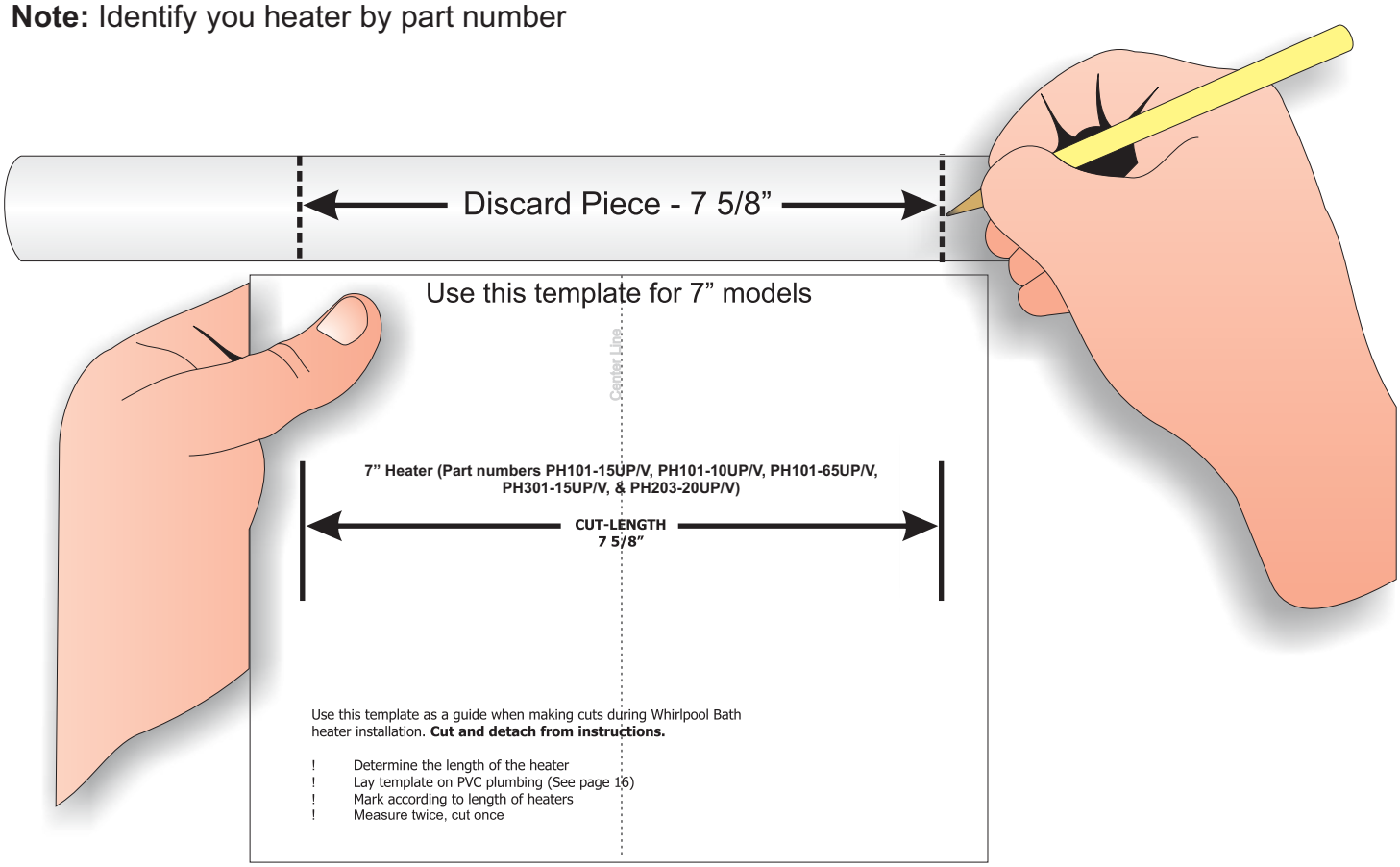

Fig. A - Mark PVC cut area

OR

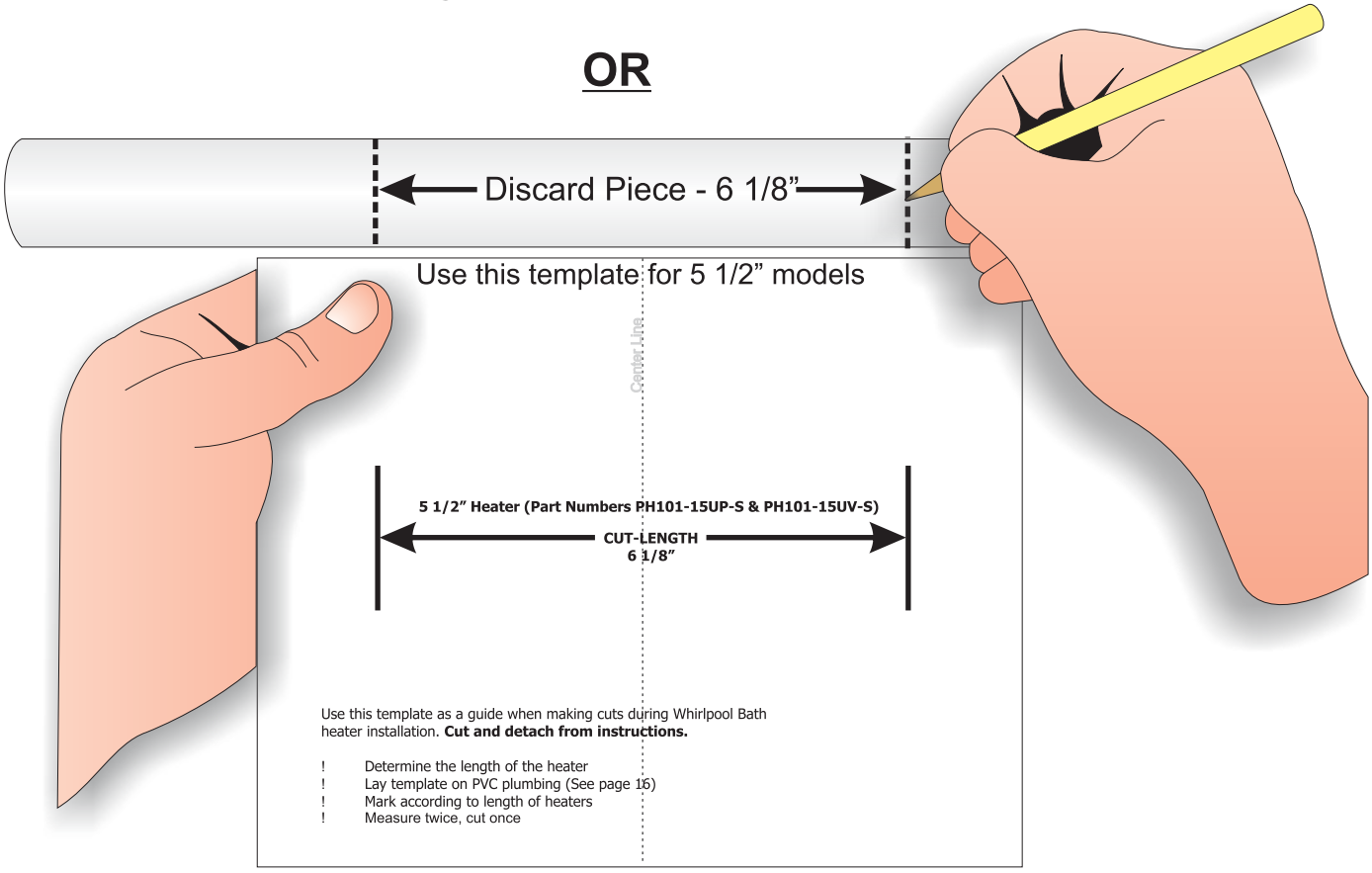

Fig. B - Mark PVC cut area

Use this template for 7” models

Center Line

7” Heater (Part Numbers PH101-15UP, PH101-15UV, PH101-10UP, PH101-10UV PH101-65UP, PH101-65UV, PH301-15UP, & PH301-15UV, PH203-20UP, PH203-20UV)

CUT-LENGTH
7 5/8”

Use this template as a guide when making cuts during Whirlpool Bath heater installation. **Cut and detach from instructions.**

! Determine the length of the heater
! Lay template on PVC plumbing (See page 16)
! Mark according to length of heaters
! **Measure twice, cut once**

CUT HERE

Use this template for 5 1/2” models

Center Line

5 1/2” Heater (Part Numbers PH101-15UP-S & PH101-15UV-S)

CUT-LENGTH
6 1/8”

Use this template as a guide when making cuts during Whirlpool Bath heater installation. **Cut and detach from instructions.**

! Determine the length of the heater
! Lay template on PVC plumbing (See page 16)
! Mark according to length of heaters
! **Measure twice, cut once**

CUT HERE

PURE HEAT™

by HYDRO~QUIP

510A N. Sheridan St. Corona, CA 92878

Email: info@bathheaters.com Internet: http://www.bathheaters.com