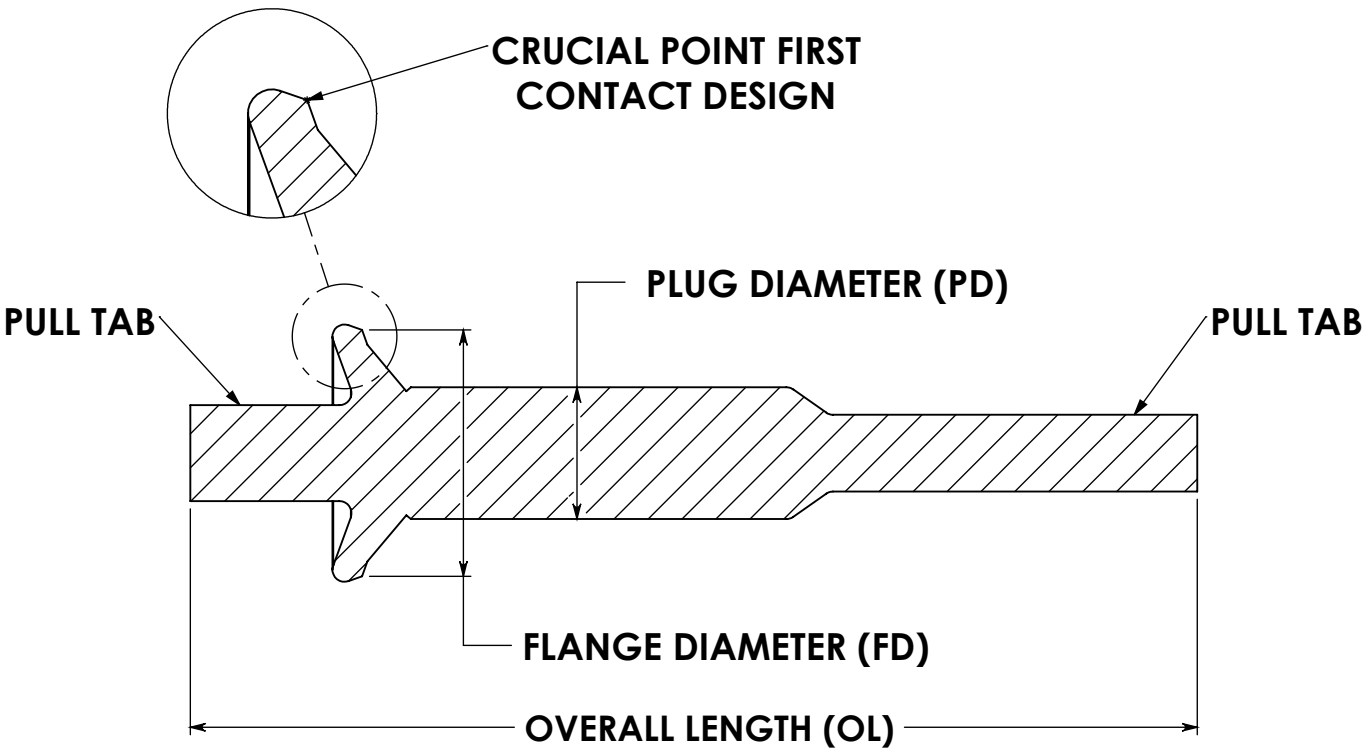
CRUCIAL POINT FIRST
CONTACT DESIGN
PLUG DIAMETER (PD)
PULL TAB
PULL TAB
FLANGE DIAMETER (FD)
OVERALL LENGTH (OL)

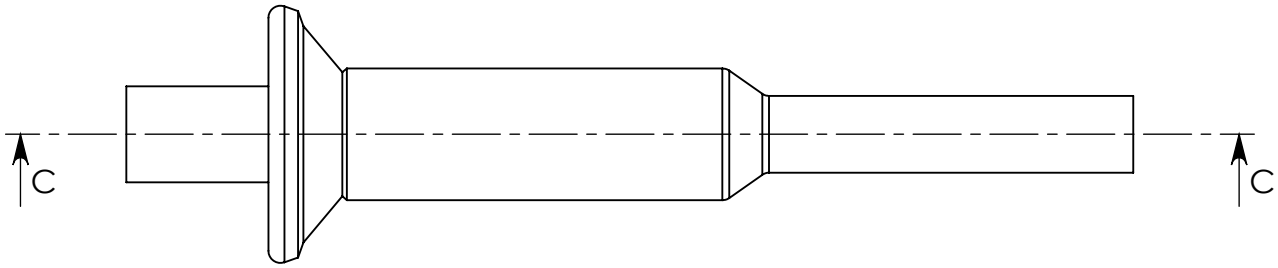
C
C