Manufacturer PDF Provided by www.southeasternequipment.net

Minuteman®
Excellence Meets Clean

User Manual

E20 Walk-Behind Scrubber
Traction Drive Cylindrical Deck

Manufacturer PDF Provided by www.southeasternequipment.net

This manual is furnished with each new ***MINUTEMAN E20***. This provides the necessary operating and preventive maintenance instructions. Operators must read and understand this manual before operating or servicing this machine.

This machine was designed to give you excellent performance and efficiency. For best results and minimal cost, please follow the general guidelines below:

- Operate the machine with reasonable care.
- Follow the manufacturer's suggested maintenance instructions as provided in this booklet.
- Use original Minuteman supplied parts.

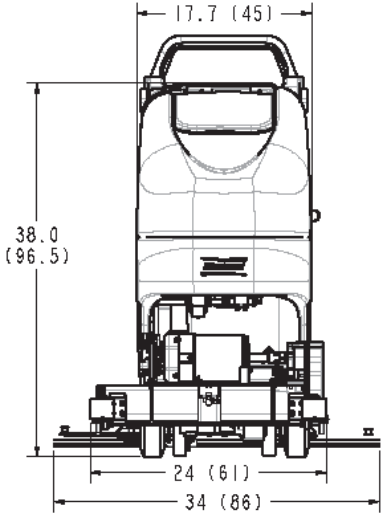

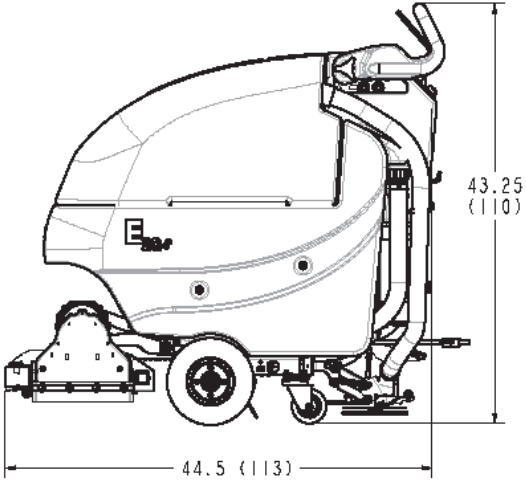

Manufacturer PDF Provided by www.southeasternequipment.net

Model ***E20 Traction Drive Cylindrical***

All Models Beginning with: E20C

	E20C
Current (Max)	40 amps
Battery Capacity (Lead Acid)	140Ah @20 hr
Battery Capacity (Gel)	95Ah @20 hr
Sound Level	69 dBA
Cleaning path width	20 in (51 cm)
Squeegee width	34 in (86 cm)
Productivity	27,280 ft^2 /hr (2,534 m^2)
Working Speed	3.0 mph (4.8 km per hr)
Transport Speed	3.1 mph (5.0 km per hr)
Rated voltage	24 volts
Vacuum flow	65 cfm (110 m^3/hr)
Vacuum waterlift	45 inches (112mbar)
Vacuum power	.60 HP (450 W)
Brush type	Cylindrical
Brush motor(s) power	3/4 HP (550W)
Number of brushes	2
Brush RPM	600 RPM
Solution capacity	12Gal (45 liters)
Recovery capacity	13 Gal (49 liters)
Working Grade	2%
Weight with batteries	370lbs (168 kg)
Weight without batteries	235 lbs (107 kg)
Dimensions (LxWxH)	44.5 x 24.0 x 38.0 (112.8 x 47.8 x 107.4 cm)
Drive Motor Power	1/5 HP (150W)

Battery Options				
Part Number	Type	Mfg'r	Capacity	
			Ah	@ hrs
956140	Lead Acid	Crown	140	20
956100	Sealed	Crown	95	20
956753	Lead Acid	Trojan	130	20

Manufacturer PDF Provided by www.southeasternequipment.net

Manufacturer PDF Provided by www.southeasternequipment.net

Safety Instructions **6**
Unpacking Instructions **7**
Inspection 7
Electrical 7
Batteries 7
Operator Responsibility 7
Machine Overview **8**
Controls 10
Bail Handle 11
Handle Adjustment Knobs 11
Key Switch 11
Direction Switch 11
Squeegee Lift Lever 11
Battery / Fault Gauge 11
Speed Control 11
Charge Status Indicator 11
Optional Hour Meter 12
Circuit Breakers 13
Battery Compartment 14
Diagnostic Code Guide 15
Machine Overview 15
Handle Adjustment 16
Angle Adjustment 16
Horizontal Adjustment 17
Solution Tank Drain Hose 18
Solution Level Indicator 18
Solution Fill Filter 19
Recovery Tank Drain Hose 19
Screened Float 20
Screened Float Removal 21
In-Line Solution Filter Assembly 22
Rear Squeegee 23
Cleaning the Squeegee 23
Changing the Squeegee Blades 23
Squeegee Blades 24
Angle Adjustment 24
Squeegee Blades 25
Height Adjustment 25
Brush Deck Maintenance 26
Brush Loading / Unloading 27
Brush Deck Maintenance 27
The E20 Cylindrical **28**
Machine Operation **30**
To Turn ON Machine 30
To Turn ON Vacuum 30
To Turn ON Brush Motor 30
To Turn on Cleaning Solution 30
Direction Switch 30
Speed control 30
Driving 30
To Charge Batteries 31
Hour Meter (Optional) 31
After Use **32**
Maintenance **33**
Troubleshooting 36
Warranty **38**

Manufacturer PDF Provided by www.southeasternequipment.net

IMPORTANT SAFETY INSTRUCTIONS

Operators must read and understand this manual before operating or maintaining this machine.
Do not operate this machine in flammable or explosive areas.
This machine is designed solely for scrubbing dirt and dust in an indoor environment. Minuteman does not recommend using this machine in any other capacity.
The following information below may cause a potential hazard to the operator and equipment. Read this manual carefully and be aware when these conditions can exist. Take necessary steps to locate all safety devices on the machine and train the personnel operating the machine. Report any machine damage or faulty operation immediately. **Do not use machine if it is not in proper operating condition.**

FOR SAFETY DURING OPERATION

Keep hands and feet clear of moving parts while machine is in operation.
Make sure all safety devices are in place and operate properly. All covers, doors and latches must be closed and fastened before use.
During operation, attention should be paid to other persons in the work area and especially if small children are present.
Electric motors and components can cause an explosion when operated near explosive materials or vapor. Do not operate this machine near flammable materials such as solvents, thinners, fuels, grain dust, etc.
Store or park this machine on a level surface only. To prevent unauthorized use, machine should be stored or parked with the key removed.
This machine is designed for level operation only. **Do not operate on ramps or inclines greater than 2%**.
This machine is not suitable for picking up hazardous dusts.
Use caution when moving this machine into areas that are below freezing temperatures. Any water in the tanks or hoses can cause damage to the machine.

FOR SAFETY WHEN SERVICING or MAINTAINING MACHINE

Stop on level surface.
Disconnect the power to the machine by unplugging the red Battery connector located under the recovery tank near the batteries.
Avoid moving parts. Do not wear loose jackets, shirts, or sleeves when working on machine.
Avoid contact with battery acid. Battery acid can cause burns. When working on or around batteries, wear protective clothing and safety glasses. Remove metal jewelry. Do not lay tools or metal objects on top of batteries.
Charging batteries generates explosive gasses.
Do not charge batteries when open flames or sparks are present. Do not smoke.
Make sure the charger is turned off before disconnecting it from the machine.
Charge the batteries in a well-ventilated area with the battery cover removed completely.
Do not clean machine with a pressure washer.
Authorized personnel must perform repairs and maintenance. Use Minuteman supplied replacement parts.

SAVE THESE INSTRUCTIONS

Manufacturer PDF Provided by www.southeasternequipment.net

Inspection

Carefully unpack and inspect your **E20 Walk-Behind Scrubber** for shipping damage. Follow unpacking instructions on shipping pallet. Each unit has been tested and thoroughly inspected before shipment. Any damage is the responsibility of the delivery carrier who should be notified immediately.

Electrical

This machine is battery operated and designed to operate on 24 volts DC (2) 12-volt batteries.

Batteries

We do not recommend mixing AMP hour capacities. Alternate battery sets can be used if they equal physical size and capacity. If alternate battery sets are used please contact Minuteman for on board charger settings.

Operator Responsibility

Read this manual carefully before operating this machine.

The operator is responsible for taking care of the daily maintenance and check ups of the machine to keep it in good working condition. The operator must inform the service mechanic or supervisor when the scheduled maintenance intervals are required as stated in the *MAINTENANCE* section of this manual.

Before starting familiarize yourself with the machine and its controls (see “Machine Overview, Front”, “Machine Overview, Rear”, “Control Console” diagrams).

Manufacturer PDF Provided by www.southeasternequipment.net

Machine Overview - Front

A	SPRAY BOTTLE / CUP HOLDER
B	SOLUTION FILL PORT
C	RECOVERY TANK LID
D	RECOVERY TANK
E	BRUSH DECK
F	FRONT WHEEL
G	REAR CASTER
H	SOLUTION TANK

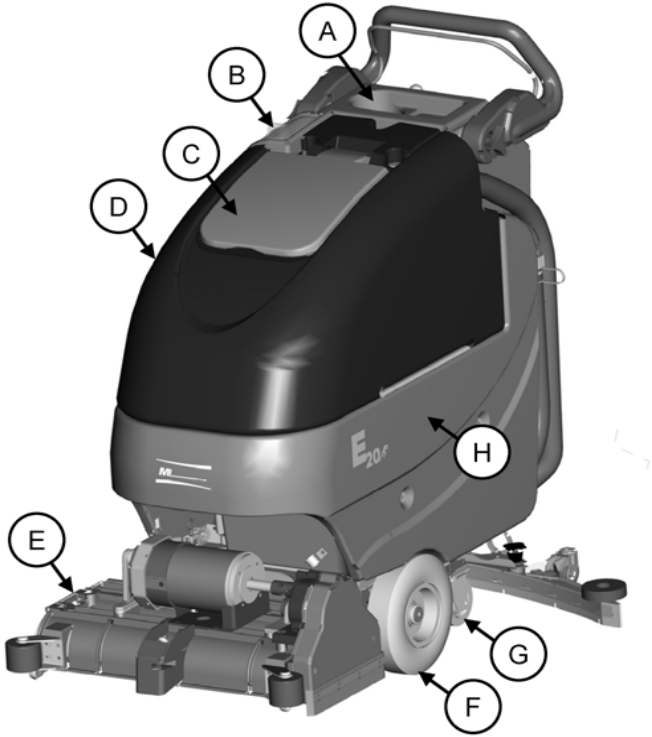

Manufacturer PDF Provided by www.southeasternequipment.net

Machine Overview - Rear

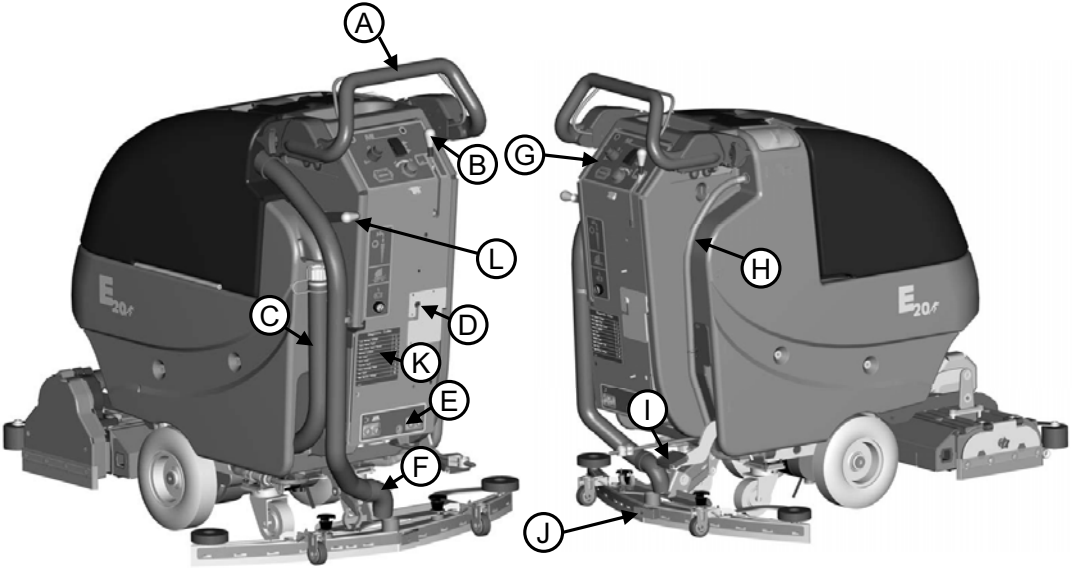

A	BAIL HANDLE	G	CONTROL PANEL
B	SQUEEGEE LIFT LEVER	H	SOLUTION TANK DRAIN HOSE / LEVEL INDICATOR
C	RECOVERY TANK DRAIN HOSE	I	BRUSH LIFT PEDAL
D	ONBOARD CHARGER CORD	J	REAR SQUEEGEE
E	CIRCUIT BREAKERS	K	DIAGNOSTIC CODE GUIDE
F	RECOVERY HOSE	L	SOLUTION CONTROL LEVER

Manufacturer PDF Provided by www.southeasternequipment.net

Controls

A	BAIL HANDLE
B	HANDLE ADJUSTMENT KNOB
C	KEY SWITCH
D	DIRECTION SWITCH
E	SQUEEGEE LIFT LEVER
F	BATTERY / FAULT GAUGE
G	SPEED CONTROL
H	CHARGE STATUS INDICATOR
I	SOLUTION CONTROL LEVER

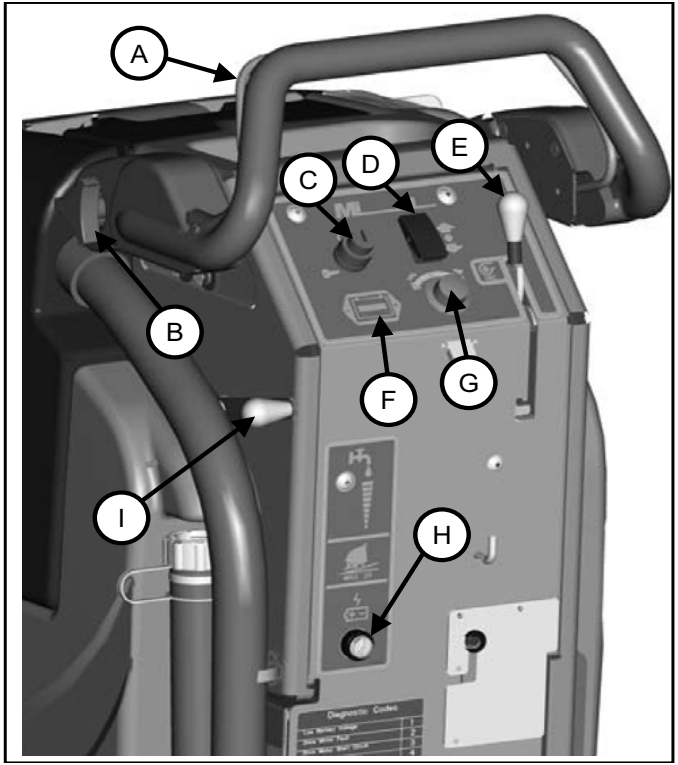

Manufacturer PDF Provided by www.southeasternequipment.net

Bail Handle
(A) When the scrub deck is lowered to the floor, the bail handle enables the brush and vacuum motors and moves the machine forward once depressed.

Handle Adjustment Knobs
(B) Allows the handle position to be raised or lowered.

Key Switch
(C) Controls the machine's power (Off/On) with a key for safety. When it is turned to the on position, the machine will operate.

Direction Switch
(D) This 3 position switch sets the direction the machine will move when the bail handle is engaged. The middle position is neutral - brushes & vacuum will operate but machine will not move.

Squeegee Lift Lever
(E) When moved to the top position, the squeegee is lowered and the vacuum motor will turn on when bail handle is engaged. When locked in the bottom position, the squeegee is raised and the vacuum motor shuts off (after a 10 second delay).

Battery / Fault Gauge
(F) This gauge displays the remaining battery charge. This gauge also displays any fault codes that might occur with the Drive Motor Controller (see Diagnostic Codes).

Speed Control
(G) This control sets the speed at which the machine will move.

Charge Status Indicator
(H) This gauge displays the status of the batteries during charging. The gauge has a readout of 3 LEDs. 1 Green, 1 yellow, 1 Red. Green indicating a full charge, Yellow indicating 80% charged, Red indicating the batteries are charging.

Solution Control Lever
(I) This lever controls the rate at which solution is dispensed. Moving the lever up will increase the amount of solution. Moving the lever down will decrease the amount. Moving the lever all the way down shuts off solution flow.

Manufacturer PDF Provided by www.southeasternequipment.net

Optional Hour Meter

Minuteman offers an optional hour meter for the E20. The optional kit replaces the power cord mounting bracket at the rear of the machine with one that contains an hour meter, which records the brush motor operating time.

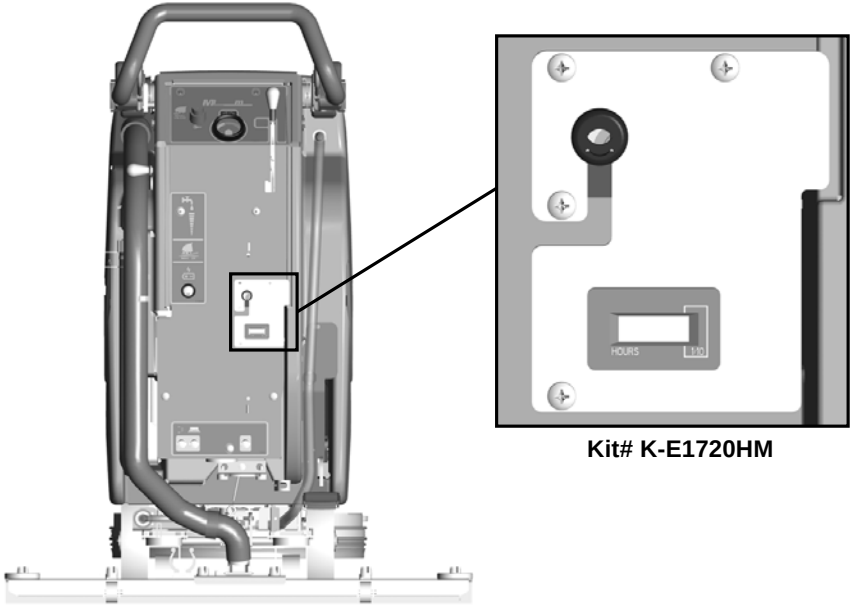

Kit# K-E1720HM

Manufacturer PDF Provided by www.southeasternequipment.net

Circuit Breakers

The circuit breakers are located at the bottom of the back panel of the machine.

A **Main Control Circuit Breaker - 4A**
B **Brush Motor Circuit Breaker - 30A**
C **Vacuum Motor Circuit Breaker - 20A**
D **Drive Motor Circuit Breaker - 20A**

If any of the functions above are not operating, check if the circuit breaker buttons have tripped. Press to reset.

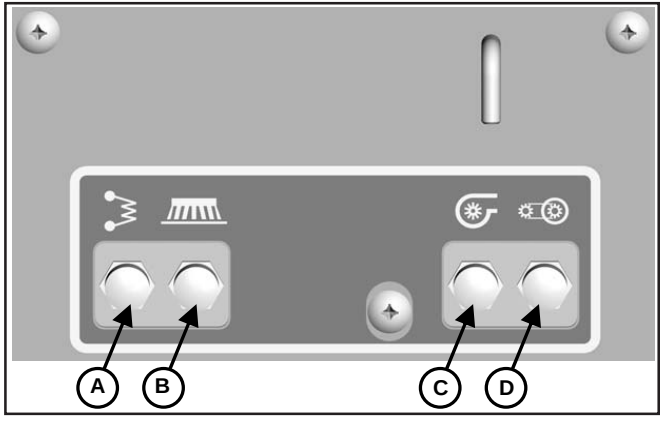

Manufacturer PDF Provided by www.southeasternequipment.net

Battery Compartment

The battery compartment is located under the recovery tank. The Battery compartment can be accessed for servicing and maintenance by tilting the recovery tank (make sure recovery tank has been drained before tilting). The battery compartment contains two 12-volt batteries connected in series. Connect the batteries according to the battery connection diagram (*see diagram*). The battery tray may be drained if necessary using the orange drain hose located above the rear caster on the right side of the machine.

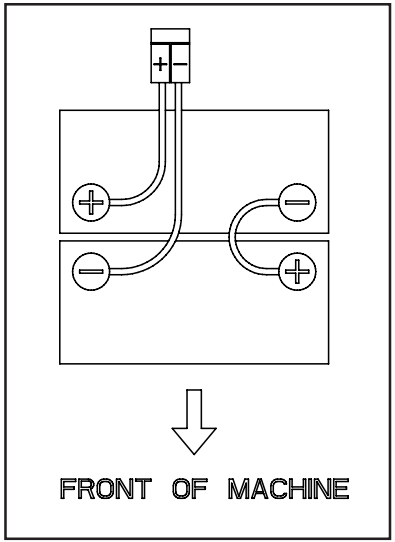

Manufacturer PDF Provided by www.southeasternequipment.net

Diagnostic Code Guide

When an error or fault occurs within the machine, a fault code will appear on the battery gauge represented by a specified number of flashing LEDs. (See “Troubleshooting” for further information)

Diagnostic Codes

The number of flashing bars on the battery gauge represent fault codes as indicated below:

Low Battery Voltage *Check condition of battery and connections*	**1**
Drive Motor Fault *Check all connections between the motor and controller*	**2**
Drive Motor Short Circuit *Motor has a short circuit to a battery connection. Contact Service Agent*	**3**
Battery Lockout *Battery voltage is too low, controller is preventing function. Charge Batteries*	**4**
Not Used	**5**
Drive Inhibit *Check battery charger, drive is inhibited when plugged in*	**6**
Throttle fault *Restart keyswitch-bail handle was activated prior to turning machine on*	**7**
Drive Controller Fault *Check all connections are secure*	**8**
Not Used	**9**
High battery voltage *Check condition of battery and connections*	**10**

Manufacturer PDF Provided by www.southeasternequipment.net

Handle Adjustment

The E20 handle was designed with operator comfort in mind. The angle and horizontal position of the handle can be adjusted to suit the needs of the operator.

Angle Adjustment

The handle angle can be adjusted without tools by loosening the **Angle Adjustment Knob (A)** on each side and rotating the handle to the desired position. There are 5 angular positions 11.25° apart for a total of 45° between the minimum and maximum position.

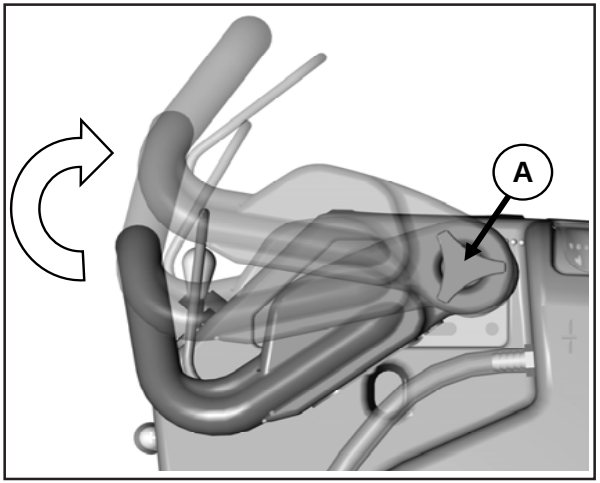

Manufacturer PDF Provided by www.southeasternequipment.net

Horizontal Adjustment

The horizontal position can be adjusted by removing the 4 **Mounting Bolts (B)** (2 each side) with a 9/16" socket and sliding the **Mounting Plate (P)** to one of the 3 available positions. The machine is shipped from the factory in position 1.

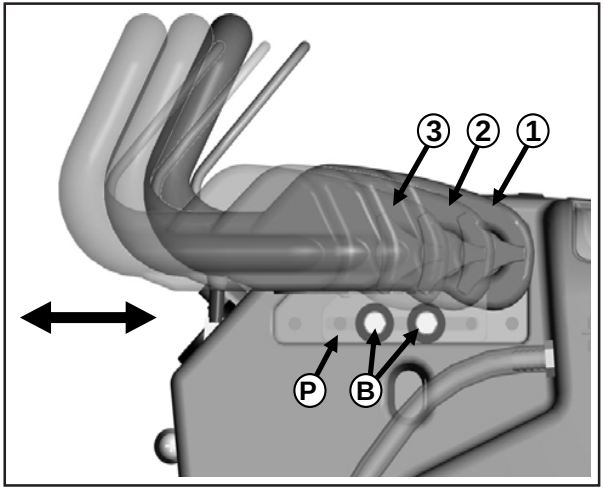

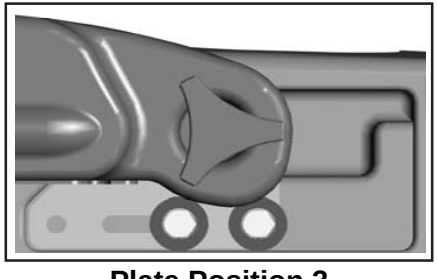

Plate Position 3
(Fully Extended)

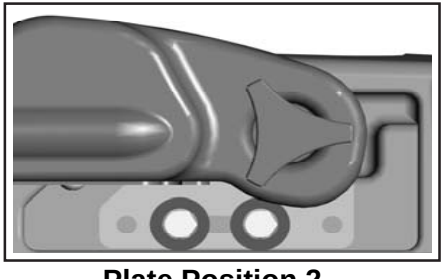

Plate Position 2

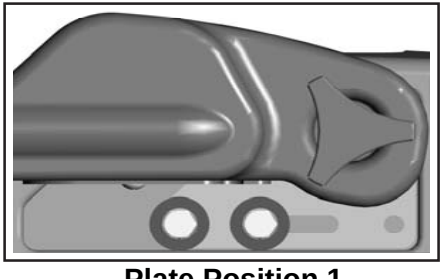

Plate Position 1
(Shipping Position)

Manufacturer PDF Provided by www.southeasternequipment.net

Solution Tank Drain Hose

The solution tank may be drained by removing the **Solution Tank Drain Hose (A)** from the **Hose Barb (B)** and routing the hose to a floor drain.

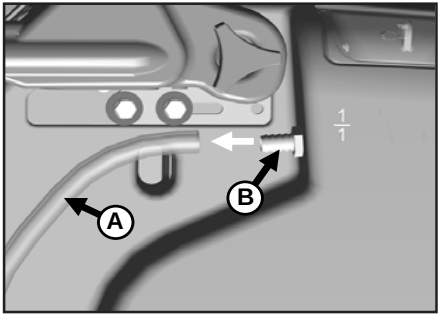

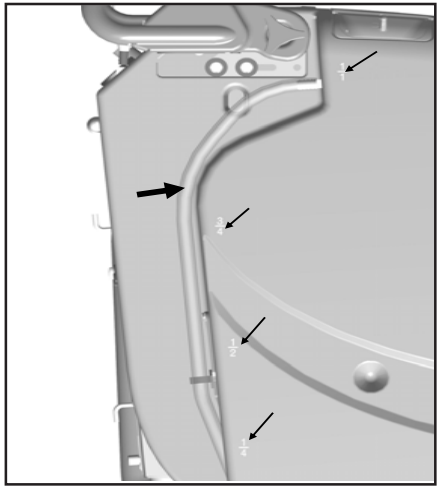

Solution Level Indicator

The Solution Tank Drain Hose also serves as a water level indicator for the solution tank. The amount of water remaining in the solution tank can be seen through the clear drain hose. Level markers molded into the solution tank are positioned at 1/4, 1/2, 3/4, and full levels.

Manufacturer PDF Provided by www.southeasternequipment.net

Solution Fill Filter

The **Solution Fill Filter (B)** should be cleaned regularly. To remove, simply open the **Solution Tank Lid (A)** and pull the filter out.

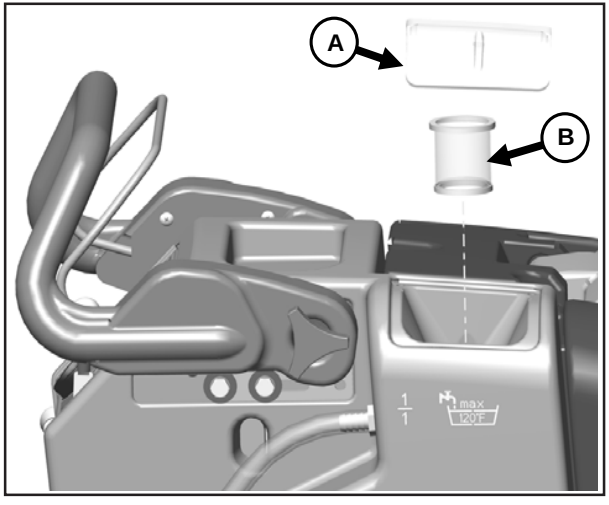

Recovery Tank Drain Hose

Twist Cap to Open and Drain

Twist & Lift cap to clean out large debris

Manufacturer PDF Provided by www.southeasternequipment.net

Screened Float

If the recovery tank **(C)** is overfilled or a large amount of foaming is present, the screened float **(B)** blocks the vacuum intake inside the tank protecting the vacuum motor and internal electronics from water damage. It is essential to keep the float in working order through regular maintenance.

The float should be cleaned daily by thoroughly rinsing with a hose. Removal of the screened float is not necessary for daily maintenance.

At least once a month the screened float should be completely removed, cleaned, and checked for any damage to the seal or metal screen.

WARNING: Damage to the machine may occur if operated without the screened float properly in place.

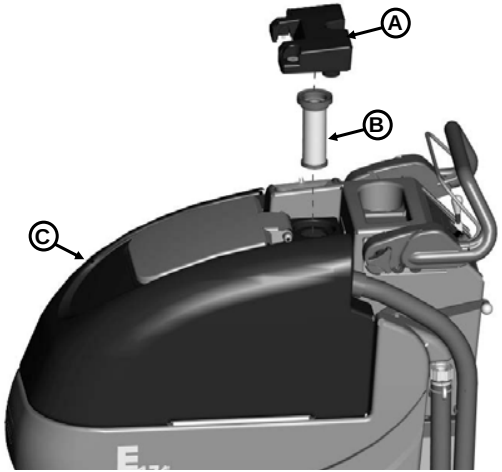

Manufacturer PDF Provided by www.southeasternequipment.net

Screened Float Removal

The screened float is positioned between the vacuum manifold **(A)** and recovery tank **(C)**. The screened float **(B)** can be accessed by removing the 1.5” bolt **(D)** and two 1.25” bolts **(E)** that attach the manifold to the recovery tank using a 7/16” socket.

A	**Vacuum Manifold**
B	**Screened Float**
C	**Recovery Tank**
D	**1.5” Bolt**
E	**1.25” Bolt (2)**
F	**Helical Washer (3)**
G	**Flat Washer (3)**

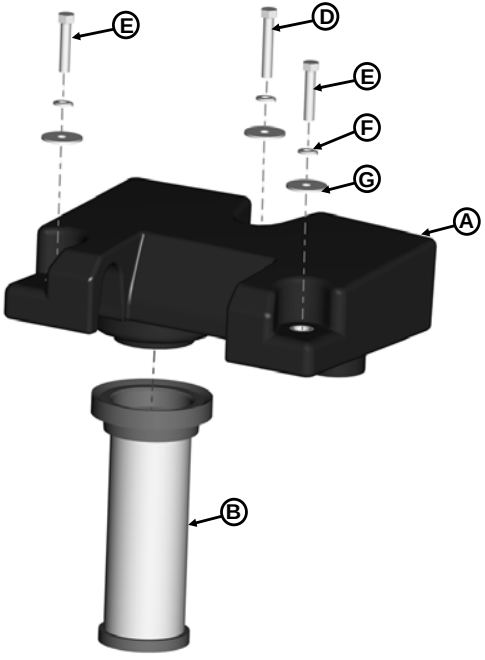

Manufacturer PDF Provided by www.southeasternequipment.net

In-Line Solution Filter Assembly

The pump and solution solenoid, which shuts off solution flow when the bail handle is released, are protected from debris by the in-line filter assembly. The filter assembly is located at the front of the machine above the brush deck. It is important to check and clean the screened washer inside the assembly regularly to ensure proper solution flow. After shutting off solution flow, unscrew the assembly (Note that the cone of the washer is facing away from the pump). Remove washer and rinse, reinsert and screw assembly together, tightening by hand. **Overtightening with tools may damage the plastic threads.**

A **Fitting, MGHT**
B **Screened Washer**
C **Hose Barb Insert**
D **Fitting, FGHT**

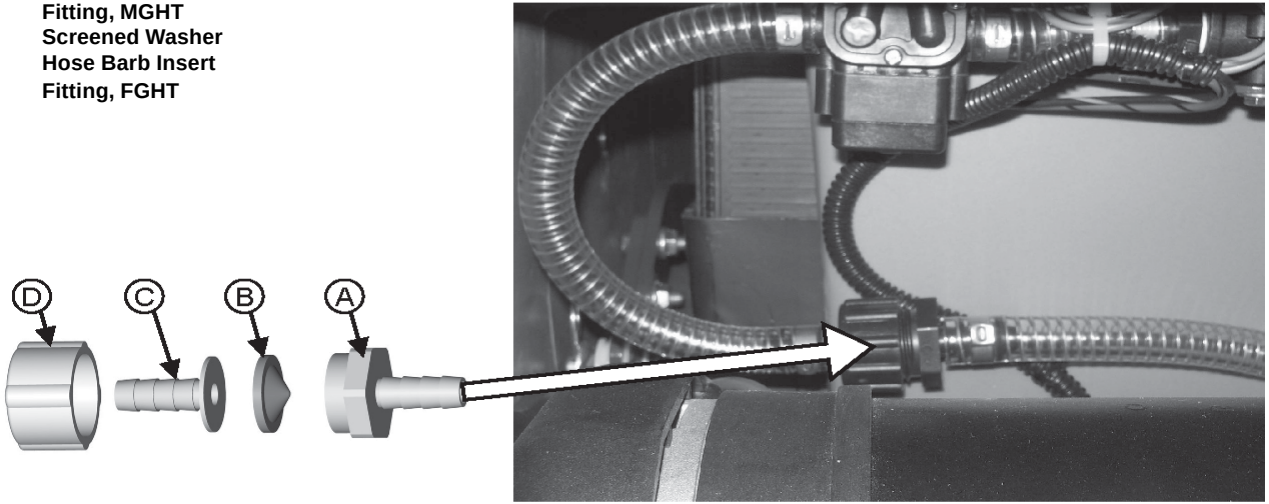

Manufacturer PDF Provided by www.southeasternequipment.net

Rear Squeegee

A Squeegee
B Star-shaped knob
C Adjusting screw for angle adjustment
D Suction hose
E Blade fastening latch
F Washers for caster height adjustment
G Caster Wheel Axle

Cleaning the Squeegee

Check the squeegee **(A)** daily and clean as necessary.
1. Pull off the suction hose **(D)**.
2. loosen the two star-shaped knobs **(B)**.
3. Remove the squeegee **(A)**.

Changing the Squeegee Blades

Check the inner and outer squeegee blades on the squeegee **(A)** weekly for signs of wear. The squeegee blades can be reused by turning them (can be turned for 4 total uses).
1. Pull off the suction hose **(D)**, loosen the two star-shaped knobs **(B)** and remove the squeegee.
2. Unlock the fastening device **(E)** and remove the outer squeegee blade. Turn the squeegee blade or install a new one, as necessary. Change the inner squeegee blade in the same way.

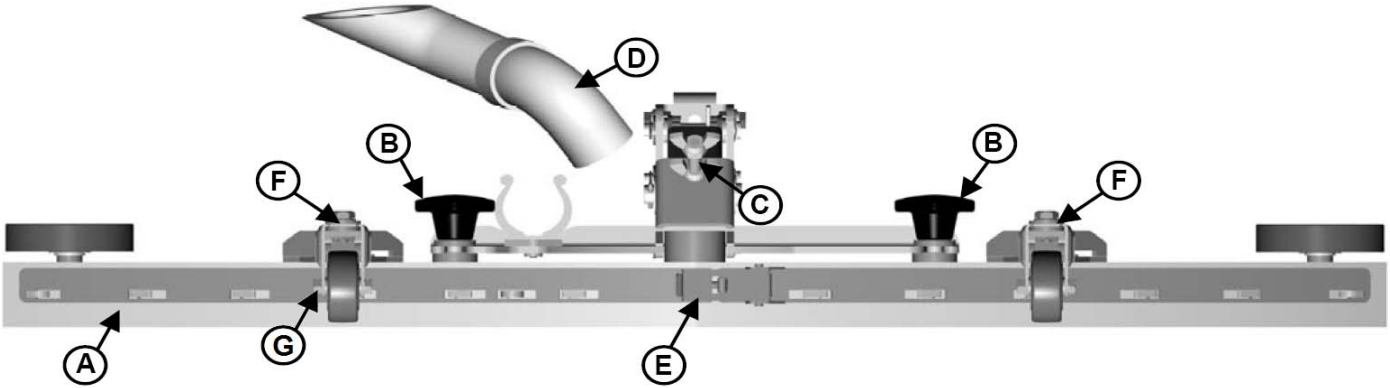

Manufacturer PDF Provided by www.southeasternequipment.net

Squeegee Blades Angle Adjustment

The angle adjustment is the decisive factor in ensuring that the squeegee blades on the squeegee lie evenly on the floor.

1. Park the machine on a level surface and lower the squeegee.
2. Loosen the lower wing nut **(B)** on the adjusting screw **(A)** and adjust the squeegee using the adjusting screw so that the ends of the squeegee blades still have contact with the floor. By turning the adjusting screw **(A)** counterclockwise, the clearance between squeegee blade and floor is **increased** in the center (Fig. 1). When turning the adjusting screw **(A)** clockwise, the clearance between squeegee blade and floor is **reduced** in the center (Fig. 2).
3. Switch the machine on and check the suction pattern. When the machine is in operation, the entire surface of the squeegee blades (center and outer areas) must be applied as evenly as possible.
4. Tighten the lower wing nut **(B)** on the adjusting screw **(A)** against the metal bracket to lock in the pitch setting.

1

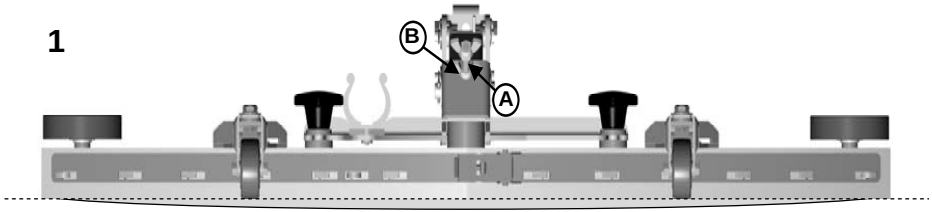

2

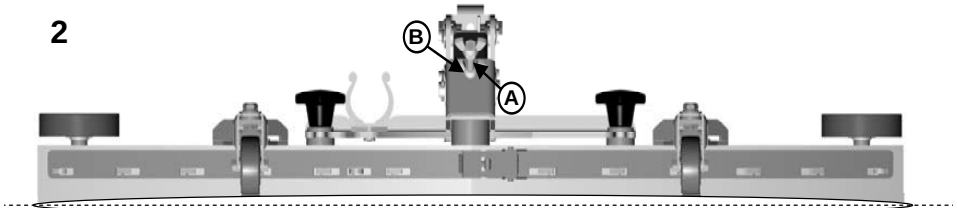

Manufacturer PDF Provided by www.southeasternequipment.net

Squeegee Blades Height Adjustment

If streaks are present, despite an optimum angle adjustment, the clearance between the caster wheels and floor must be adjusted by changing the number of washers underneath the bracket that holds the wheel. The squeegee height is preset at the factory to 2mm.

In cases of very uneven floors, e.g. grouted tile, etc., try 3mm illustration for washer configuration.
In cases of very uneven floors, e.g. poorly laid tiles (water does not run off), configure as shown in 4mm illustration.

Keep the extra washers by installing them above the bracket as shown.

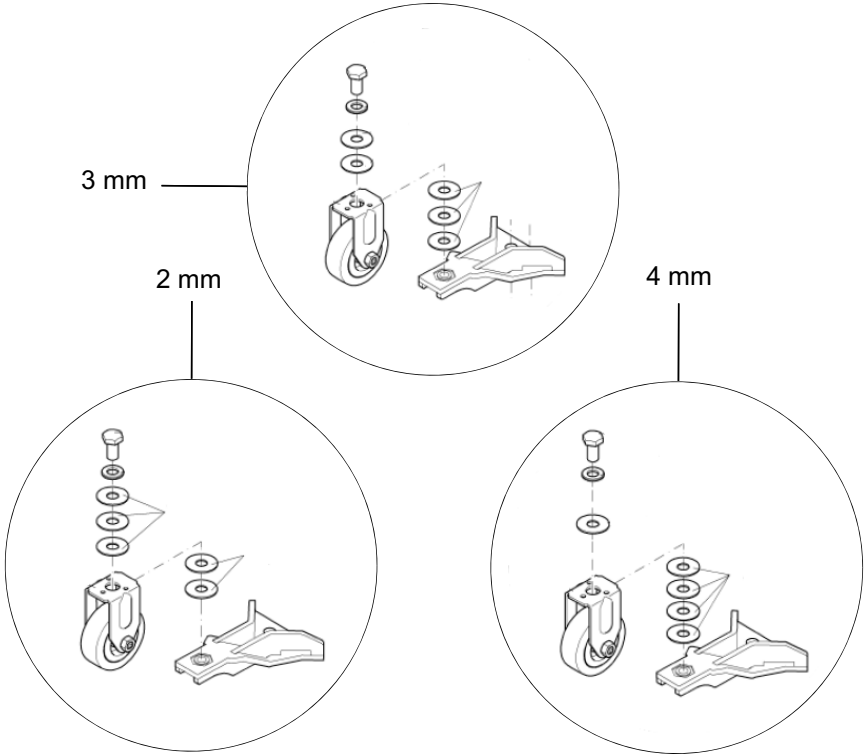

Manufacturer PDF Provided by www.southeasternequipment.net

Brush Deck Maintenance

Sprayjet Maintenance

The sprayjets deliver solution to the floor. The spray tip should be cleaned weekly to ensure good cleaning results.

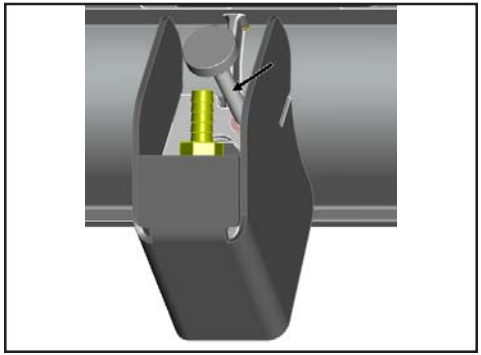

Figure 1

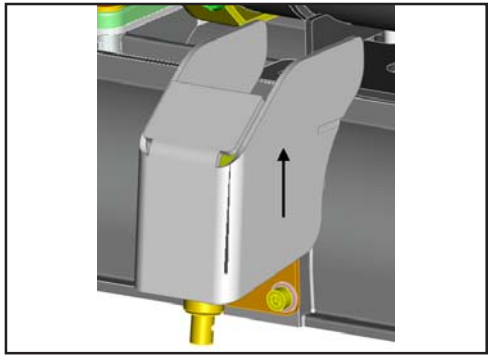

Figure 2

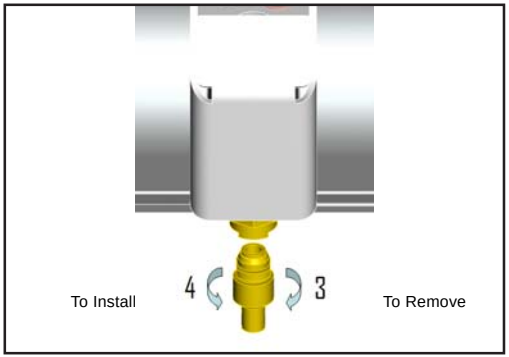

Figure 3

Spray tip removal and installation for cleaning

1. Remove knob located above sprayjet (Figure 1).
2. Pull sprayjet cover up and hold for easy access to spray tip (Figure 2).
3. Remove spray tip by hand by pushing the tip up into the nozzle body and rotate 1/4 turn clockwise (Figure 3).
4. Reinstall by pushing spray tip up into the nozzle body and rotate 1/4 turn counterclockwise until tip will not turn (Figure 3).
   NOTE: Ensure that the tip is facing toward the deck.

Manufacturer PDF Provided by www.southeasternequipment.net

Brush Deck Maintenance

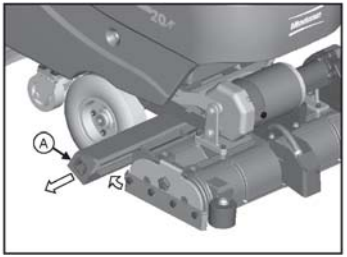

Debris Tray Maintenance

The **Debris Tray (A)** collects debris from the floor during operation. It must be cleaned regularly. Remove the tray from the deck by tilting the bottom up, then sliding it out to the side. Empty the tray and rinse it. Return the tray by sliding the top edge into the channel along the top-rear corner of the deck. The tray will fall into place when fully inserted.

Brush Loading / Unloading

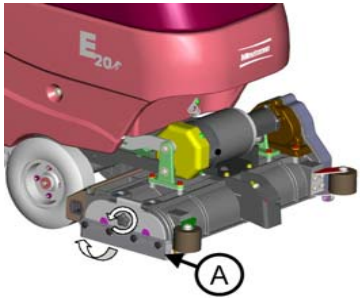

1. Raise brush deck. Unscrew the knob on the right side of the deck as shown above. Pull open the **Hinged Cover (A)**.

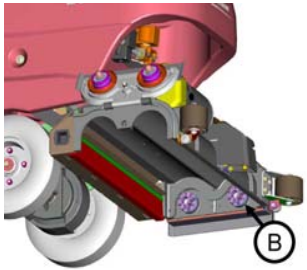

2. The drive side of each brush has a black end-cap with teeth. Insert the drive side of the brush through the opening until engaged on to the **Drive Hub (B)**.

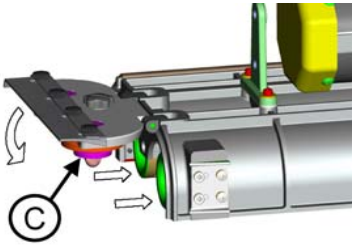

3. Insert **Idle Hubs (C)** into the brushes while closing the hinged cover. Tighten the knob on the cover by hand, ensuring that the hinged idle cover is flush to the deck.

Manufacturer PDF Provided by www.southeasternequipment.net

The E20 Cylindrical

This machine was designed with total operator comfort and ease of use in mind. All machine components have been designed as a total system to efficiently clean dirty floors. *Please contact your Minuteman representative for specific recommendations for the correct brush type and chemical applications.*

Before using the machine, always perform the following steps to ensure proper machine operation:

- Check under the machine for leaks.
- Check the rear squeegee for wear and damage.
- Check the solution and recovery tank levels.

After using the machine, always perform the following steps:

- Check the battery charge level. Charge batteries if necessary. When charging batteries, extra precaution is required:
  - Battery acid can cause burns.
  - When working on or around batteries, always wear protective clothing and safety glasses.
  - Remove metal jewelry. Do not lay tools or metal objects on top of the batteries.
  - Charging batteries generate explosive gasses.
  DO NOT CHARGE BATTERIES WHEN OPEN FLAMES OR SPARKS ARE PRESENT. DO NOT SMOKE.
  - Charge the batteries in a well-ventilated area.
  - Fluid levels should be checked before and after charging and maintained at the proper levels. If low, add distilled water until the metal plates are covered.
  - If the machine is not used for an extended period of time, batteries should be kept fully charged with a boost charge once a week.
- Check for wire, string, or twine wrapped around the scrub brushes.
- Check the rear squeegee for wear and damage.
- Check the rear squeegee suction hose for obstructions.
- Drain and rinse the recovery tank.
- Check under the machine for leaks.
- Check the service records to determine maintenance requirements.

Manufacturer PDF Provided by www.southeasternequipment.net

WARNING!
- Be sure you understand the machine controls and their functions.
- While on ramps or inclines, avoid sudden stops when tanks are filled.
- Avoid abrupt sharp turns. Slow down driving speed when going downhill.

Manufacturer PDF Provided by www.southeasternequipment.net

To Turn ON Machine
Turn key to operate position (I). Wait for battery gauge to stop flashing. (If flashing continues, see troubleshooting guide)

To Turn ON Vacuum
Lower squeegee into operating position, vacuum motor will turn ON when bail handle is engaged.

To Turn ON Brush Motor
Lower the scrub deck to the floor by moving the brush lift pedal from the “home” (down) position to the operating position (up). Depress the operator bail handle. Brush motor will turn ON.

To Turn on Cleaning Solution
Move solution lever from closed (down) position up to the desired flow position. With the scrub deck on the floor, depress the bail handle, solution will begin to flow.
Note: The solution solenoid will stop solution flow whenever the bail handle is released.

Direction Switch
Select direction of machine by moving the directional rocker switch from the neutral position to the forward or reverse position. The direction of the machine movement is shown on the operator panel with forward and reverse arrows.

Speed control
Move the speed dial to the desired position. Turning the dial clockwise increases the speed. Turning the dial counterclockwise decreases the speed.

Driving
Depress the operator bail handle, the machine will move in the direction selected.

Manufacturer PDF Provided by www.southeasternequipment.net

To Charge Batteries

When the battery / fault gauge reaches the red zone the batteries need to be recharged. Take the machine to a well ventilated area, unwind the battery charger power cord from the electrical box cover and plug into an appropriate power source. After approximately 10 seconds the battery charge status indicator will turn on.

For Wet batteries only: Check the battery water levels before each use, refill as needed with distilled water.

Caution: DO NOT OVERFILL. Fill water 1/4 " - 1/2" above the separators. Failure to maintain the batteries may result in battery failures.

WARNING: Charging batteries generates explosive gasses. Do not charge batteries when open flames or sparks are present. Do not smoke. Charge the batteries in a well-ventilated area .

Hour Meter (Optional)

Hour meter will automatically record operating time of the brush motor.

Manufacturer PDF Provided by www.southeasternequipment.net

After Use

1. When finished scrubbing, lift the scrub deck. Lift the rear squeegee (the vacuum motor will turn off after 10 seconds). Move the machine to a service area for daily maintenance and review items that may need service.
2. Remove debris tray from the brush deck, cleanout and rinse.
3. Empty the solution tank by disconnecting the **solution tank drain hose** from the barb fitting and routing hose to a drain. Rinse the tank with clean water to prevent any buildup of dried chemicals that could clog the plumbing.
4. Empty and clean the recovery tank by flushing with a hose. Be sure to also clean the float shut off screen.
5. Remove the **brushes** or pad holders and rinse them in warm water and hang to dry.
6. Remove the **rear squeegee and recovery hose**, rinse with warm water and reinstall after cleaning.
7. Check the **maintenance schedule** in the next section and perform any required maintenance before storing the machine.
8. Store the machine indoors in a clean dry place. Keep from freezing. Leave solution and recovery tank lids open for ventilation to prevent odor buildup.
9. Turn **Key switch** *OFF* **(O)** and remove key.

Manufacturer PDF Provided by www.southeasternequipment.net

Daily	Weekly	Monthly	Yearly
Charge Batteries	Inspect Brush Deck Side Skirts for Debris	Lubrication – Grease Fittings	Check Carbon Brushes
Check/Clean Tanks & Hoses	Inspect and Clean In-Line Solution Filter		
Check/Clean/Rotate the Brushes	Rinse off the underside of brush deck		
Check/Clean the Squeegee	Check Each Battery Cell(s) Water Level		
Check/Clean Vacuum Shut-Off Float in Recovery Tank	Inspect and Clean spray jet tip		
Clean the brush deck debris tray.			

Have a qualified service technician check the vacuum motor carbon motor brushes once a year or after 300 operating hours.
The brush motor and transaxle motor carbon brushes should be checked every 500 hours or once a year.
NOTE: Refer to the Service Manual for more detail on maintenance and service repairs.

Regularly scheduled lubrication of certain machine parts should be performed to insure trouble-free operation of the machine. *Apply a generous amount of grease into the fittings on the machine until grease seeps out around the bearings.* The grease points are listed below:

- *Rear caster swivel (2)*

Apply lubricant or light machine oil to lubricate the:

- *Pivot mounting point of the squeegee lift mechanism to the chassis (1)*
- *Rear squeegee caster wheel axle (2)*

Manufacturer PDF Provided by www.southeasternequipment.net

Problem	Possible Cause	Remedy
Poor water pick-up	Worn or torn squeegee blades	Rotate or replace blades
	Recovery tank full	Empty recovery tank
	Recovery tank drain hose leak	Secure drain hose cap or replace
	Recovery tank lid gasket leak	Replace gasket lid cover properly
	Debris caught in squeegee	Clean squeegee
	Recovery hose clogged	Remove debris and flush hose
	Recovery hose to squeegee or tank disconnected or damaged	Reconnect or replace recovery hose
Poor scrubbing performance	Worn brushes	Rotate or replace brushes
	Wrong brush or cleaning chemical	Consult Minuteman
	Debris caught on scrub brushes	Remove debris
	Moving machine too fast	Slow down
	Low battery charge	Recharge batteries
	Not using enough solution	Adjust solution flow setting
Inadequate solution flow or no solution to the floor	Solution tank empty	Fill solution tank
	Solution lines, filter or spray jet clogged	Flush lines, and clean solution filter and spray jet.
	Brush motor circuit breaker has tripped	Reset circuit breaker
	Pump may take up to 1 minute to push water after long periods of non-use	Run pump until solution flows.
	Solution Lever in down position	Raise lever up
Machine does not move	Squeegee is down and directional switch is in reverse position	Raise squeegee when in reverse mode
	Traction drive circuit breaker has tripped	Reset circuit breaker
	Batteries lost power	Recharge batteries
	Directional switch in neutral position	Activate FWD or REV position

Manufacturer PDF Provided by www.southeasternequipment.net

Problem	Possible Cause	Remedy
Machine does not operate	Tripped Control Power circuit breaker	Reset circuit breaker
	Batteries have low charge	Recharge batteries
	Battery charger operating	Unplug battery charger when charge is complete
	Key switch off	Turn key on
	Bail handle depressed too quickly after turning key on	Turn key off, turn on, wait until battery gauge lights up without flashing
Vacuum motor does not turn on	Recovery tank full	Empty recovery tank
	Excessive foaming in recovery tank.	Empty recovery tank. Rinse off the screened float inside recovery tank. Use less or change chemical. Use de-foaming agent.
	Squeegee in raised position	Lower squeegee
	Tripped vacuum motor circuit breaker	Reset breaker
	Broken vacuum limit switch	Replace switch
	Carbon Brushes worn	Replace carbon brushes
	Vacuum switch disconnected	Connect wiring
Batteries do not charge	Charger not plugged to wall outlet	Plug into wall outlet
	Circuit breaker tripped in wall outlet	Reset breaker
	Battery disconnected from machine	Connect battery to machine
	Charger malfunction	Call service
Brush deck vibration	Brushes may have flat spots from sitting for a long period of time on the floor	Rotate one of the brushes in the deck. Use machine for 30 minutes, flat spots will work themselves out.
	Debris in brushes	Remove debris from brushes.

Charger Warning Indicators		
	LED Status	**Description**
Warning	**RED LED lamp blink once**	Output open circuit or short circuit or reverse polarity connection of charger to battery. Battery voltage is too high (may be connected to wrong voltage battery).
	RED LED lamp blink twice	Abnormal cycle (may be weak or bad battery) Charging time has safety timed out due to battery problem.

Manufacturer PDF Provided by www.southeasternequipment.net

Fault / Diagnostic Codes

The Battery / Fault gauge will flash when a fault is detected. A decal labeled “Diagnostic Codes” is located below the battery gauge as an abbreviated and convenient guide to determine the cause of the fault and the remedy (refer to machine or see “Diagnostic Code Guide” section of this manual). The flashing codes are for the following:

The battery needs charging, there is a bad connection to the battery or dependent on programming, may indicate that the battery lockout function is active and the controller is in a restricted mode of operation. Check the connections to the battery. If the connections are good, try charging the battery.

There is a bad connection to the motor. Check all connections between the motor and the controller.

The motor has a short circuit to a battery connection. Contact your service agent.

The battery charge level has fallen below the Battery Lockout level and the controller is inhibiting certain machine functions. Charge the battery.

Manufacturer PDF Provided by www.southeasternequipment.net

Not used.

The controller is being inhibited from driving, this may be because the battery charger is connected.

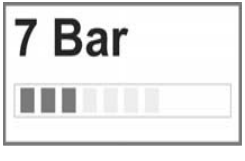

The bail handle was activated prior to turning the machine on. Make sure that the bail handle is in the rest position. Restart the key switch.

A controller fault is indicated. Make sure that all connections are secure.

Not used.

An excessive voltage has been applied to the controller. This is usually caused by a poor battery connection. Check the battery connections.

Manufacturer PDF Provided by www.southeasternequipment.net

Minuteman International Made Simple Commercial Limited Warranty

REVISION O EFFECTIVE 4/1/2016

Minuteman International, Inc. warrants to the original purchaser/user that the product is free from defects in workmanship and materials under normal use. Minuteman will, at its option, repair or replace without charge, parts that fail under normal use and service when operated and maintained in accordance with the applicable operation and instruction manuals. All warranty claims must be submitted through and approved by factory authorized repair stations.

This warranty does not apply to normal wear, or to items whose life is dependent on their use and care, such as belts, cords, switches, hoses, rubber parts, electrical motor components or adjustments. Parts manufactured by Minuteman are covered by and subject to the warranties and/or guarantees of their manufacturers. Please contact Minuteman for procedures in warranty claims against these manufacturers.

Special warning to purchaser -- Use of replacement filters and/or pre-filters not manufactured by Minuteman or its designated licensees, will void all warranties expressed or implied. A potential health hazard exists without original equipment replacement.

All warranted items become the sole property of Minuteman or its original manufacturer, whichever the case may be.

Minuteman disclaims any implied warranty, including the warranty of merchantability and the warranty of fitness for a particular purpose. Minuteman assumes no responsibility for any special, incidental or consequential damages.

This limited warranty is applicable only in the U.S.A. and Canada, and is extended only to the original user/purchaser of this product. Customers outside the U.S.A. and Canada should contact their local distributor for export warranty policies. Minuteman is not responsible for costs or repairs performed by persons other than those specifically authorized by Minuteman. This warranty does not apply to damage from transportation, alterations by unauthorized persons, misuse or abuse of the equipment, use of non-compatible chemicals, or damage to property, or loss of income due to malfunctions of the product.

If a difficulty develops with this machine, you should contact the dealer from whom it was purchased.

This warranty gives you specific legal rights, and you may have other rights which vary from state to state. Some states do not allow the exclusion or limitation of special, incidental or consequential damages, or limitations on how long an implied warranty lasts, so the above exclusions and limitations may not apply to you.

Manufacturer PDF Provided by www.southeasternequipment.net

Model	Parts	Labor	Poly	Travel**
Cord Electric Group	5yrs	3yrs	12yrs	90 days
Battery Operated Group	5yrs	3yrs	12yrs	90 days

Exceptions…….

Model	Parts	Labor	Poly	Travel**
Port A Scrub, all models	1yr	6months	12yrs	90 days
A3S Blower	1yr	1yr	0	0
Phenom Dual Motor Upright Vacuums	2yrs	2yrs	0	0
Explosion Proof Vacuum	1yr	1yr	0	0
Propane Burnisher	1yr	1yr	0	90 days
				**Travel, 2 hours max

Stand-alone Battery Chargers:	One year
Replacement Parts:	Ninety days
Batteries:	0-3 months full replacement, 4-12 months pro-rate
Polypropylene Plastic Tanks:	12yr warranty, no additional labor

Minuteman®
Excellence Meets Clean

Minuteman International · 14N845 U.S. Route 20 · Pingree Grove, Illinois 60140 USA
Phone 630-627-6900 · Fax 630-627-1130
www.minutemanintl.com
A Member of the Hako Group

Manufacturer PDF Provided by www.southeasternequipment.net

988728UM
Rev D 07/16