Manufacturer PDF Provided by www.southeasternequipment.net

Minuteman®
Excellence Meets Clean

E17/E20/H20 Floor Scrubber Disc Traction Drive

Minuteman International, Inc.
A Member of the Hako Group

988721 Rev H 07/20

Manufacturer PDF Provided by www.southeasternequipment.net

Manufacturer PDF Provided by www.southeasternequipment.net

PREFACE

Thank you for your purchase of the new industry standard for scrubbers. Minuteman International takes great pride in offering the most dependable, reliable and best value in industrial power sweepers and sweeper / scrubbers. We set the standard.

Our Customer Service Department would like to hear from you. If you see any errors, omissions or something that needs clarification in this Parts Catalog please let us know. We are working hard towards continually improving our processes to bring you the best you deserve. Please copy the form below, fill out and comment on how you found our catalog.

Thank you!
The Minuteman International Team

Name: _____

Title: _____

Company Name: _____

Address: _____

Country: _____

Type of equipment or model number: _____

Comments: _____

_____

_____

_____

Please return to:

Customer Service Manager
Minuteman International, Inc.
14N845 U.S. Route 20
Pingree Grove, Illinois 60140 USA

Phone: (800) 323-9420
Email: tech@minutemanintl.com

Manufacturer PDF Provided by www.southeasternequipment.net

Technical Specifications

Model ***E17 / E20 / H20 Traction Drive***

All models beginning with: E17TD / E20DTD / H20DTD

	E17	E20 / H20
Current (Max)	38 amps	40 amps
Sound Level	69 dBA	69 dBA / 65.5 dBA
Cleaning path width	17 in (43 cm)	20 in (51 cm)
Squeegee width	30 in (76 cm)	34 in (86 cm)
Productivity	23,120 ft^2/hr (2,147 m^2)	27,200 ft^2/hr (2,527 m^2)
Working speed	3.1 mph (5 km per hr)	3.1 mph (5 km per hr)
Transport Speed	3 mph (4.8 km per hr)	3 mph (4.8 km per hr)
Rated voltage	24 volts	24 volts
Vacuum flow	65 cfm (110 m^3/hr)	65 cfm (110 m3/hr)
Vacuum waterlift	45” (112mbar)	45” (112 mbar) / 46” (115 mbar)
Vacuum power	.60 HP (450 W)	.60 HP (450 W)
Brush type	Disc	Disc
Brush motor(s) power	3/4 HP (560W)	3/4 HP (560W)
Number of brushes	1	1
Brush RPM	180 RPM	180 RPM
Aqua-Stop equipped	Coming Soon	Coming Soon
Solution capacity	12Gal (45 liters)	12 Gal (45 liters)
Recovery capacity	13 Gal (49 liters)	13 Gal (49 liters)
Working Grade	2%	2%
Weight with batteries	365 lbs (166 kg)	372 lbs (169 kg)
Weight without batteries	231 lbs (105 kg)	238 lbs (108 kg)
Dimensions (LxWxH)	44.4 x 18.8 x 42.3 (112.8 x 47.8 x 107.4 cm)	47.4 x 21.3 x 42.3 (120.4 x 54.1 107.4 cm)
Drive Motor Power	1/5 HP (150W)	1/5 HP (150W)

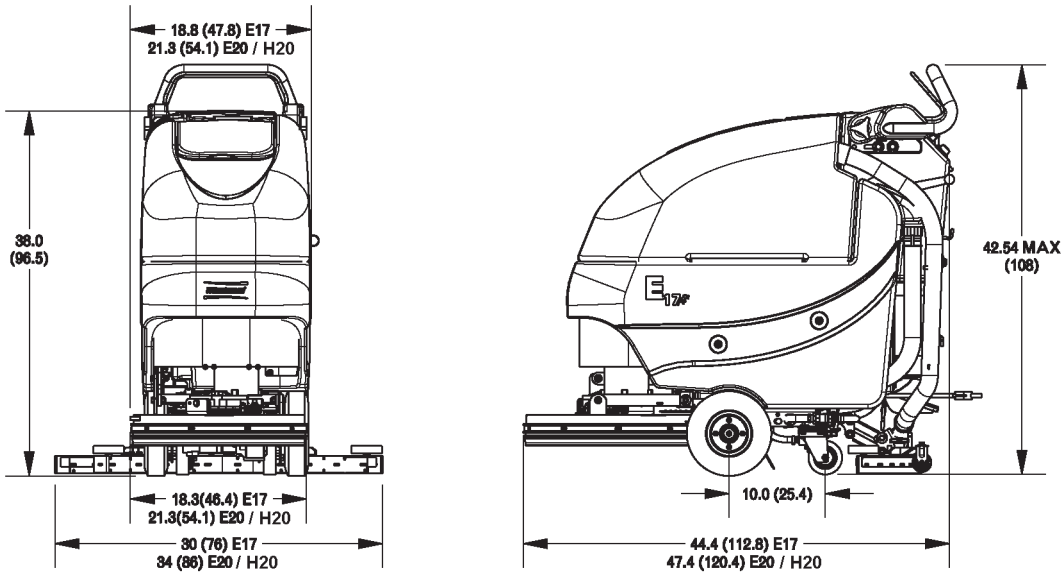

For Safety When Servicing or Maintaining Machine

- Stop on level surface.
- Disconnect the power to the machine by pulling the red Battery Connector located under the recovery tank near the batteries.
- Avoid moving parts. Do not wear loose jackets, shirts, or sleeves when working on machine.
- Avoid contact with battery acid. Battery acid can cause burns. When working on or around batteries, wear protective clothing and safety glasses. Remove metal jewelry. Do not lay tools or metal objects on top of batteries.
- Do not clean machine with a pressure washer.
- Authorized personnel must perform repairs and maintenance. Use Minuteman supplied replacement parts.

Manufacturer PDF Provided by www.southeasternequipment.net

Brush Options

BRUSH OPTIONS E17			
		AQUA STOP BRUSHES	
762394	PAD RETAINER, FIXED - NOT SHOWN	7943-01	BRUSH, 17” LIGHT-MEDIUM PP.5 A/S, (WHITE)
762370	PAD RETAINER, REMOVEABLE - NOT SHOWN	7943-02	BRUSH, 17” LIGHT-MEDIUM A/S K901 (BLACK)
172517-1	BRUSH-DISC, 17” NYLON, BLACK	7943-03	BRUSH, 17” MEDIUM NYLON 600GR. A/S, (GREY)
172517-3	BRUSH-DISC, 17” NYLO-GRIT 80GR GREEN	7943-04	BRUSH, 17” MEDIUM-HEAVY PP.8 A/S (WHITE)
172517-6	BRUSH-DISC 17”SCRUB GRIT II 120GR	7943-05	BRUSH, 17” HEAVY NYLON 180GR. A/S (GRAY)
		7943-06	BRUSH, 17” HEAVY-2 NYL 120GR. A/S, GREEN

Note: Models with the black tri-lobe brush hub will require the conversion kit part number K-E1720HUB before using the brushes listed above

BRUSH OPTIONS E20/H20			
		AQUA STOP BRUSHES	
762394	PAD RETAINER, FIXED - NOT SHOWN	7951-01	BRUSH, 20” LIGHT-MED PP.5 A/S, WHITE
762370	PAD RETAINER, REMOVEABLE - NOT SHOWN	7951-02	BRUSH, 20” LIGHT-MEDIUM A/S, K901, BLACK
172520-1	BRUSH, 20" NYLON	7951-03	BRUSH, 20” MEDIUM NYLON 600GR. A/S, GREY
172520-3	BRUSH-DISC, 20" NYLO-GRIT 80GR, GREEN	7951-04	BRUSH, 20” MEDIUM-HEAVY PP.8 A/S, WHITE
172520-6	DISC BRUSH 20", SCRUB GRIT 2, 120GR RED	7951-05	BRUSH, 20” HEAVY NYLON 180GR. A/S, GREY
		7951-06	BRUSH, 20” HEAVY-2 NYL 120GR. A/S, GREEN

Manufacturer PDF Provided by www.southeasternequipment.net

Table of Contents

Technical Specifications 4
Brush Options 5
Main Assembly E17 8
Main Assembly E17 BOM 9
Main Assembly E20/H20 10
Main Assembly E20/H20 BOM 11
Traction Drive Base Assembly 12
Traction Drive Base Assembly BOM 13
E17/20 Base Assembly 14
E17/20/H20 Base Assembly BOM 15
Chassis Assembly 16
Chassis Assembly BOM 17
Solenoid Assembly 18
Old Style - Solution Valve Assembly 19
New Style - Solution Valve Assembly 19
Solution Control Handle Assembly 20
Solution Control Handle Assembly BOM 21
Solution Tank Assembly 22
Lift Pedal Stop Assembly 23
Battery Tray Assembly 24
Recovery Tank Assembly 26
Recovery Tank Assembly BOM 27
Handle Assembly 28
Handle Assembly BOM 29
Electrical Box Assembly 30
Electrical Box Assembly BOM 31
Electrical Panel Assembly 32
Vacuum Switch Assembly 33
Electrical Box Cover Assembly 34
Vac Motor Assembly 36
E17/20 Brush Hub Assembly 37
17” Brush Deck Assembly 38
17” Brush Deck Assembly BOM 39

Manufacturer PDF Provided by www.southeasternequipment.net

20” Brush Deck Assembly 40
20” Brush Deck Assembly BOM 41
E17 Rear Squeegee Assembly 42
E17 Rear Squeegee Assembly BOM 43
E20 Rear Squeegee Assembly 44
E20/H20 Rear Squeegee Assembly (Curved) BOM 45
E17 Tension Band Sub-Assembly 46
E20 Tension Band Sub-Assembly 47
Squeegee Mechanism Assembly 48
E17/E20/H20 Squeegee Mechanism Assembly BOM 49
Wiring Diagrams 50
Warranty 54

Manufacturer PDF Provided by www.southeasternequipment.net

Main Assembly E17

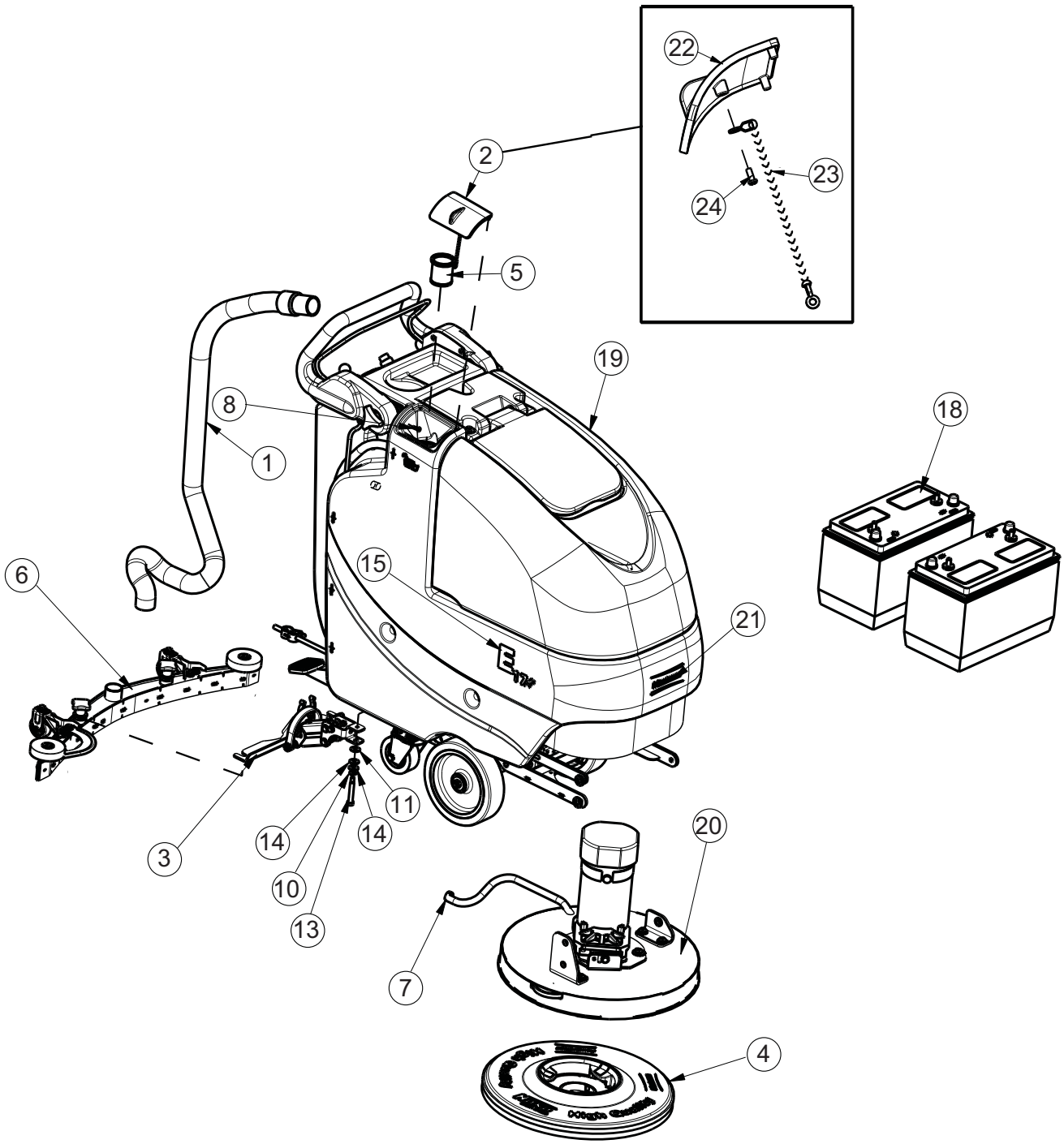

Manufacturer PDF Provided by www.southeasternequipment.net

Main Assembly E17 BOM

ITEM	PART NO.	QTY	DESCRIPTION
1	172010	1	HOSE, CLEAR VAC W/ 90 CUFF
2	172018	1	SOLUTION TANK LID ASSY
3	172150	1	SQUEEGEE LIFT MECH ASSY
4	172517-2	1	PAD DRIVER, 17” MM/HAKO
5	172159	1	FILTER, FILL PORT, ES1720
6	172530	1	SQUEEGEE ASSY, 30" (760mm) CURVED
7	450076	1	CLAMP-CRIMP 185R SS
8	711118	1	SCR-ST-A 10 X SI PL
10	711523	1	WSR-WAVE SIX .66 X .08
11	711569	1	WSR-FLT .390 X .880 X .062 NYL
13	712143	1	BLT-SHLD 3/8 X 2.0, 5/16-18
14	712301	2	WSR-FLAT SI X .87 X .06
15	715917	2	DECAL, E17
16	748480	1	BATTERY CABLE - POSITIVE (NOT SHOWN)
17	748481	1	BATTERY CABLE - NEGATIVE (NOT SHOWN)
18	956704	2	BATTERY, 12V 155AH
	956157		BATTERY, 12V 102AH AGM
19	172001TD-120	1	TRAC ORV BASE ASSY-120V CHARGER
20	172090TD	1	TD BRUSH DECK ASSY 17"
21	715914W	1	DECAL, MINUTEMAN W/SWOOSHES, GREY
24	172008	1	SOLUTION TANK LID
25	172123	1	CHAIN, BEADED SS W/ EYELETS
26	712145	1	SCR-PAN HD HI/L06-19 X SI SS
20G	956100	2	GEL BATTERY 12V 100AH
20T	956754	2	BATTERY 12V 105AH WET TROJAN
21	172001BD-120	1	BRUSH DRVMAIN ASSY-120V CHARGER
21CE	172001BD-230	1	BRUSH DRVMAIN ASSY-230V CHARGER
22	712099PLT	3	BLT- SHLDR 1/2 X 1/2 ZINC PLT
23	715914W	1	DECAL, MINUTEMAN W/SWOOSHES, WHITE
24	172008	1	SOLUTION TANK LID
25	172123	1	CHAIN, BEADED SS W/EYELET S
26	712145	1	SCR-MC 6-32 X .37 PPH SS

Manufacturer PDF Provided by www.southeasternequipment.net

Main Assembly E20/H20

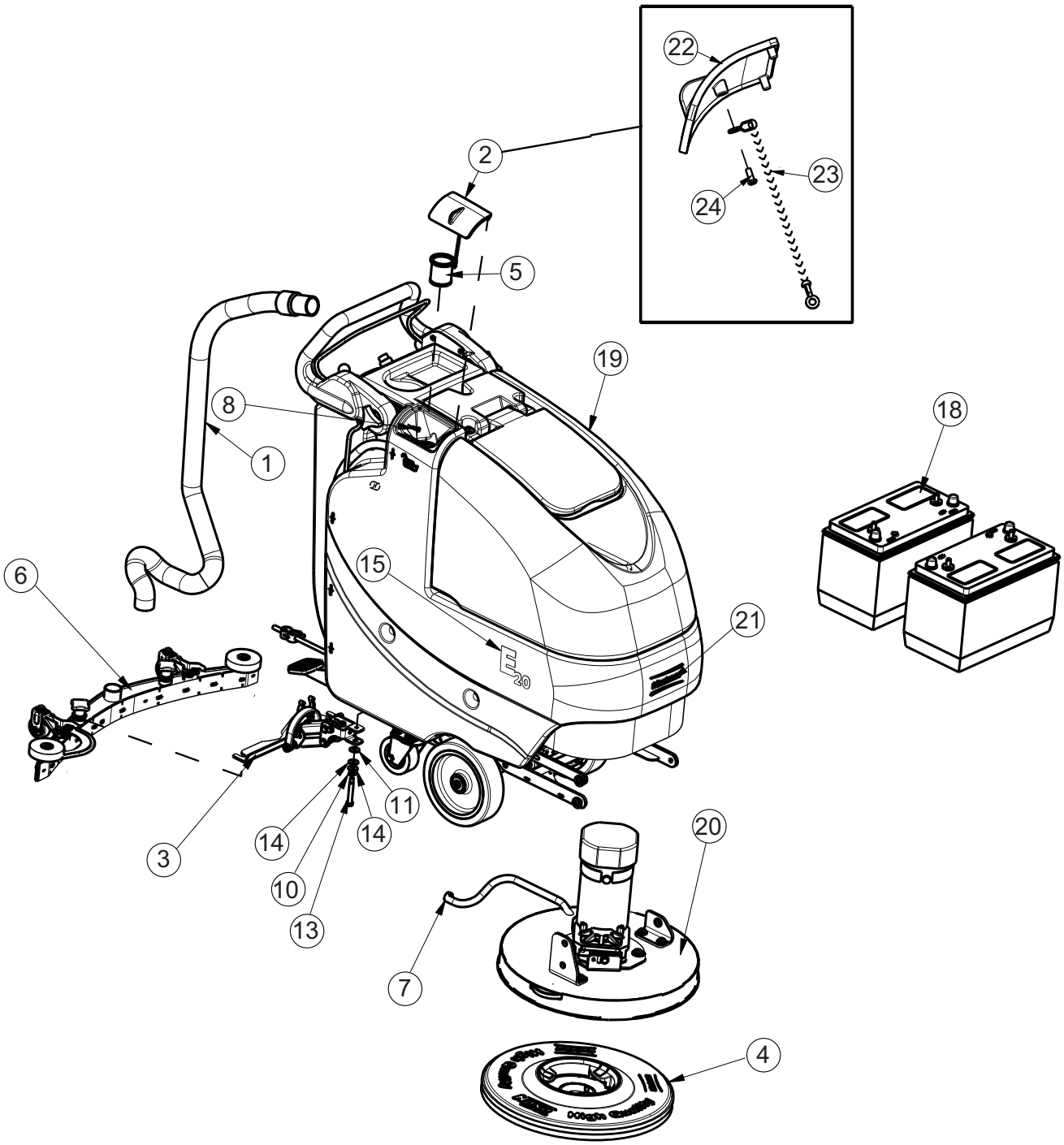

Manufacturer PDF Provided by www.southeasternequipment.net

Main Assembly E20/H20 BOM

ITEM	PART NO.	QTY	DESCRIPTION
1	172010	1	HOSE, CLEAR VAC W/ 45 CUFF
	172340		HOSE, PU CLEAR W/ 45 CUFF (CE AND H20)
2	172018	1	SOLUTION TANK LID ASSY
3	172150	1	SQUEEGEE LIFT MECH ASSY
4	172520-2		PAD DRIVER, 20"
5	172159	1	FILTER, FILL PORT, ES1720
6	172534	1	SQUEEGEE ASSY, 34" (860) CURVED
7	450076	1	CLAMP-CRIMP 185R SS
8	711118	1	SCR-ST-A 10 X .75 SS
10	711523	1	WSR-WAVE .37X .68 X .08
11	711569	1	WSR-FLT .390 X .880 X .062 NYL
13	712143	1	BLT-SHLD 3/8 X 2.0, 5/16-18
14	712301	2	WSR-FLAT .37 X .87 X .06
15	715920	2	DECAL, E20
	715684		DECAL, H20
16	748480	1	BATTERY CABLE - POSITIVE (NOT SHOWN)
17	748481	1	BATTERY CABLE - NEGATIVE (NOT SHOWN)
18	956704	2	BATTERY, 12V 155AH
	956157		BATTERY, 12V 102AH AGM
19	172001TD-120	1	TRAC DRV BASE ASSY-120V CHARGER
19A	172001TD-230	1	TRAC DRV BASE ASSY-230V CHARGER
20	172100TD	1	TD BRUSH DECK ASSY 20"
21	715914W	1	DECAL, MINUTEMAN W/SWOOSHES, WHITE
24	172008	1	SOLUTION TANK LID
25	172123	1	CHAIN, BEADED SS W/ EYELETS
26	712145	1	SCR-PAN HD HI/LO 6-19 X .37SS
23	715914W	1	DECAL, MINUTEMAN W/SWOOSHES, WHITE
24	172008	1	SOLUTION TANK LID
25	172123	1	CHAIN, BEADED SS W/EYELETS
26	712145	1	SCR-MC 6-32 X .37 PPH SS

Manufacturer PDF Provided by www.southeasternequipment.net

Traction Drive Base Assembly

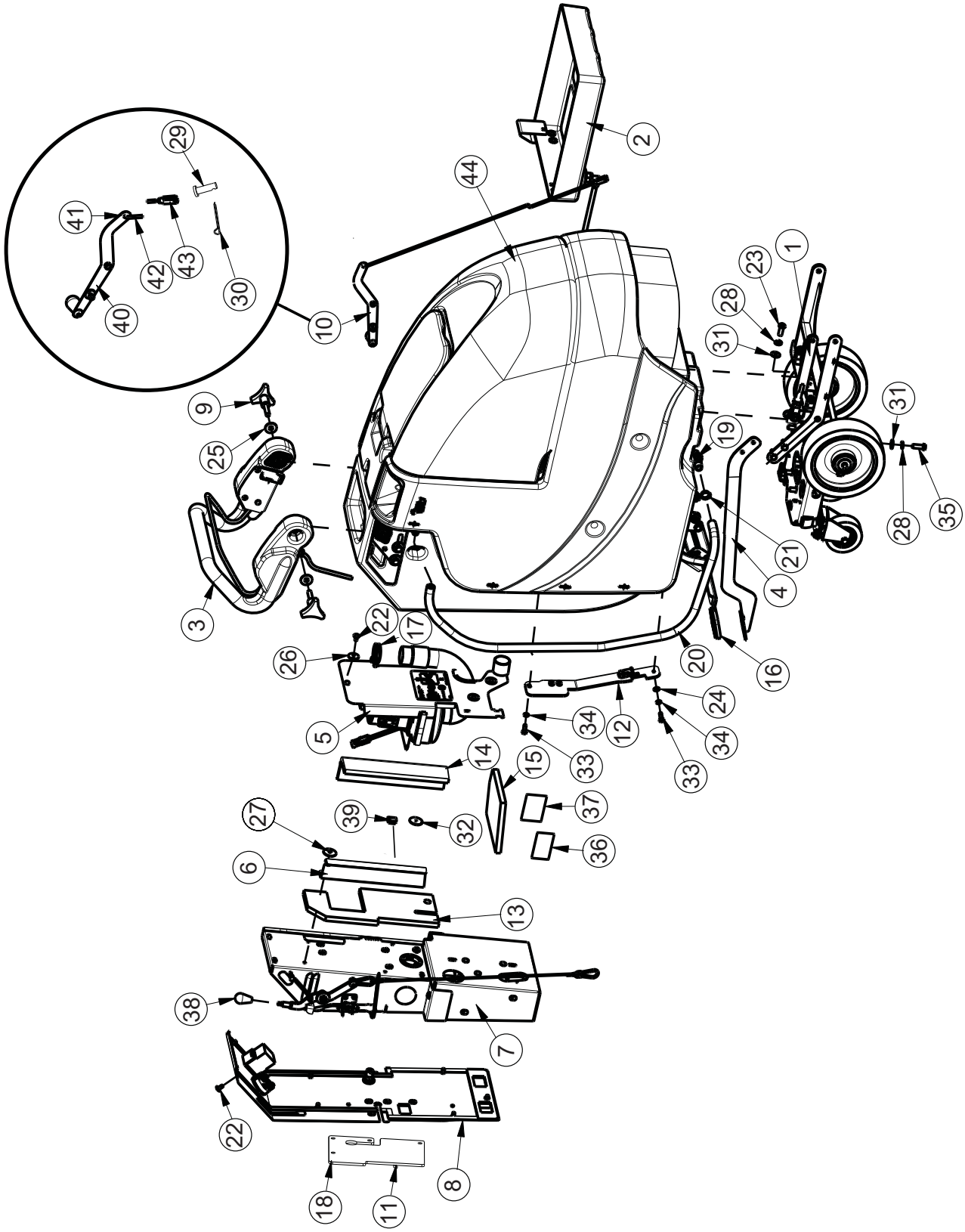

Manufacturer PDF Provided by www.southeasternequipment.net

Traction Drive Base Assembly BOM

BILL OF MATERIAL - 172001TD - 120/230							
ITEM	PART NO	QTY	DESCRIPTION	ITEM	PART NO	QTY	DESCRIPTION
1	172009	1	TD CHASSIS ASSY, ES1720	23	710985	2	SCR-SC 3/8-16 X .62 ST PL
2	172012	1	BATTERY TRAY ASSY	24	711504	2	WSR-FLAT 1/4 ID SS
3	172015	1	E1720 TD HANDLE ASSY	25	711507	2	WSR-FLAT .37 X 1.12 X .06
4	172032	1	LIFT PEDAL WMT	26	711519	3	WSR- FLAT .25 X 1.01 X .06
5	172050	1	VAC MOTOR ASSY	27	711543	1	WSR-HELICAL #10
6	172055	1	BKT, VAC AREA INSIDE COVER	28	711546	6	WSR-HELICAL 3/8
7	172075-120	1	ELEC BOX TD ASSY 120V	29	711803	1	COTTER PIN-HAIR
7A	172075-230	1	ELEC BOX TD ASSY 230V	30	712117	1	CLEVIS PIN
8	172079	1	TD ELEC BOX COVER ASSY	31	712301	6	WSR-FLAT .37 X .87 X .06
9	172085	2	KNOB, 3/8-16 STUD, 3 LOBE	32	712312	2	WSR-FLAT .187 X 1.25
10	172112	1	SOL CONTROL ASSY	33	712562	2	BOLT-HH 1/4-20X3/4 SS
11	172129	1	BKT, PWR CORD MOUNT	34	712758	2	WSR-HELICAL 1/4 SS
12	172166	1	TD LIFT PEDAL BKT ASSY	35	713042	4	BLT-HH 3/8-16 X 1 #5
13	172184	1	FOAM COVER, REAR 1	36	715029	1	DECAL-NAME PLATE SERIAL
14	172185	1	FOAM COVER, REAR 2	37	715047	1	DECAL-CLEAR LAMINATE 2X3
15	172187	1	FOAM COVER, FRONT 2	38	760592	1	KNOB, OVAL TAPERED
16	210142	1	PEDAL PAD	39	809443	1	CLIP-WIRE & CORD
17	3303255	1	CLAMP-HOSE 1.75 DIA NOMINAL	40	172115	1	SOL CNTRL LEVER ASSY
18	293080	1	STRAIN RELIEF-HEYCO 1207	41	172122	1	NUT, PUSH-ON WSR CAP, 3/16
19	342440	1	FITTING, TEE 3/4MPT 1/2 BARB PP	42	172069	1	ROD, SOL. CTRL, ES1720
20	430156	1	HOSE, 1/2 X 42 CLEAR	43	172062	1	YOKE, 3/16 CLEVIS, 10-32, LONG
21	450093	2	CRIMP CLAMP 3/4" STEPLESS	44	172001BASE	1	ES1720 BASE ASSY
22	710178	10	SCR-MC 1/4-20 X .50 TRUSS STPL				

Manufacturer PDF Provided by www.southeasternequipment.net

E17/20 Base Assembly

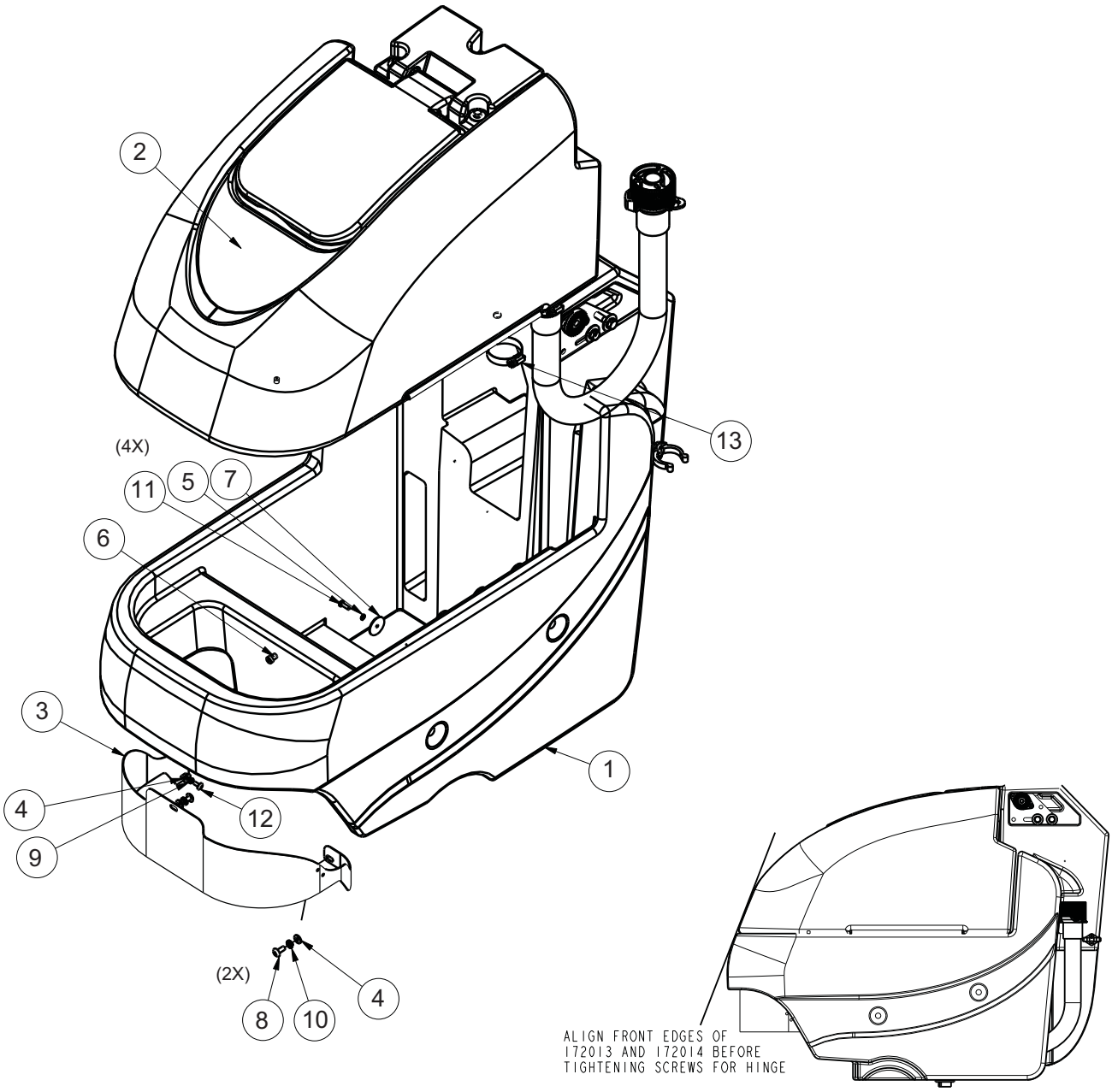

Manufacturer PDF Provided by www.southeasternequipment.net

E17/20/H20 Base Assembly BOM

BILL OF MATERIAL - 172001BASE			
ITEM	PART NO.	QTY	DESCRIPTION
1	172013	1	SOLUTION TANK ASSY
2	172014	1	RECOVERY TANK ASSEMBLY
3	172144	1	COVER, FRONT PANEL E1720
4	711504	3	WASHER-FLAT 1/4 SS
5	711543	4	WASHER-LOCK #10 SPLIT ZP
6	712041	1	BLT-SHOULDER 5/16 X .375 LG X 1/4-20 BLK
7	712312	4	WASHER-BALANCING .187 X 1.25
8	712565	2	SCR-THMS 1/4-20 X .62 SS
9	712757	1	WASHER-LOCK #10 SPLIT SS
10	712758	2	WASHER-LOCK 1/4 SPLIT SS
11	712812	4	SCR-PHMS 10-24 X .62 ZP
12	712822	1	SCR-THMS 10-24 X .50 SS
13	3303255	1	CLAMP-HOSE 1.75 DIA NOMINAL

Manufacturer PDF Provided by www.southeasternequipment.net

Chassis Assembly

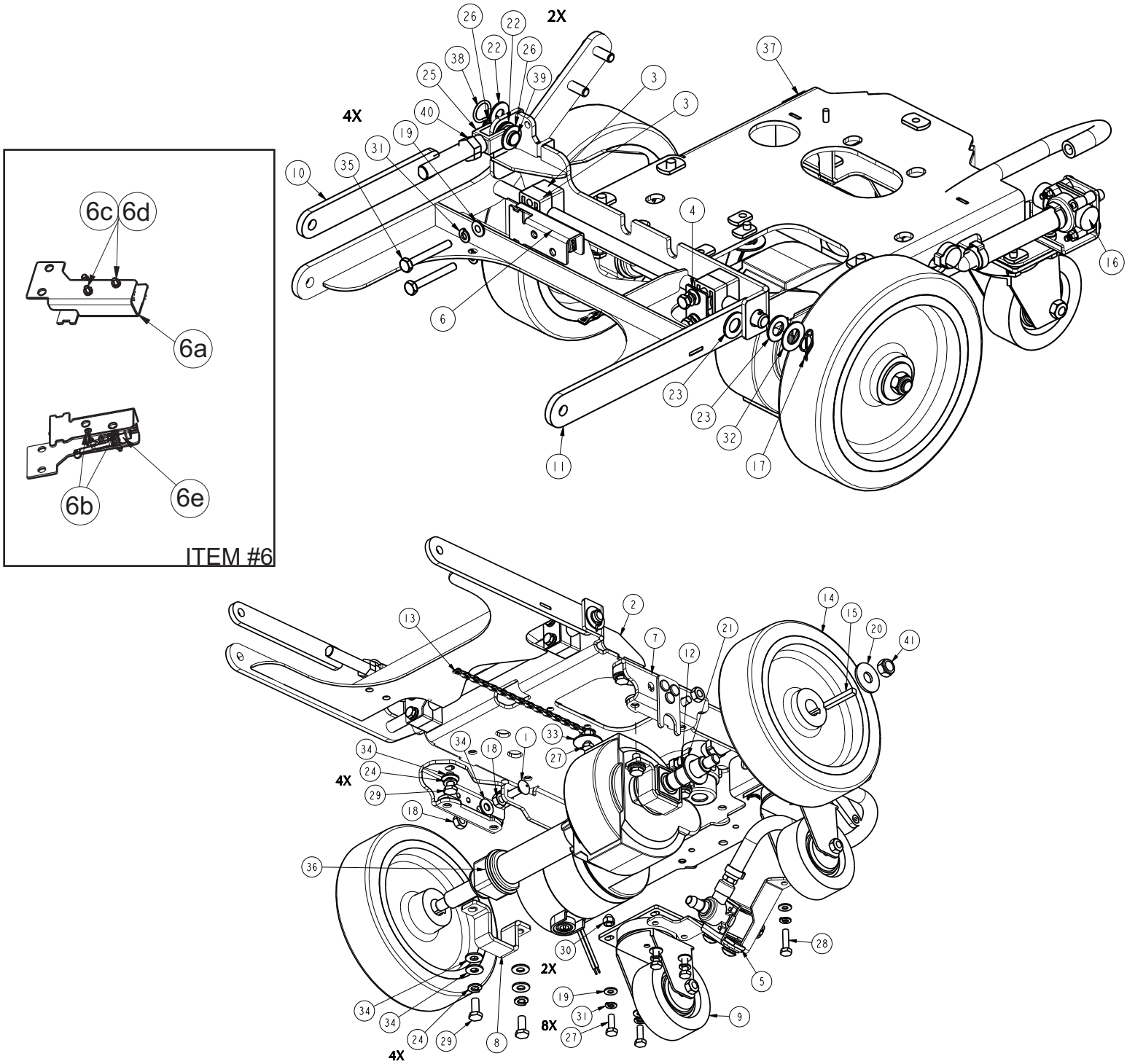

Manufacturer PDF Provided by www.southeasternequipment.net

Chassis Assembly BOM

BILL OF MATERIAL - 172009							
ITEM	PART NO.	QTY	DESCRIPTION	ITEM	PART NO.	QTY	DESCRIPTION
1	70-516-16	2	BLT-CARR 5/16-18 X 1 ZP	19	711504	12	WASHER-FLAT 1/4 SS
2	172020	1	E1720 MAIN FRAME WMT	20	711510	2	WASHER-FLAT 1/2 X 1.37 X .10 ZP
3	172038	4	BEARING BLOCK	21	711512	2	WASHER-FLAT 3/4 X 1.37 X .08 ZP
4	172039	1	BEARING BLOCK PLATE	22	711569	3	WASHER-FLAT .390 X .880 X .062 NYL
5	172104	1	SOLENOID MOUNT ASSY	23	711592	2	WASHER-FLAT 1/2 X .90 X .064 NYLON
6	172110	1	DECK SWITCH ASSY	24	712140	8	WASHER-LOCK 5/16 SPLIT SS
6a	172111	1	BEARING BLOCK/SWITCH PLATE	25	712265	1	CLEVIS-YOKE, 1/2-20 WITH .375 PIN
6b	710493	2	SCR-RHMS 4-40 X .75 ZP	26	712301	2	WASHER-FLAT 3/8 X .87 X .06 ZP
6c	711428	2	NUT-HEX 4-40 ZP	27	712562	8	SCR-HH 1/4-20 X .75, 18-8 SS
6d	712326	2	WASHER-INT LOCK #4 SS	28	712564	1	SCR-HH 1/4-20 X 1.00 SS
6e	747603-2	1	SWITCH ASY, MICRO ROLLER W/PACK/CONDUIT	29	712575	8	SCR-HH 5/16-18 X .75 18-8 SS
7	172113	2	BKT, TRANSAXLE MOUNT BASE	30	712591	2	NUT-ACORN 1/4-20 SS
8	172114	2	BKT, TRANSAXLE MOUNT	31	712758	12	WASHER-LOCK 1/4 SPLIT SS
9	172167	2	CASTER, 3 1/2" PU WHEEL	32	712760	1	WASHER-FLAT .56 X 1.06 X .04 SS
10	172368	1	UPPER LIFT ARM	33	712761	1	WASHER-FENDER 1/4 X 1.25 X .059 SS
11	172370	1	DISC DECK LIFT WMT, E1720	34	712772	14	WASHER-FLAT .344 X .75 X .06 SS
12	172425	2	RING-RET EXT .75/20mm HD	35	713007	4	SCR-HH 1/4-20 X 2.00 ZP GR 5
13	172516	1	DRAG CHAIN, SS, 8" W/ RING	36	747606	1	TRANSAXLE, E1720 24V
14	172518	2	WHEEL, 8X2 PU GROOVED	37	809444	1	CLIP-CORD
15	172519	2	KEY-SQUARE 6MM X 45MM	38	833374	1	PIN-HAIRPIN COTTER 3/8
16	172571	1	ASSY-SOLUTION VALVE E1720	39	833833	1	PIN-CLEVIS 3/8 X 1.25
17	600578	1	RING-RUE .50 ZP	40	3400449	1	NUT-JAM 1/2-20 ZP
18	711383	4	NUT-HEX 5/16-18 ZP REVERSE LOC	41	12040077	2	NUT-NYLOC M12 X 1.75 ZD CLASS 8

Manufacturer PDF Provided by www.southeasternequipment.net

Solenoid Assembly

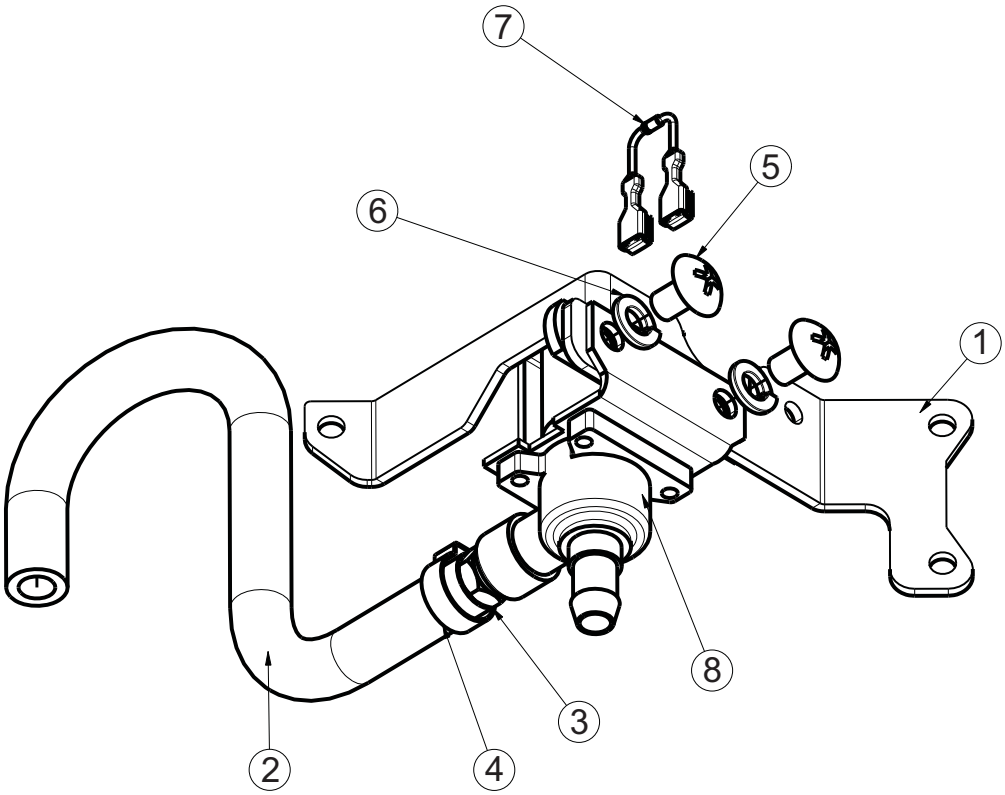

BILL OF MATERIAL - 172104			
ITEM	PART #	QTY	DESCRIPTION
1	172105	1	BKT, SOLENOID MOUNT
2	281637	1	HOSE-WIRE REINF 3/8 X 11"
3	320264	1	FTG-ADAPTER 1/4 MPT X 1/4 HB BRASS
4	450076	1	CLAMP-HOSE 5/8 (.590-.791) SS
5	710195	2	SCR-PHMS 5/16-18 X .50 ZP
6	711545	2	WASHER-LOCK 5/16 SPLIT ZP
7	740482	1	DIODE ASY, 1N4007 W/PIGGY
8	740493	1	VALVE-WATER 24VDC

Manufacturer PDF Provided by www.southeasternequipment.net

Old Style - Solution Valve Assembly

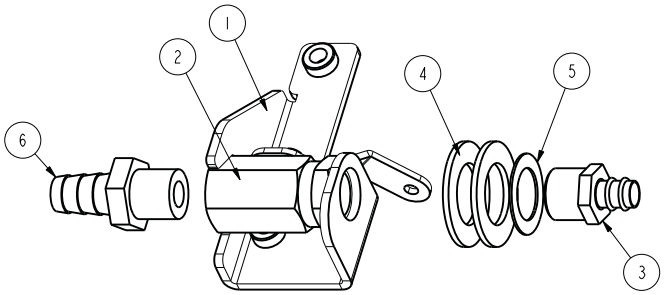

******REPLACING OLD STYLE BRASS SOLUTION VALVE ASSEMBLY 172514 WITH 172571 PLASTIC SOLUTION VALVE ASSEMBLY***

WILL REQUIRE THE PURCHASE OF KIT K-172571

NO LONGER AVAILABLE

OLD STYLE - BILL OF MATERIAL - 172514			
ITEM	**PART NO.**	**QTY**	**DESCRIPTION**
1	172513	1	BRKT, SOL VALVE MOUNT
2	172515	1	BALL VALVE, BRASS, 3/8FNPT, CUST HANDLE
3	320265	1	FTG-ADAPTER 3/8 MPT X 3/8 HB BRASS
4	711512	2	WASHER-FLAT 3/4 X 1.37 X .08 ZP
5	711513	1	WASHER-FLAT .689 X 1.06 X .029 SS
6	827008	1	FTG-ADAPTER 3/8 MPT 1/2 HB BRASS

New Style - Solution Valve Assembly

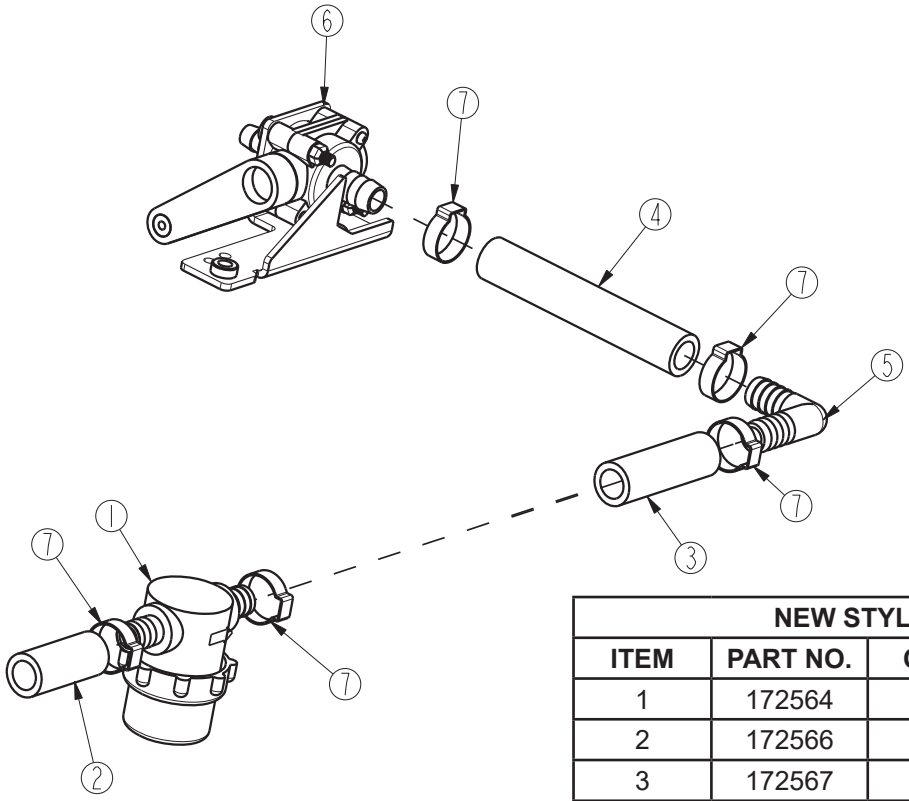

NEW STYLE - BILL OF MATERIAL - 172571			
ITEM	**PART NO.**	**QTY**	**DESCRIPTION**
1	172564	1	FILTER-SOLUTION E1720
2	172566	1	HOSE- 1/2ID X 1.75" NYLOBRAID
3	172567	1	HOSE-1/2"ID X 2.375" NYLOBRAID
4	172568	1	HOSE-WIRE REINF 1/2"ID X 4.25"
5	172569	1	FTG-ELBOW 90 1/2 HB X 1/2 HB NYLON
6	172579	1	SOLUTION CNTRL VALVE, WITH BRKT
7	383347	5	CLAMP-CRIMP 1/2 HOSE

Manufacturer PDF Provided by www.southeasternequipment.net

Solution Control Handle Assembly

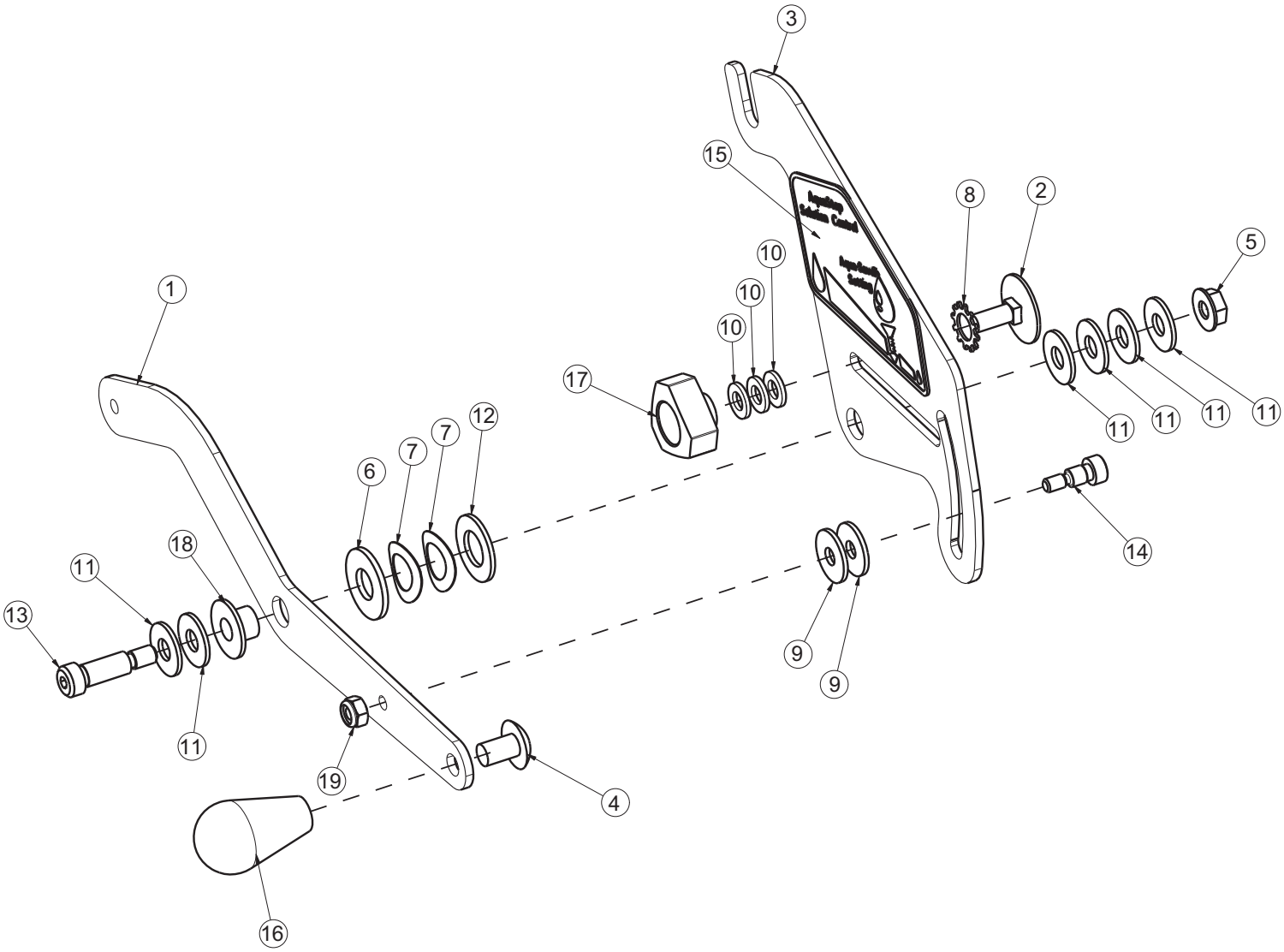

Manufacturer PDF Provided by www.southeasternequipment.net

Solution Control Handle Assembly BOM

BILL OF MATERIAL - 172577			
ITEM	**PART NO.**	**QTY**	**DESCRIPTION**
1	172061	1	LEVER, SOLUTION CONTROL BRK'T
2	172424	1	BLT-ELEVATOR 1/4-20 x .75 ZINC
3	172575	1	BRKT, AQUASTOP SOL CNTRL
4	710195	1	SCR-PHMS 5/16-18 X .50 ZP
5	711425	1	NUT-FLANGED WIZZ 1/4-20 ZP
6	711508	1	WASHER-FLAT 3/8 X 1.00 X .08 ZP
7	711524	2	WASHER-FLAT 3/8 X 1.00 X .08 ZP
8	711539	1	WASHER-EXT LOCK 3/8 ZP
9	711550	2	WASHER-FLAT 1/4 X .75 NYLON
10	711566	3	WASHER-FLAT #12 X .50 X .065 ZP
11	711575	6	WASHER-FLAT 1/4 X .75 X .06 ZP
12	711592	1	WASHER-FLAT 1/2 X .90 X .064 NYLON
13	712070	1	BLT-SHOULDER 5/16 X .75 LG X 1/4-20 BLK
14	713598	1	BLT-SHOULDER 1/4 X .313 LG X 10-24 SS
15	715690	1	DECAL, AQUASTOP SOLUTION CONTROL
16	760592	1	KNOB-OVAL TAPERED
17	833214	1	KNOB-3 SIDED 1/4-20 INSERT
18	840202	1	BUSHING-FLG .31 X .435 X .325 NYL
19	3400399	1	NUT-NYLOC 10-24 SS

Manufacturer PDF Provided by www.southeasternequipment.net

Solution Tank Assembly

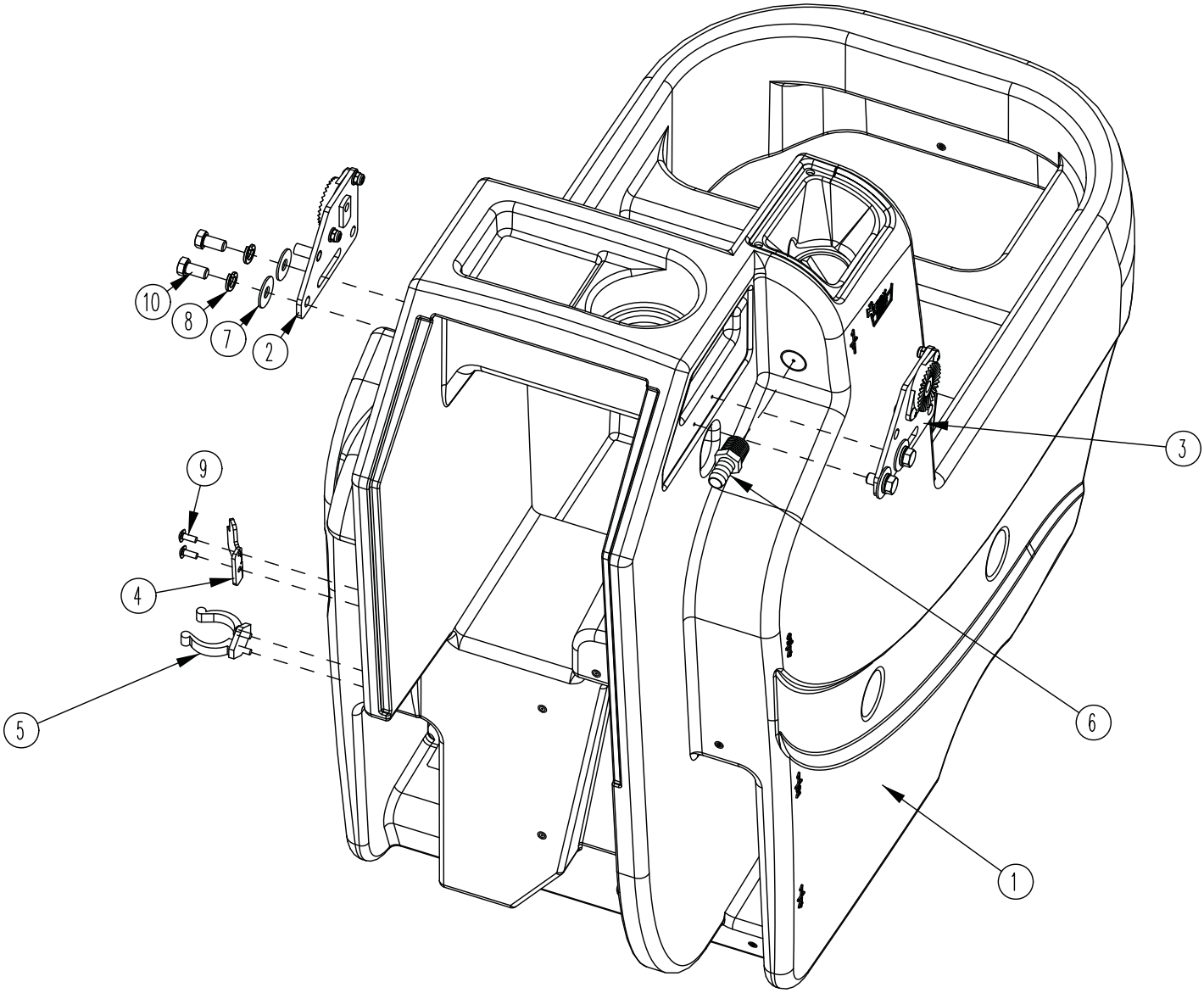

BILL OF MATERIAL - 172013			
ITEM	PART NO.	QTY	DESCRIPTION
1	172003	1	SOLUTION TANK
2	172080	1	HANDLE MOUNT ASSY, LEFT
3	172082	1	HANDLE MOUNT ASSY, RIGHT
4	172341	1	HOOK, DRAIN HOSE WITH TWIST VALVE
5	260579	1	TOOL CLIP, 1.5" HOSE
6	342438	1	FITTING, 1/2 MPT 1/2 HB BRASS
7	711507	4	WSR-FLAT .37 X 1.12 X .06
8	711546	4	WSR-HELICAL 3/8
9	712822	4	SCR-MC TR HD 10-24 X .50 SS
10	713041	4	BLT-HH 3/8-16 X 3/4 #5

Manufacturer PDF Provided by www.southeasternequipment.net

Lift Pedal Stop Assembly

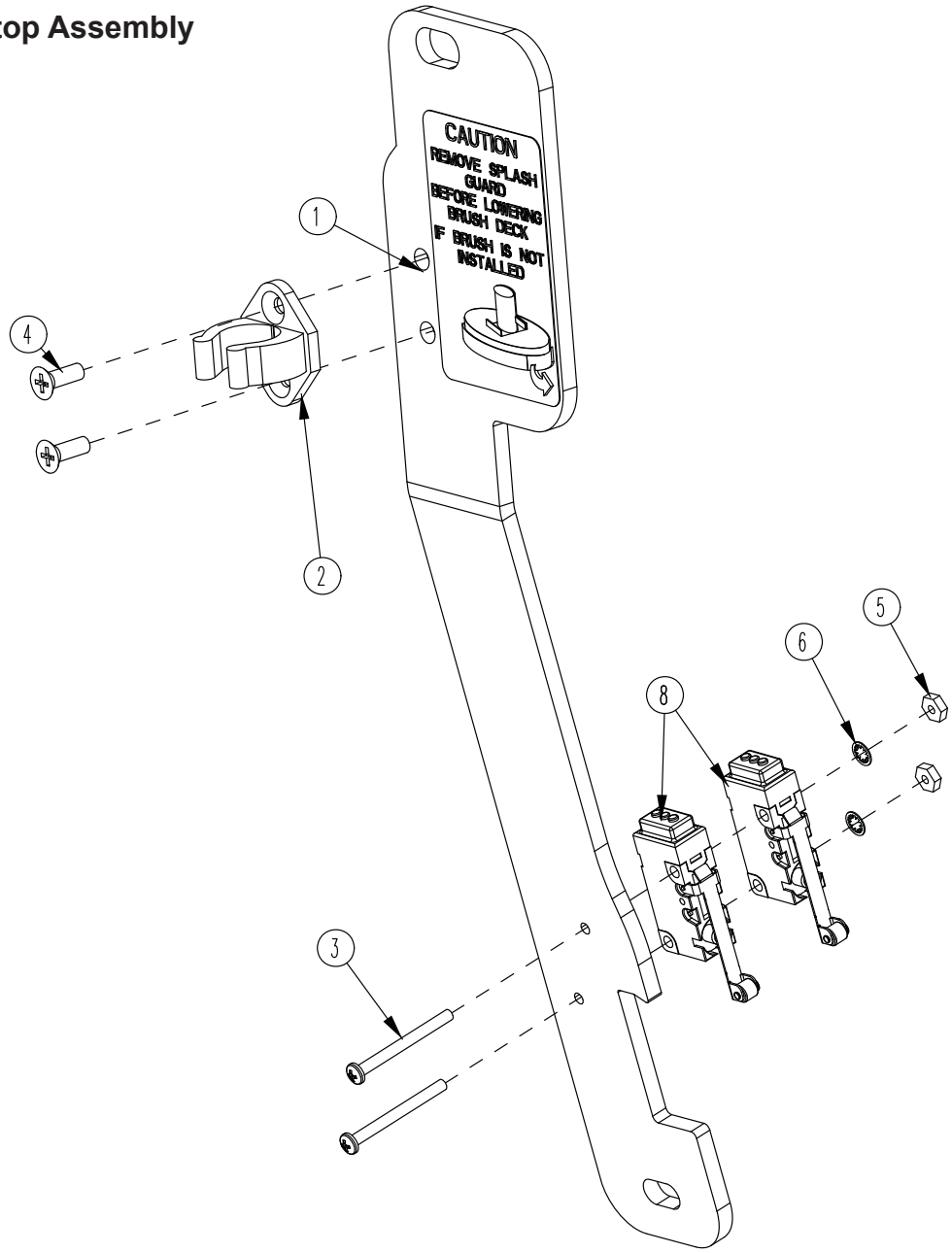

BILL OF MATERIAL - 172166			
ITEM	PART NO.	QTY	DESCRIPTION
1	172036	1	BKT, PEDAL STOP
2	172065	1	CLIP, FOR 1/2" ID HOSE
3	710495	2	SCR-MC 4-40 X 1.25 STL Z
4	710530	2	SCR-MC FL HD 8-32 X .50 BRS
5	711428	2	NUT-HEX 4-40
6	712326	2	WSR-INT LOCK #4
7	715685	1	DECAL, REMOVE SPLASH GUARD
8	747603-2	2	SWITCH ASY, MICRO ROLLER W/PACK/CONDUIT

Manufacturer PDF Provided by www.southeasternequipment.net

Battery Tray Assembly

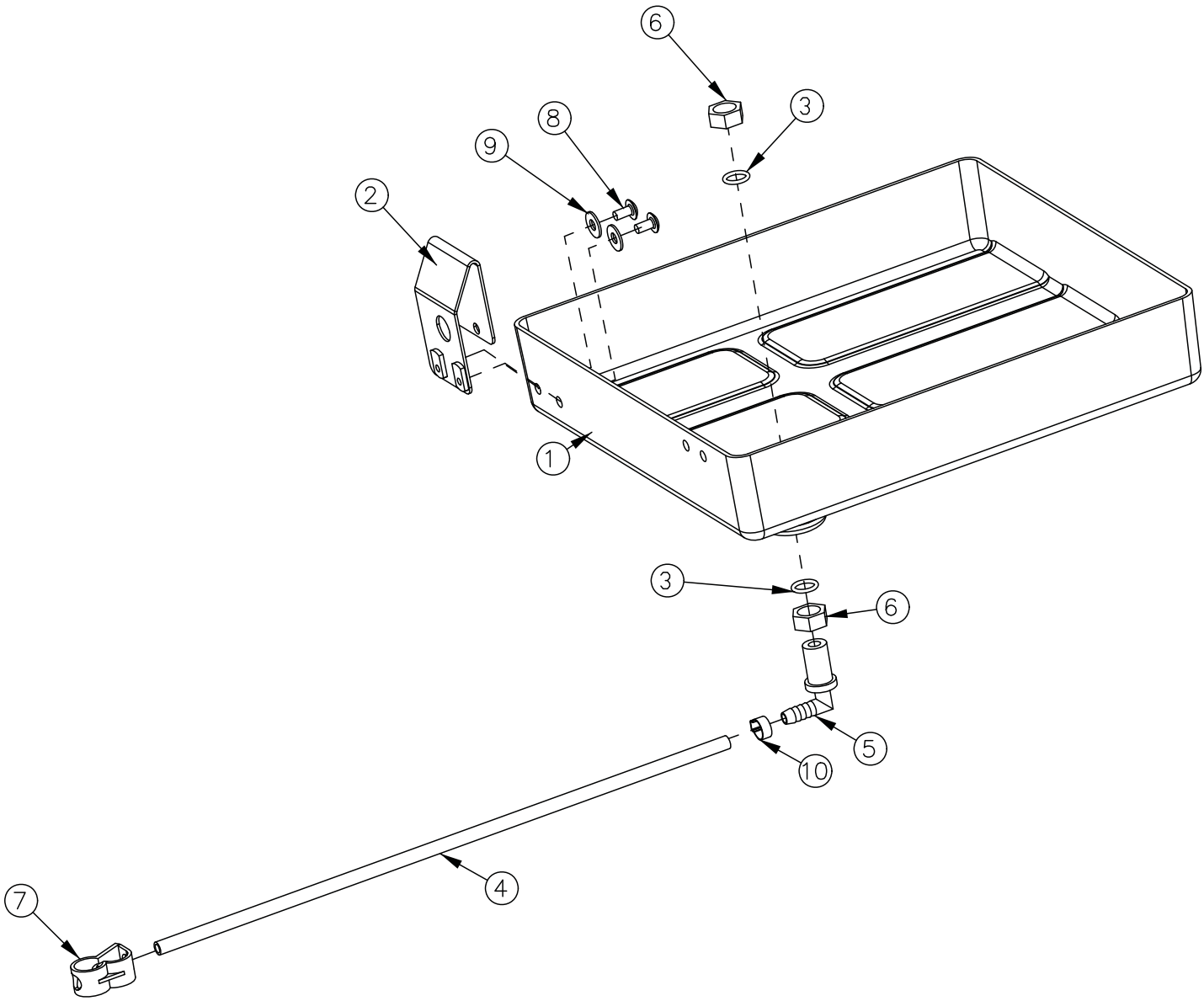

Manufacturer PDF Provided by www.southeasternequipment.net

BILL OF MATERIAL - 172012			
ITEM	**PART NO.**	**QTY**	**DESCRIPTION**
1	172116	1	BATTERY BOX
2	172213	1	BKT, SPACER FOR BATTERIES
3	210414	2	O RING 2-113
4	260224	1	18" HOSE
5	320271	1	NOZZLE BODY-ELBOW
6	320272	2	NOZZLE BODY LOCKNUT
7	320273	1	HOSE SHUT-OFF CLAMP
8	710178	2	SCR-MC 1/4-20 X .50 TRUSS STPL
9	711575	2	WSR-FLT .31x.75x..06ST
10	828490	1	CRIMP CLAMP 140R

Manufacturer PDF Provided by www.southeasternequipment.net

Recovery Tank Assembly

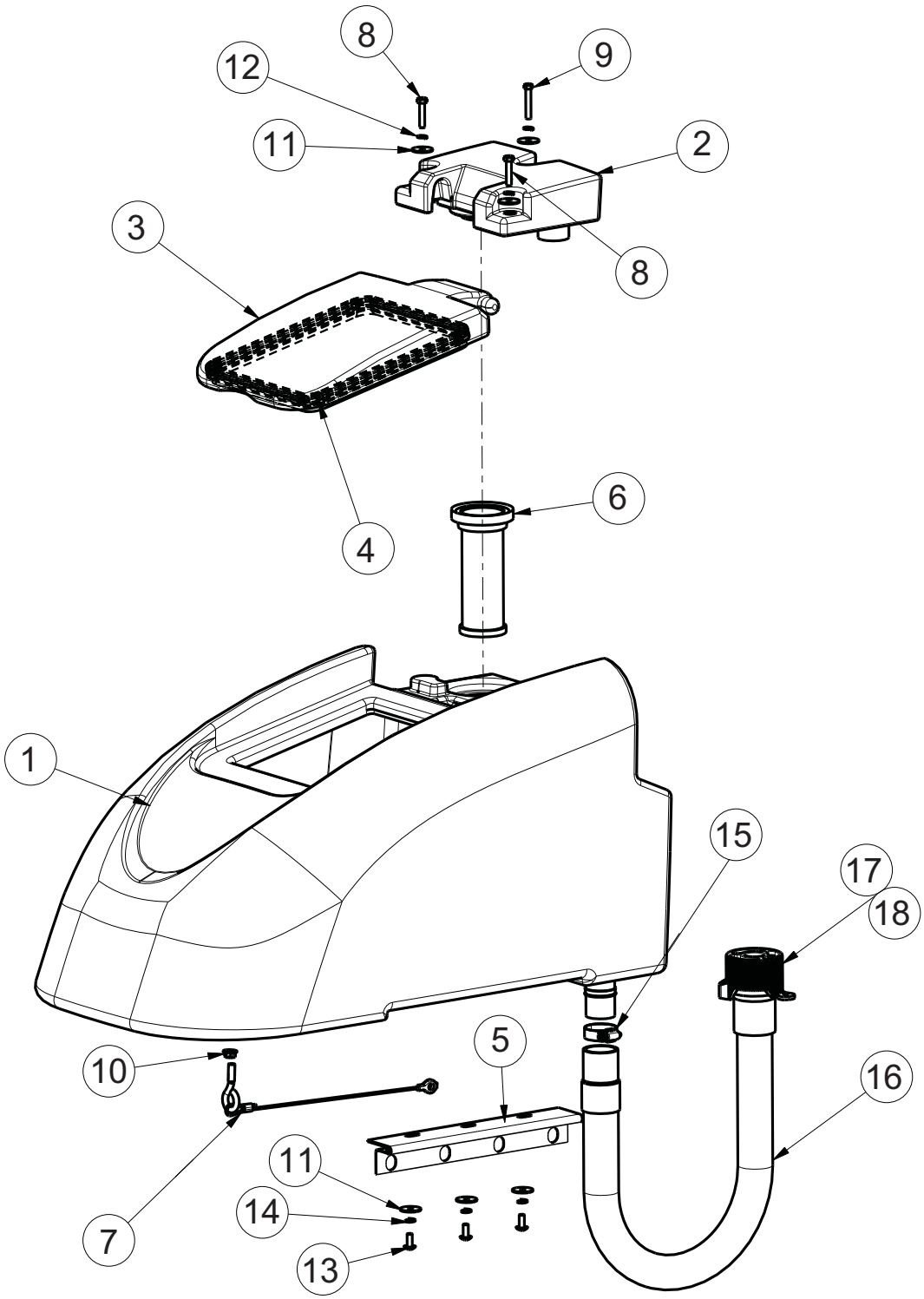

Manufacturer PDF Provided by www.southeasternequipment.net

Recovery Tank Assembly BOM

BILL OF MATERIAL - 172014			
ITEM	**PART NO.**	**QTY**	**DESCRIPTION**
1	172004	1	ES1720 RECOVERY TANK
2	172005	1	ES1720 VACUUM MANIFOLD
3	172007	1	LID, ES1720
4	172017	1	GASKET, ES1720 LID
5	172049	1	HINGE, RECOVERY TANK
6	172132	1	FLOAT, SCREENED
7	172394	1	CABLE, REC TANK 12.0
8	711210	2	SCR-HH 1/4-20 X 1.25 ZP GR 5 FULL THRD
9	711212	1	SCR-HH 1/4-20 X 1.50 ZP GR 5
10	711379	I	NUT-FLANGED WIZZ 5/16-18 ZP
11	711519	6	WASHER-FLAT 1/4 X 1.00 X .06 ZP
12	711544	3	WASHER-LOCK 1/4 SPLIT ZP
13	712565	3	SCR-THMS 1/4-20 X .62 SS
14	712758	3	WASHER-LOCK 1/4 SPLIT SS
15	3303255	1	CLAMP-HOSE 1.75 DIA NOMINAL
16	97090096	1	DRAIN HOSE ASSY, RECOVERY TANK
17	15282072	1	REPLACEMENT O-RING
18	90304528	1	CAP

Manufacturer PDF Provided by www.southeasternequipment.net

Handle Assembly

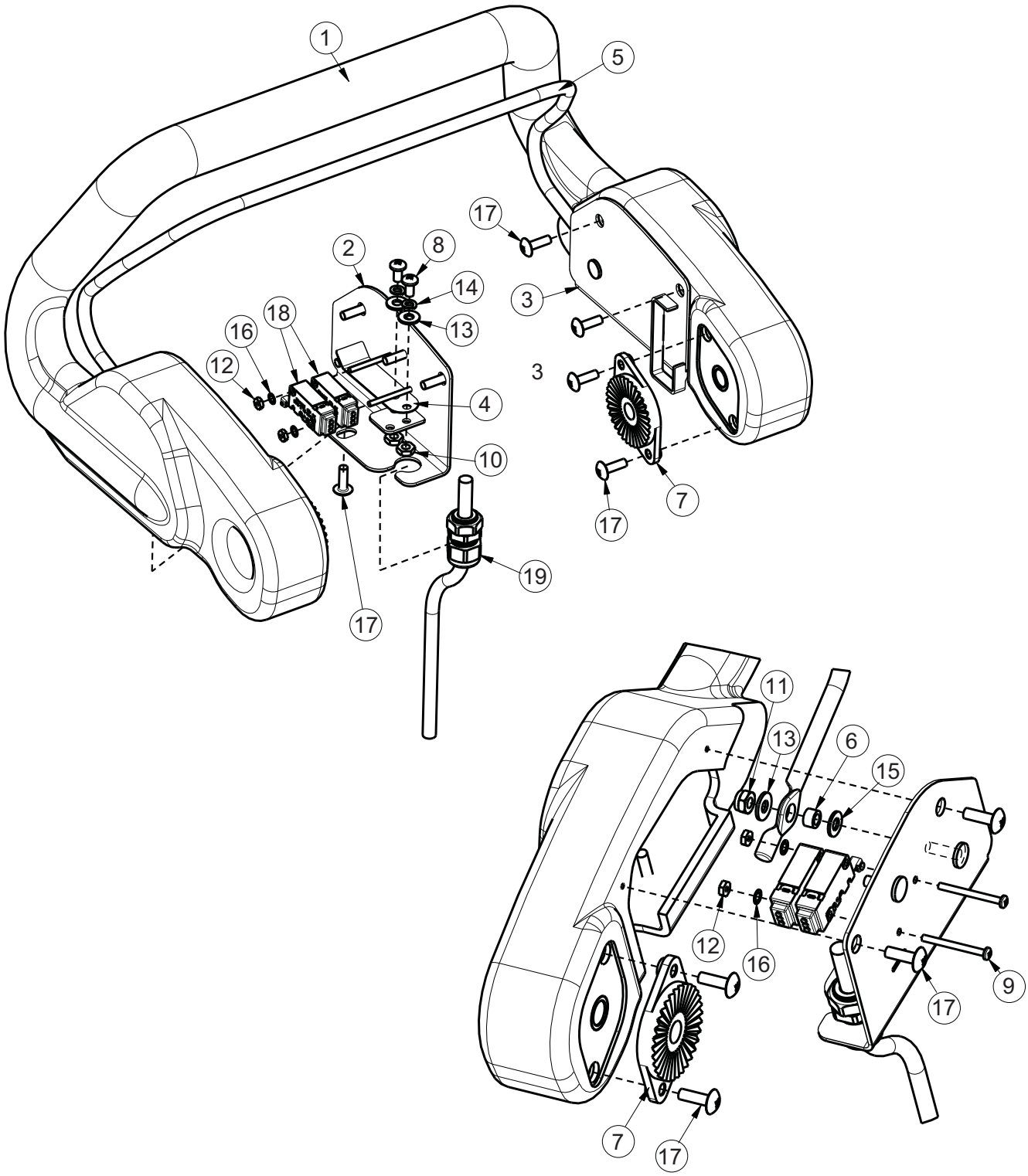

Manufacturer PDF Provided by www.southeasternequipment.net

Handle Assembly BOM

BILL OF MATERIAL - 172015			
ITEM	**PART NO.**	**QTY**	**DESCRIPTION**
1	172006	1	ES1720 HANDLE
2	172053	1	BAIL PLATE WMT RH
3	172054	1	BAIL PLATE WMT LH
4	172057	2	ES1720 LEAF SPRING
5	172059	1	ES1720 BAIL, HANDLE
6	172074	2	SPACER, 5/16OD X 17GA, ALUM
7	270143	2	HANDLE PIVOT JAW
8	710353	4	SCR-MC RD HD 10-32 X.37 STL
9	710495	2	SCR-MC 4-40 X 1.25 STL Z
10	711310	4	NUT, HEX 10-32 ST PL
11	711350	2	NUT-NYLOC 10-32
12	711428	2	NUT-HEX 4-40
13	711503	6	WSR, FLAT#10
14	711543	4	WSR-HELICAL #10
15	712320	2	WSR-NYLON .22 X.45 X.04
16	712326	2	WSR-INT LOCK #4
17	712830	10	SCR-MC 10-24 X.62 STLZ TR HD
18	747603-3	2	SWITCH ASY, MICRO ROLLER W/PACK/CONDUIT
19	747715-1	1	CABLE ASY, 5 COND 18G TD

Manufacturer PDF Provided by www.southeasternequipment.net

Electrical Box Assembly

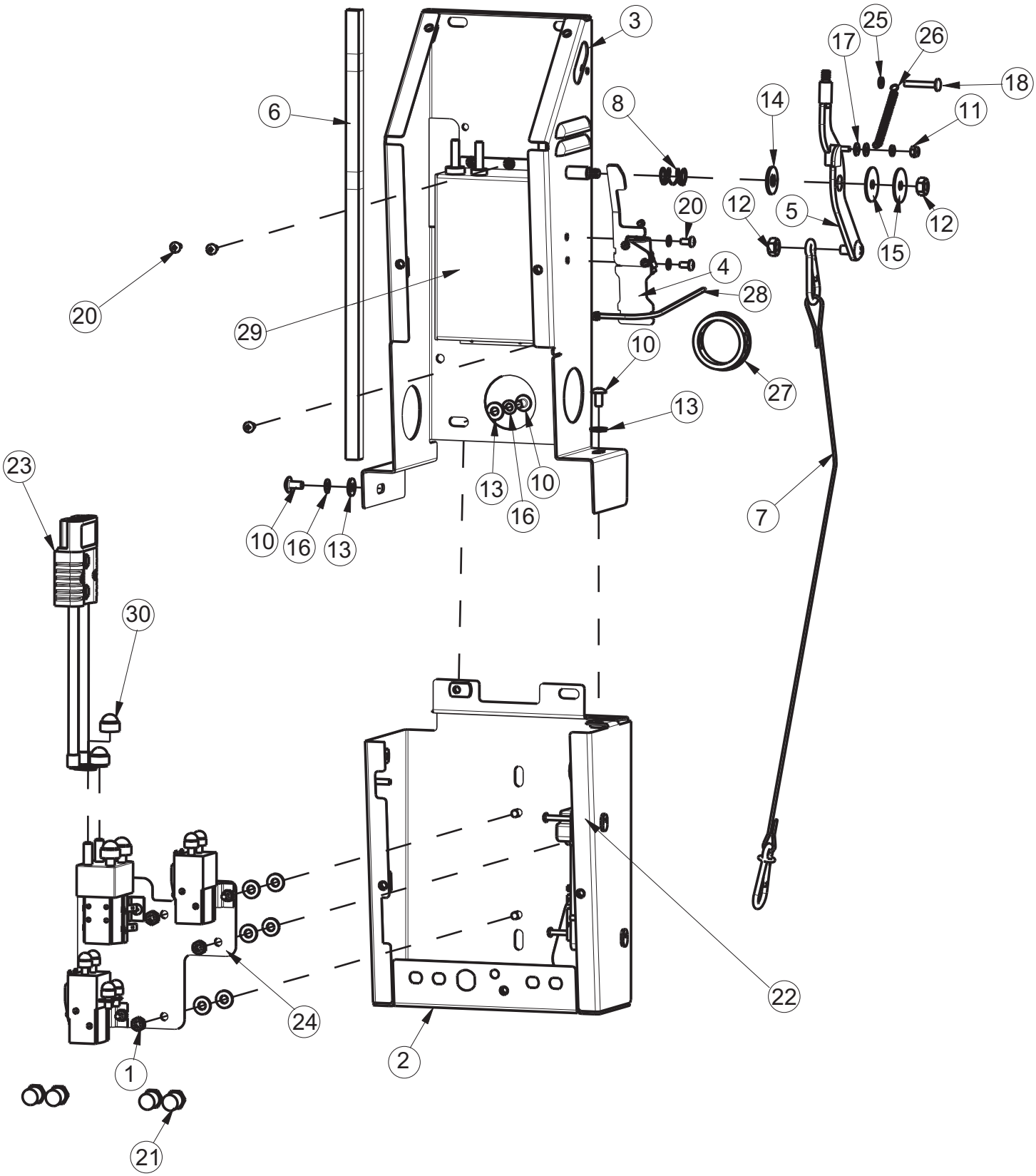

Manufacturer PDF Provided by www.southeasternequipment.net

Electrical Box Assembly BOM

BILL OF MATERIAL - 172075 - 120/230-C			
ITEM	PART NO.	QTY	DESCRIPTION
1	369-416	3	NUT-HEX 1/4-20 ZP DOUBLE SERRATED
2	172077	1	ELEC BOX BOTTOM WMT
3	172088	1	ELEC BOX TOP WMT
4	172141	1	VAC SWITCH ASSY
5	172152	1	WELDMENT-VAC LEVER
6	172188	1	FOAM TAPE, 1/2" SQ X 16.5"
7	172381	1	SQUEEGEE CABLE ASSY
8	670093	1	SPRING-COMP .502 X .6 X 1 ZINC
9	710035	2	SCR-PHMS 8-32 X 1.125 ZP
10	710178	3	SCR-THMS 1/4-20 X .50 ZP
11	711372	1	NUT-NYLOC 8-32 ZP
12	711383	2	NUT-HEX 5/16-18 ZP REVERSE LOC
13	711505	9	WASHER-FLAT 1/4 ZP
14	711508	1	WASHER-FLAT 3/8 X 1.00 X .08 ZP
15	711516	2	WASHER-FLAT 5/16 X 1.25 X .05 ZP
16	711544	2	WASHER-LOCK 1/4 SPLIT ZP
17	712320	2	WASHER-FLAT 20 X .45 X .048 NYLON
18	712533	1	SCR-PHMS 10-24 X 1.25 SS
19	712770	5	WASHER-INT TOOTH LOCK #10 SS
20	712810	5	SCR-RHMS 10-24 X .37 ZP
21	742748	4	CIRCUIT BREAKER-BOOT
22	747608	1	I-DRIVE, 24V 70A PM CONTROL (SEE NOTES)
23	747637	1	WIRE ASY, MACHINE-BATTERY E1720
24	747670	1	ELECTRICAL PANEL ASY, E1720TD
25	760134	2	MOUNT RING
26	762084	1	SPRING-EXT .25OD X 2" F.L. MUSIC
27	762400	1	BUSH -HEYCO 1-5/8 X 2-1/8 X 29/64 2400 B
28	828062	1	CABLE TIE LARGE
29	957937	1	CHARGER, 24V, 155-193AH
30	15592033	2	CAP, SAFETY NUT COVER M8

Manufacturer PDF Provided by www.southeasternequipment.net

Electrical Panel Assembly

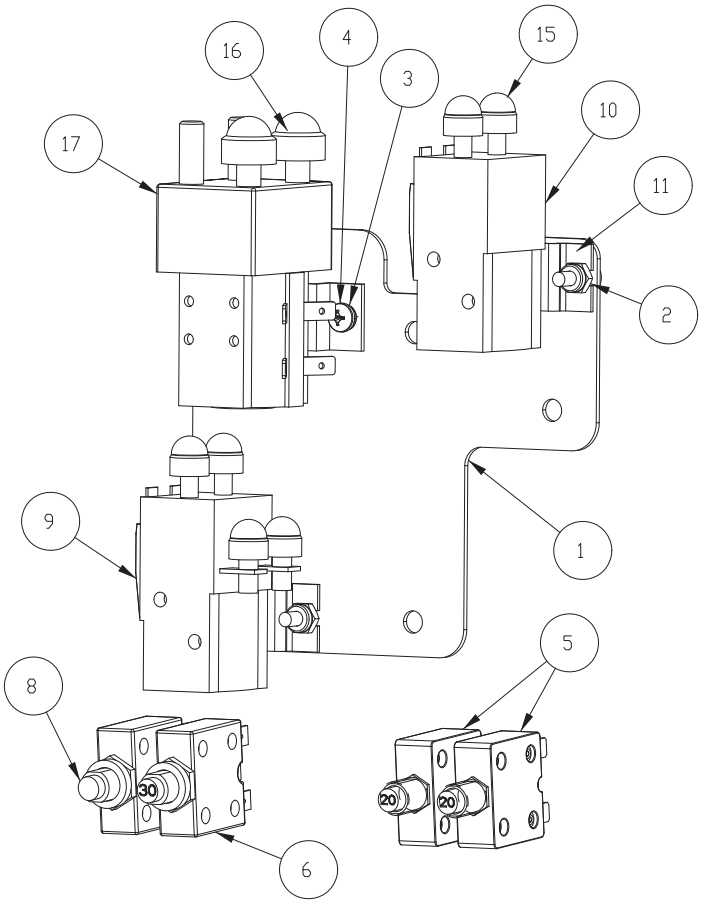

BILL OF MATERIAL - 747670			
ITEM	PART NO.	REQ'D	DESCRIPTION
1	172189	1	PANEL, RELAY MOUNT
2	711350	4	NUT -NYLOC 10-32
3	711543	2	WSR-HELICAL #10
4	712800	2	SCR-MC 10-24 X .25 ST PL
5	740220	2	CIRCUIT BREAKER-20AMP 2-T ERMIN
6	740247	1	CIRCUIT BREAKER-30AMP PUSH BUT
7	740482	2	DIODE ASY, 1N4007 W/PIGGY (NOT SHOWN)
8	747609	1	CIRCUIT BREAKER-4.0AMP PUSHBUT
9	747615	1	RELAY, 2 POLE CURT IS (1720)
10	747616	1	RELAY, 1 POLE CURT IS (1720)
11	747619	2	BRACKET , RELAY 747615 & 747616
12	747640	1	WIRE ASY, 10G RED 13" (NOT SHOWN)
13	747641	1	WIRE ASY, 10G RED 7" (NOT SHOWN)
14	747669	1	WIRE HARNESS, E1720TD MAIN (NOT SHOWN)
15	15592025	6	CAP, SAFET Y NUT COVER M 6
16	15592033	2	CAP, SAFET Y NUT COVER M 8
17	90331026	1	RELAY, 24VDC 2 POLE 100A (HAKO)

Manufacturer PDF Provided by www.southeasternequipment.net

Vacuum Switch Assembly

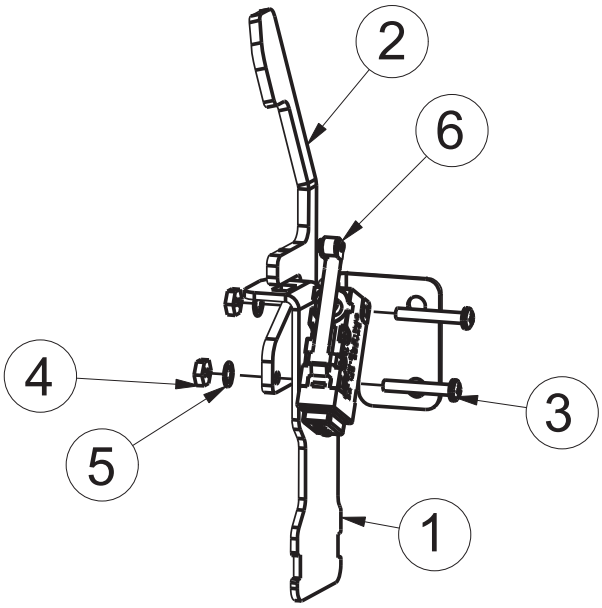

BILL OF MATERIAL - 172141			
ITEM	PART NO.	QTY	DESCRIPTION
1	172140	1	BKT, VAC SWITCH MOUNT
2	172337	1	VAC SWITCH COVER
3	710493	2	SCR-RHMS 4-40 X .75 ZP
4	711428	2	NUT-HEX 4-40 ZP
5	712326	2	WASHER-INT LOCK #4 SS
6	747603-2	1	SWITCH ASY, MICRO ROLLER W/PACK/CONDUIT

Manufacturer PDF Provided by www.southeasternequipment.net

Electrical Box Cover Assembly

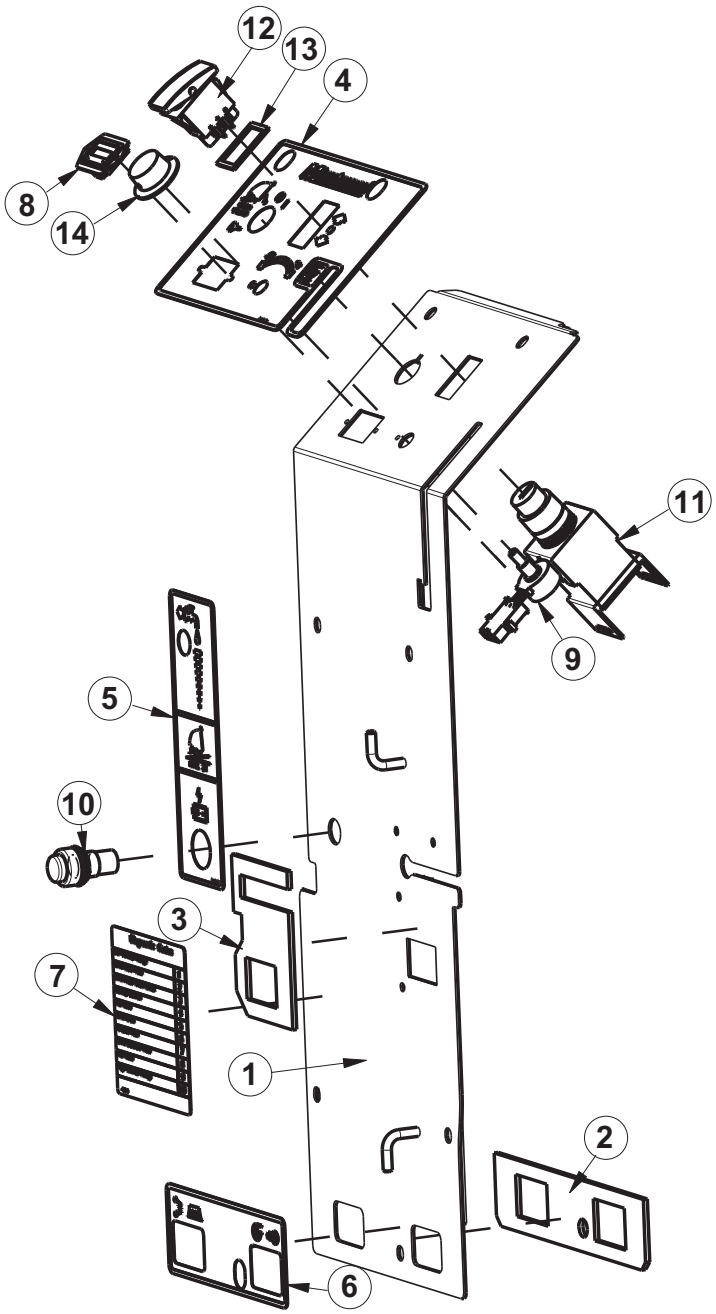

Manufacturer PDF Provided by www.southeasternequipment.net

BILL OF MATERIAL - 172079			
ITEM	**PART NO.**	**QTY**	**DESCRIPTION**
1	172182	1	TD COVER WMT
2	172193	1	GASKET, CB OUTLINE
3	172194	1	GASKET, CHARGER CORD PLATE
4	715671	1	DECAL, DASHBOARD ES1720TD
5	715672	1	DECAL, CHARGE STATUS, SOLUTION CTRL
6	715674	1	DECAL, TD CIRC BKRS, ES1720
7	715699	1	DECAL, DIAGNOSTIC CODES, NARROW
8	747011	1	GAUGE-BATTERY TRUCHARGE PGDT 36VDC
9	747026	1	POTENTIOMETER ASSY, SPEED CONTROL 5K
10	***	1	INDICATOR, BATTERY CHARGE STATUS (***INCLUDED WITH CHARGER***)
11	747617-2	1	KEYSWITCH ASY, KEYSWITCH + HARN E1720TD
12	748201	1	SWITCH, DPDT ON/OFF/ON (SCV 2426)
13	748209	1	GASKET-FOR 2 POLE ROCKER SWITCHES
14	809874	1	KNOB-SPEED CONTROL

Manufacturer PDF Provided by www.southeasternequipment.net

Vac Motor Assembly

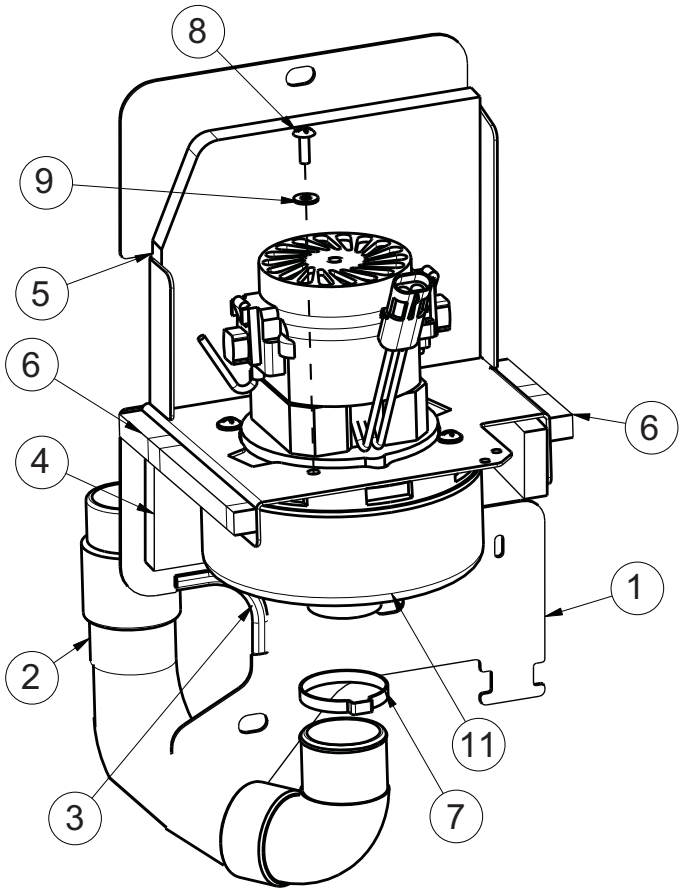

BILL OF MATERIAL - 172050			
ITEM	PART NO.	QTY	DESCRIPTION
1	172045	1	VAC MOUNT WMT
2	172048	1	HOSE, STRETCH 13", 90 CUFF
3	172124	1	EDGE TRIM, .063 X 3.0, BLACK
4	172186	1	FOAM COVER FRONT 1, 1/2 THICK
5	172187	1	FOAM COVER FRONT 2, 1/2" THICK
6	172188	.5	FOAM TAPE, 1/2" SQ X 16.5"
7	450095	1	CLAMP-CRIMP 1.75" OD
8	711160	4	SCR-HI/LO 10 X .625 BLACK ZINC
9	711503	4	WASHER-FLAT #10 X .50 ZP
10	715967	1	DECAL - WARNING, DO NOT PICK UP (NOT SHOWN)
11	747607-1	1	VAC MOTOR ASY, 24V PERIF BYPASS

Manufacturer PDF Provided by www.southeasternequipment.net

E17/20 Brush Hub Assembly

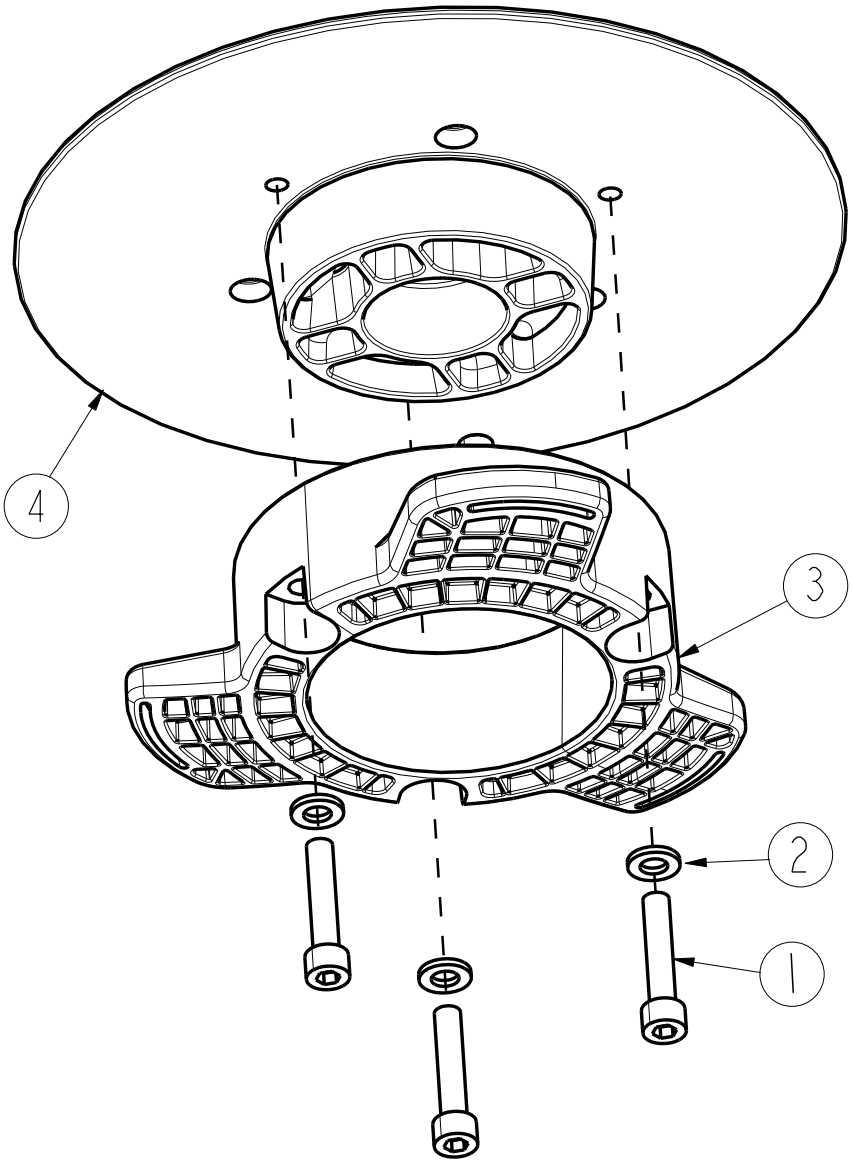

BILL OF MATERIAL - 172510			
ITEM	PART NO.	QTY	DESCRIPTION
1	11127000	3	SCR-SHCS M6X30 SS, ISO4762
2	12310256	3	WSR-FLT 6.4X12X1.6, SS DIN125
3	90541814	1	DRIVE HUB, PLASTIC 3 LOBE
4	172096MCH	1	BASE, DRIVE HUB WITH KEYWAY

Manufacturer PDF Provided by www.southeasternequipment.net

17” Brush Deck Assembly

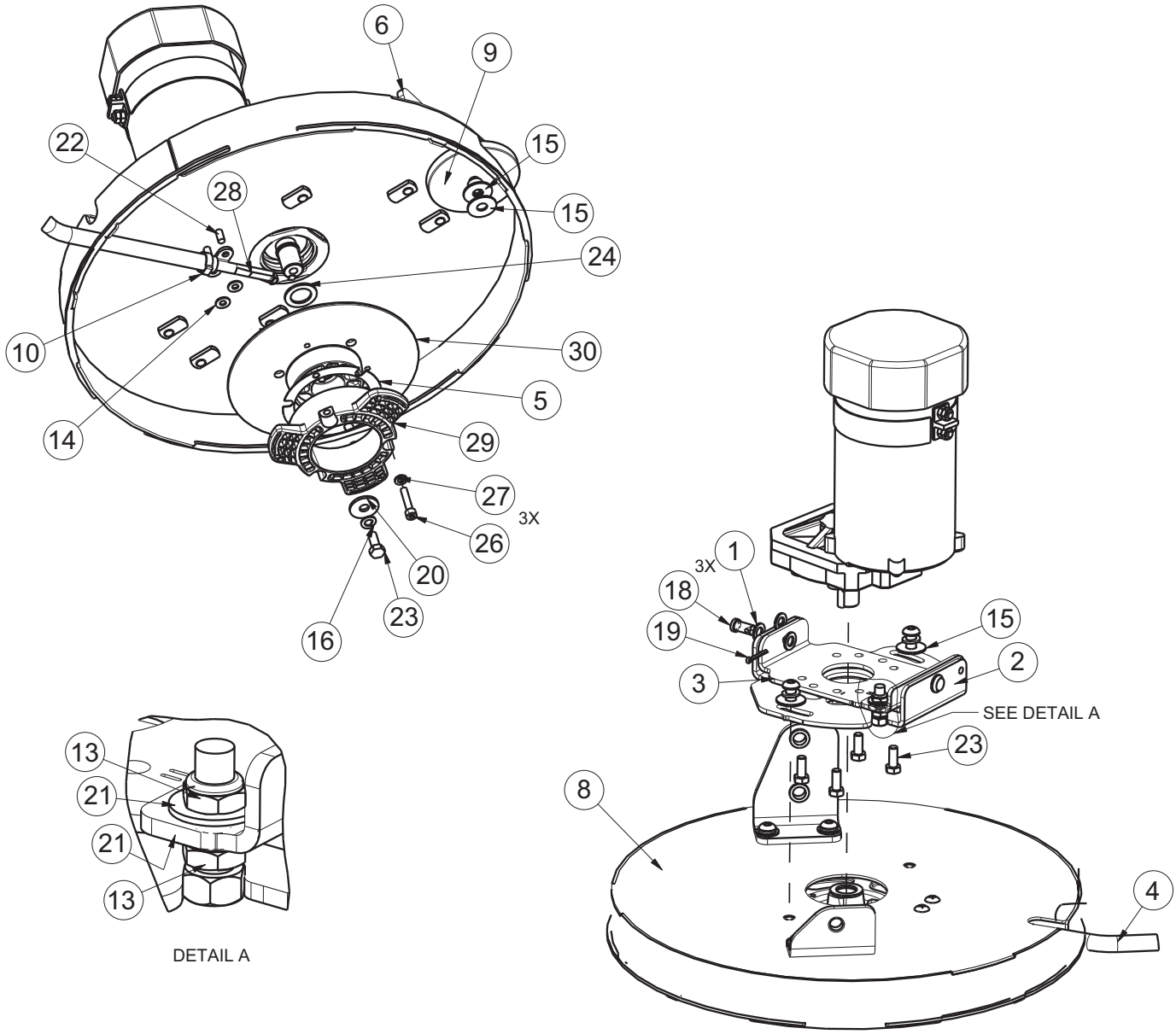

Manufacturer PDF Provided by www.southeasternequipment.net

17” Brush Deck Assembly BOM

BILL OF MATERIAL - 172090TD			
ITEM	PART NO.	QTY	DESCRIPTION
1	3400087	6	WASHER-FLAT .390 X .687 ZP
2	172040	1	WELDMENT-DECK ANGLE ADJUST
3	172044	1	PLATE MOTOR MOUNT
4	172199	1	HOSE-NYLO REINF 3/8 X 21.25"
5	172210	1	SPACER, HUB
6	172296	1	BKT, E1720 DECK MOUNT RT
7	172297	1	BKT, E1720 DECK MOUNT LEFT
8	172365	1	17" BRUSH DECK WMT
9	210153	1	ROLLER WHEEL
10	450076	1	CLAMP-HOSE 5/8 (.590-.791) SS
11	710990	6	SCR-BHSCS 3/8-24 X .75 ZP
12	710991	1	SCR-HH 3/8-24 X .62 ZP GR 5
13	711375	2	NUT-NYLOC 3/8-16 ZP
14	711504	2	WASHER-FLAT 1/4 SS
15	711507	4	WASHER-FLAT 3/8 X 1.12 X .06
16	711545	1	WASHER-LOCK 5/16 SPLIT ZP
17	711546	6	WASHER-LOCK 3/8 SPLIT ZP
18	711679	2	PIN-CLEVIS 3/8 X .750 ZP
19	711809	2	PIN-COTTER 1/8 X 1 SS
20	711855	1	WASHER-FENDER 3/8 X 1.12 X .10 ZP HARD
21	712301	6	WASHER-FLAT 3/8 X .87 X .06 ZP
22	712565	2	SCR-THMS 1/4-20 X .62 SS
23	717024	5	SCR-HH M8-1.25 X 20 ZP GRADE 8.8
24	717025	1	WASHER-FLAT 13/16 X 1.25 X .08 ZP
25	747600	1	MOTOR, 24VDC PM 600W
26	11127000	3	SCR-SHCS M6X30 SS, ISO4762
27	12310256	3	WSR-FLT 6.4X12X1.6, SS DIN125
28	90311663	1	FITTING, WATER NOZZLE W/ MOUNT HOLES
29	90541814	1	DRIVE HUB, PLASTIC, 3-LOBE
30	172096MCH	1	HUB BASE MACHINED

Manufacturer PDF Provided by www.southeasternequipment.net

20” Brush Deck Assembly

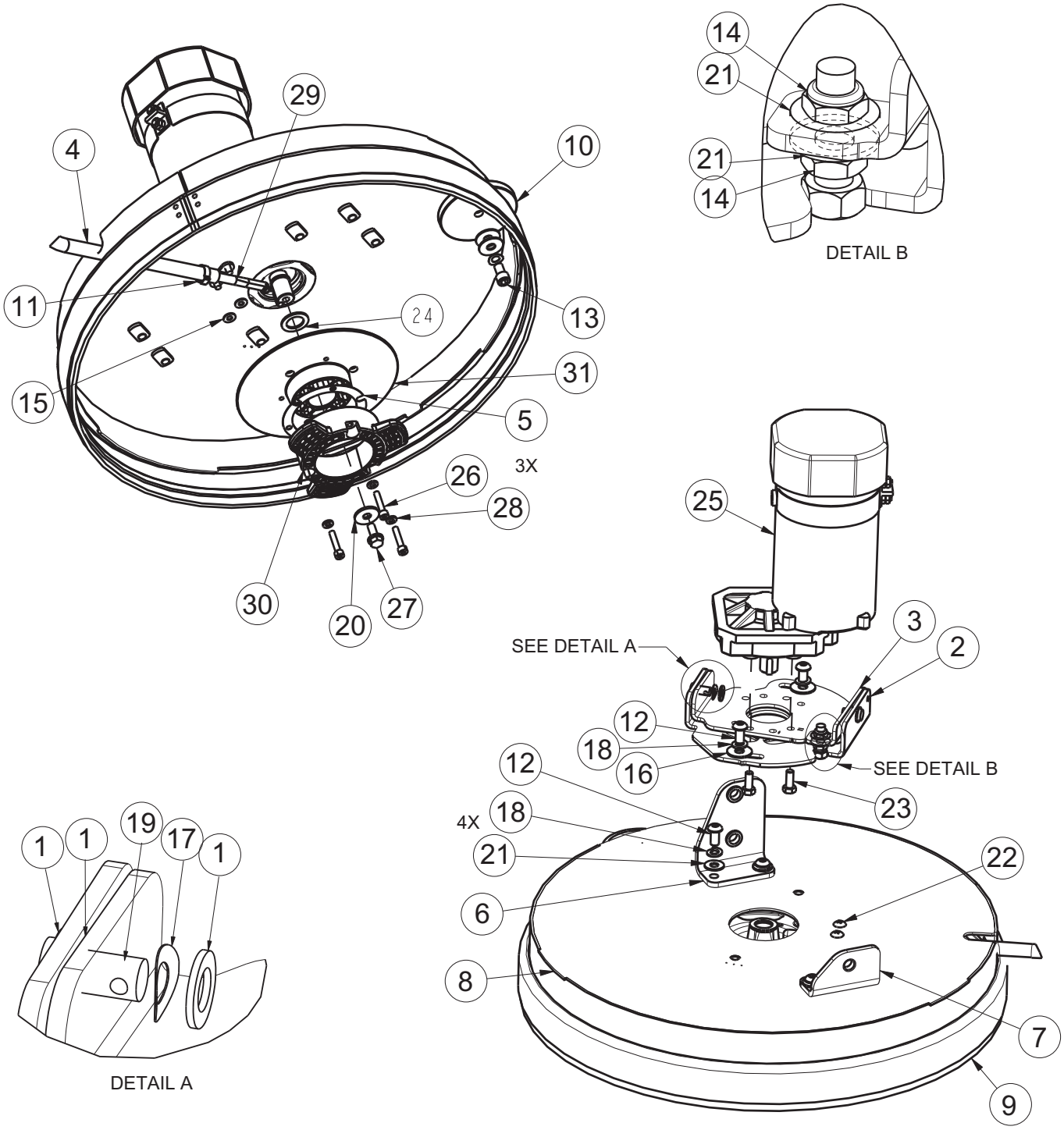

Manufacturer PDF Provided by www.southeasternequipment.net

20” Brush Deck Assembly BOM

BILL OF MATERIAL - 172100TD			
ITEM	PART NO.	QTY	DESCRIPTION
1	3400087	6	SPECIAL WASHER
2	172040	1	DECK ANGLE ADJUST WMT
3	172044	1	PLATE, MOTOR MOUNT
4	172198	1	HOSE-NYLO REINF 3/8 X 22.5"
6	172296	1	BKT, E1720 DECK MOUNT RT
7	172297	1	BKT, E1720 DECK MOUNT LEFT
8	172375	1	DECK COVER WMT, 20"
9	172384	1	E20 FLOATING BRUSH DECK SKIRT
10	210153	1	ROLLER WHEEL
11	450076	1	CLAMP-HOSE 5/8 (.590-.791) SS
12	710990	6	SCR-BHSCS 3/8-24 X .75 ZP
13	710991	1	SCR-HH 3/8-24 X .62 ZP GR 5
14	711375	2	NUT-NYLOC 3/8-16 ZP
15	711504	2	WASHER-FLAT 1/4 SS
16	711507	4	WASHER-FLAT 3/8 X 1.12 X .06
17	711523	3	WASHER-WAVE .37 X .68 X .08
18	711546	6	WASHER-LOCK 3/8 SPLIT ZP
19	711679	2	PIN-CLEVIS 3/8 X .750 ZP
20	711855	1	WASHER-FENDER 3/8 X 1.12 X .10 ZP HARD
21	712301	6	WASHER-FLAT 3/8 X .87 X .06 ZP
22	712565	2	SCR-THMS 1/4-20 X .62 SS
23	717024	4	SCR-HH M8-1.25 X 20 ZP GRADE 8.8
24	717025	1	WASHER-FLAT 13/16 X 1.25 X .08 ZP
25	747600	1	MOTOR, 24VDC PM 600W
26	11127000	3	SCR-SHCS M6X30 SS, ISO4762
27	11717203	1	BLT-HH FLG M8X1.25X20 PRECOTE, ZD 10.9
28	12310256	3	WSR-FLT 6.4X12X1.6, SS DIN125
29	90311663	1	FITTING, WATER NOZZLE W/ MOUNT HOLES
30	90541814	1	DRIVE HUB, PLASTIC, 3-LOBE
31	172096MCH	1	HUB BASE MACHINED

Manufacturer PDF Provided by www.southeasternequipment.net

E17 Rear Squeegee Assembly

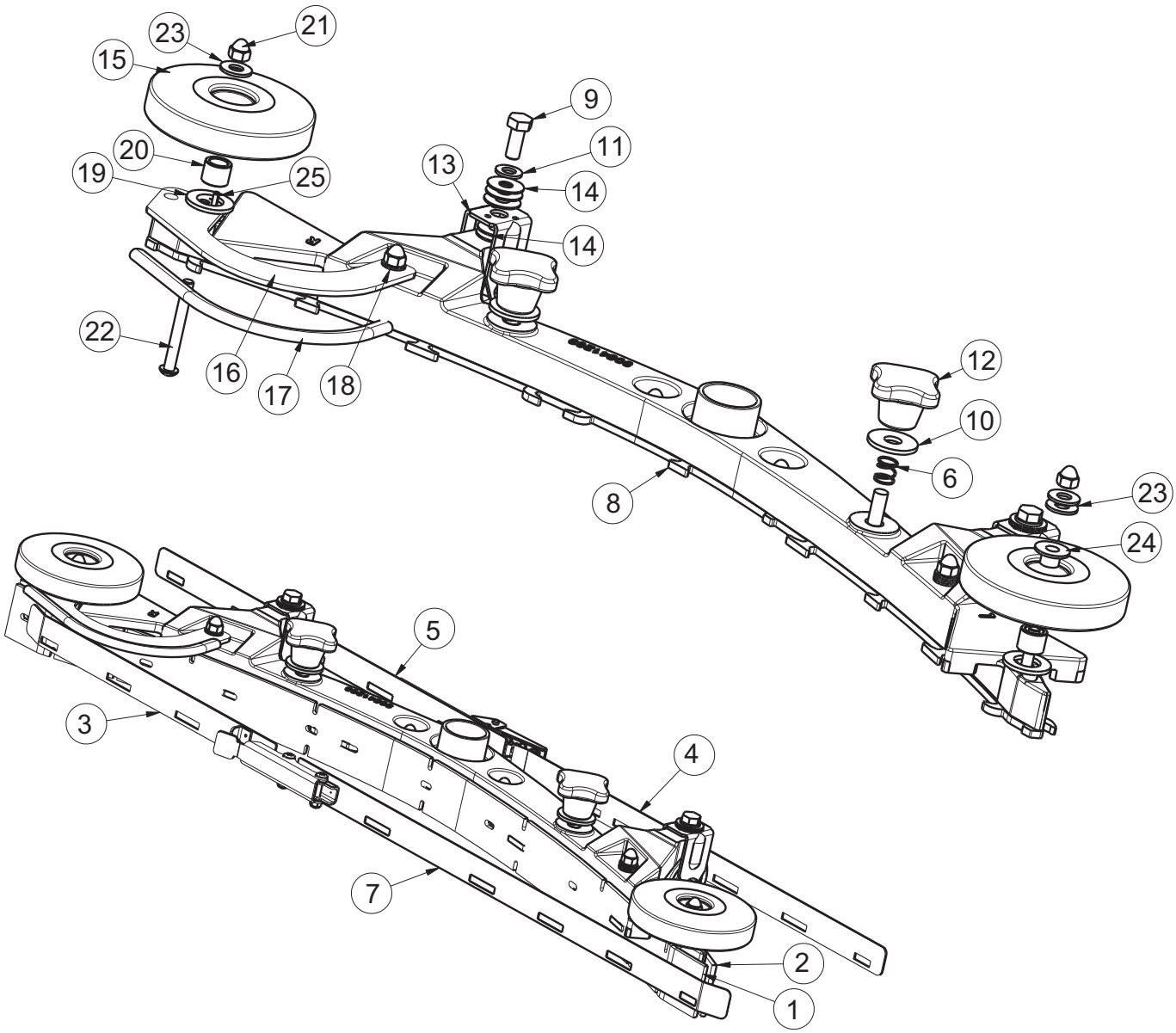

Manufacturer PDF Provided by www.southeasternequipment.net

E17 Rear Squeegee Assembly BOM

BILL OF MATERIAL - 172530			
ITEM	PART NO.	QTY	DESCRIPTION
1	172218	1	SQUEEGEE BLADE, FRONT 30" (760), 4MM PU
2	172219	1	SQUEEGEE BLADE, REAR 30" (760), 4MM PU
3	172224	1	STRAP WMT, FRT RT - 30" (760)
4	172226	1	STRAP WMT, REAR LEFT - 30" (760)
5	172227	1	STRAP WMT, REAR RT - 30" (760)
6	172429	2	SPRING, COMP .4 ID X .5FL SS
7	172443	1	STRAP ASM W/ LATCH, FRONT, 30" SQG
8	172531	1	30" SQUEEGEE BASE ASM
9	717030	2	SCR-HH M8-1.25 X 20 SS
10	717040	2	WASHER-FLAT M10.5 X 30 X 2.5 SS
11	730609	2	WSR-FLT M8.4 X 16 X 1.6 A2 SS 140HV DIN
12	17133026	2	STAR HANDLE, M10, BLACK
13	90513094	2	FIXED CASTER
14	90531112	10	WASHER-FLAT 8.3 x 22 x 1.00mm STAINLESS
15	90548397	2	ROLLER - PLASTIC, 100mm DIA. (4")
16	172257	1	BUMPER, 30" SQG
17	172275	1	EDGE TRIM, 5/16 X 8" BLACK
18	711504	5	WASHER-FLAT 1/4 SS
19	711527	2	WASHER-FLAT .63 X 1.12 X .09
20	430322	2	BUSHING-.435 X .625 X .50 ZINC
21	712591	6	NUT-ACORN 1/4-20 SS
22	3 1 3851	2	SCR-BHSCS 1/4-20 X 2.25 SS
23	2 7 3851	3	WASHER-FLAT .344 X .75 X .06 SS
24	840202	1	BUSHING-FLG .31 X .435 X .325 NYL
25	3400727	1	PIN-ROLL 1/8 X .50 ZINC

Manufacturer PDF Provided by www.southeasternequipment.net

E20 Rear Squeegee Assembly

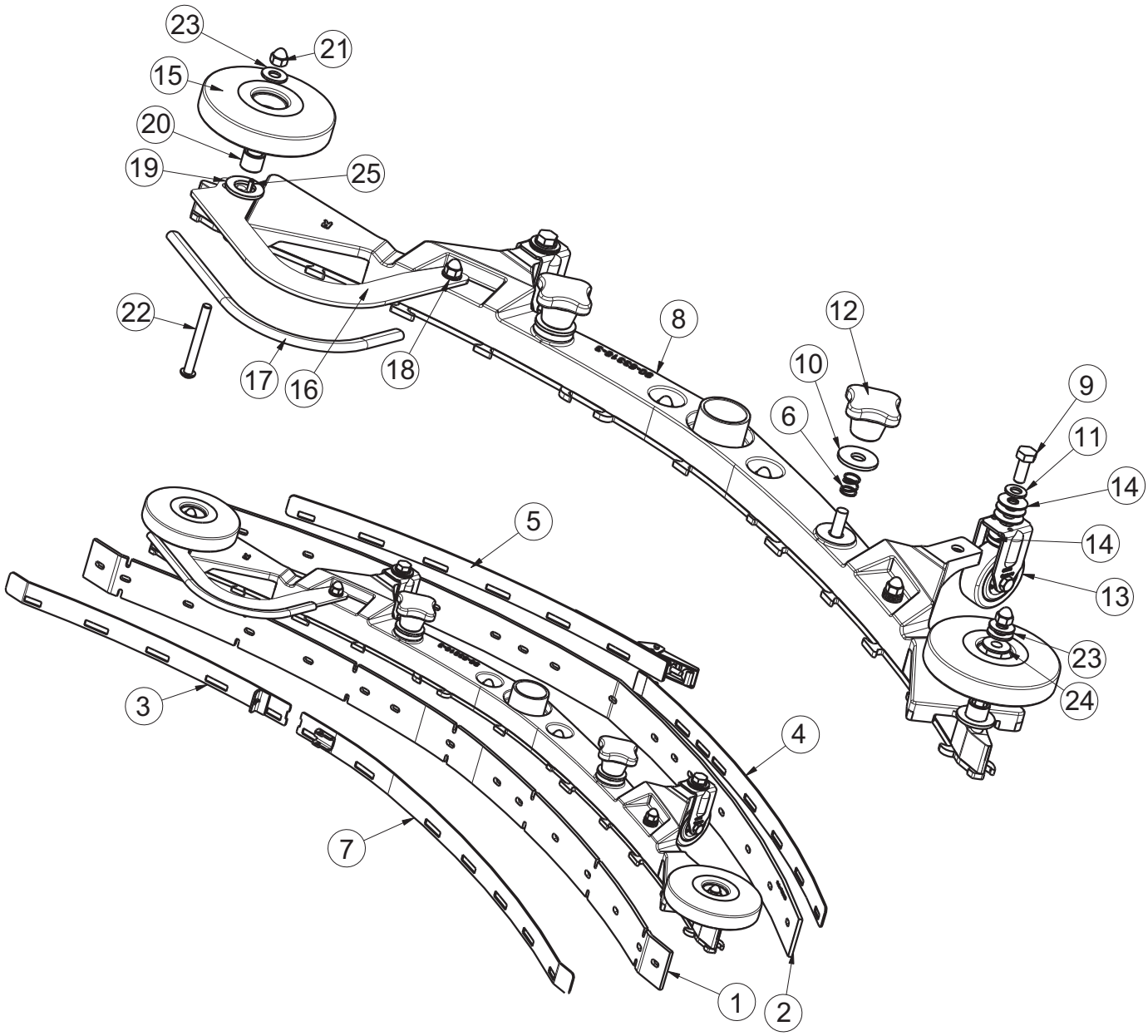

Manufacturer PDF Provided by www.southeasternequipment.net

E20/H20 Rear Squeegee Assembly (Curved) BOM

BILL OF MATERIAL - 172534			
ITEM	PART NO.	QTY	DESCRIPTION
1	172162	1	SQUEEGEE BLADE, FRONT 34" (860) 4MM PU
2	172163	1	SQUEEGEE BLADE, REAR 34" (860), 4MM PU
3	172241	1	STRAP WMT, FRONT RT - 34" (860) SQG
4	172245	1	STRAP WMT, REAR LEFT - 34" (860) SQG
5	172246	1	WELD-STRAP REAR RT - 34" (860) SQG
6	172429	2	SPRING, COMP .4 ID X .5FL SS
7	172440	1	STRAP W/ LATCH, FRONT LEFT, 34" SQG
8	172535	1	34" SQUEEGEE BASE ASM
9	717030	2	SCR-HH M8-1.25 X 20 SS
10	717040	2	WASHER-FLAT M10.5 X 30 X 2.5 SS
11	730609	2	WSR-FLT M8.4 X 16 X 1.6 A2 SS 140HV DIN
12	17133026	2	STAR HANDLE, M10, BLACK
13	90513094	2	FIXED CASTER
14	90531112	10	WASHER-FLAT 8.3 x 22 x 1.00mm STAINLESS
15	90548397	2	ROLLER - PLASTIC, 100mm DIA. (4")
16	172271	1	BUMPER, 34" SQG
17	172274	1	EDGE TRIM, 5/16 X 10" BLACK
18	711504	5	WASHER-FLAT 1/4 SS
19	711527	2	WASHER-FLAT .63 X 1.12 X .09
20	430322	2	BUSHING-.435 X .625 X .50 ZINC
21	712591	6	NUT-ACORN 1/4-20 SS
22	712592	2	SCR-BHSCS 1/4-20 X 2.25 SS
23	712772	3	WASHER-FLAT .344 X .75 X .06 SS
24	840202	1	BUSHING-FLG .31 X .435 X .325 NYL
25	3400727	1	PIN-ROLL 1/8 X .50 ZINC

Manufacturer PDF Provided by www.southeasternequipment.net

E17 Tension Band Sub-Assembly

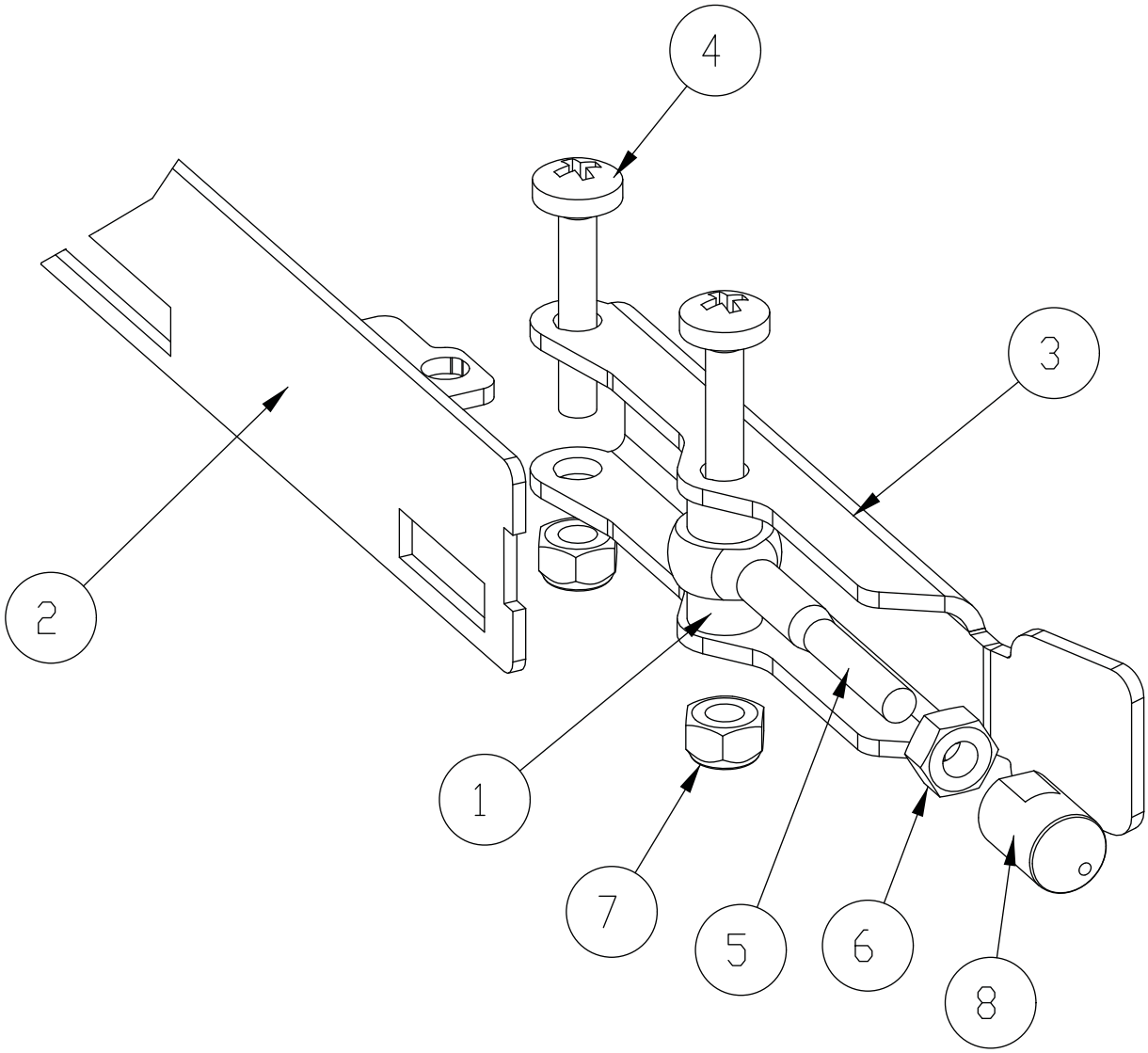

BILL OF MATERIAL - 172443			
ITEM	PART NO.	QTY	DESCRIPTION
1	172074	2	SPACER, 5/16OD X 17GA, ALUM
2	172223	1	STRAP WMT, FRT LEFT-30" (760)
3	172234	1	LEVER, 90535758
4	11175494	2	SCR-MC M5 X 25 SS DIN7985
5	11518313	1	BLT-EYE M5 X 40 SS
6	12022430	1	NUT- HEX, M5, SS DIN934
7	12040283	2	NUT- HEX, M5 NYLON LOCK, SS DIN985
8	90513631	1	PIN, THD 90513631

Manufacturer PDF Provided by www.southeasternequipment.net

E20 Tension Band Sub-Assembly

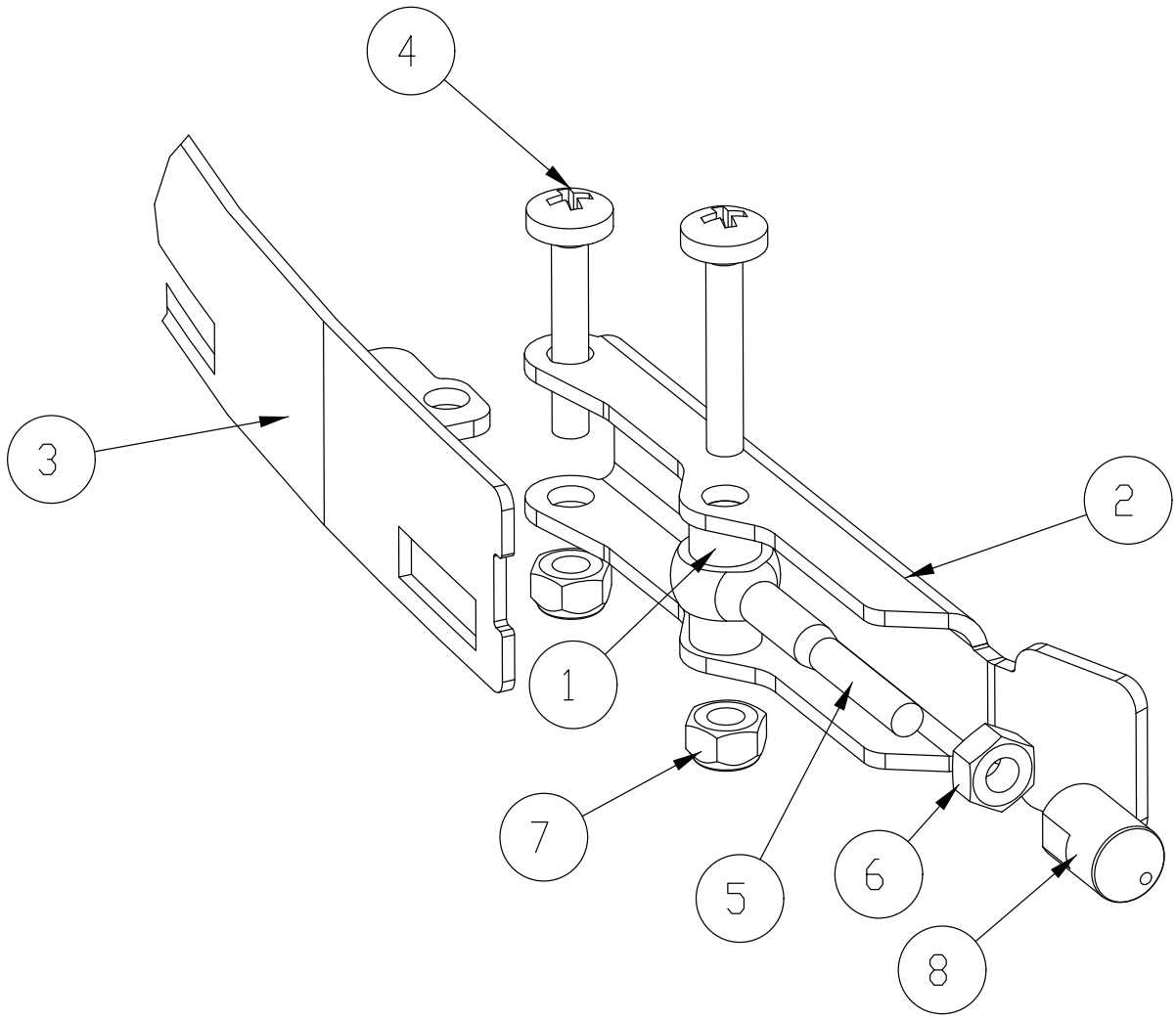

BILL OF MATERIAL - 172440			
ITEM	PART NO.	QTY	DESCRIPTION
1	172074	2	SPACER, 5/16OD X 17GA, ALUM
2	172234	1	LEVER, 90535758
3	172240	1	STRAP WMT, FRONT LEFT
4	11175494	2	SCR-MC M5 X 25 SS DIN7985
5	11518313	1	BLT-EYE M5 X 40 SS
6	12022430	1	NUT- HEX, M5, SS DIN934
7	12040283	2	NUT- HEX, M5 NYLON LOCK, SS DIN985
8	90513631	1	PIN, THD 90513631

Manufacturer PDF Provided by www.southeasternequipment.net

Squeegee Mechanism Assembly

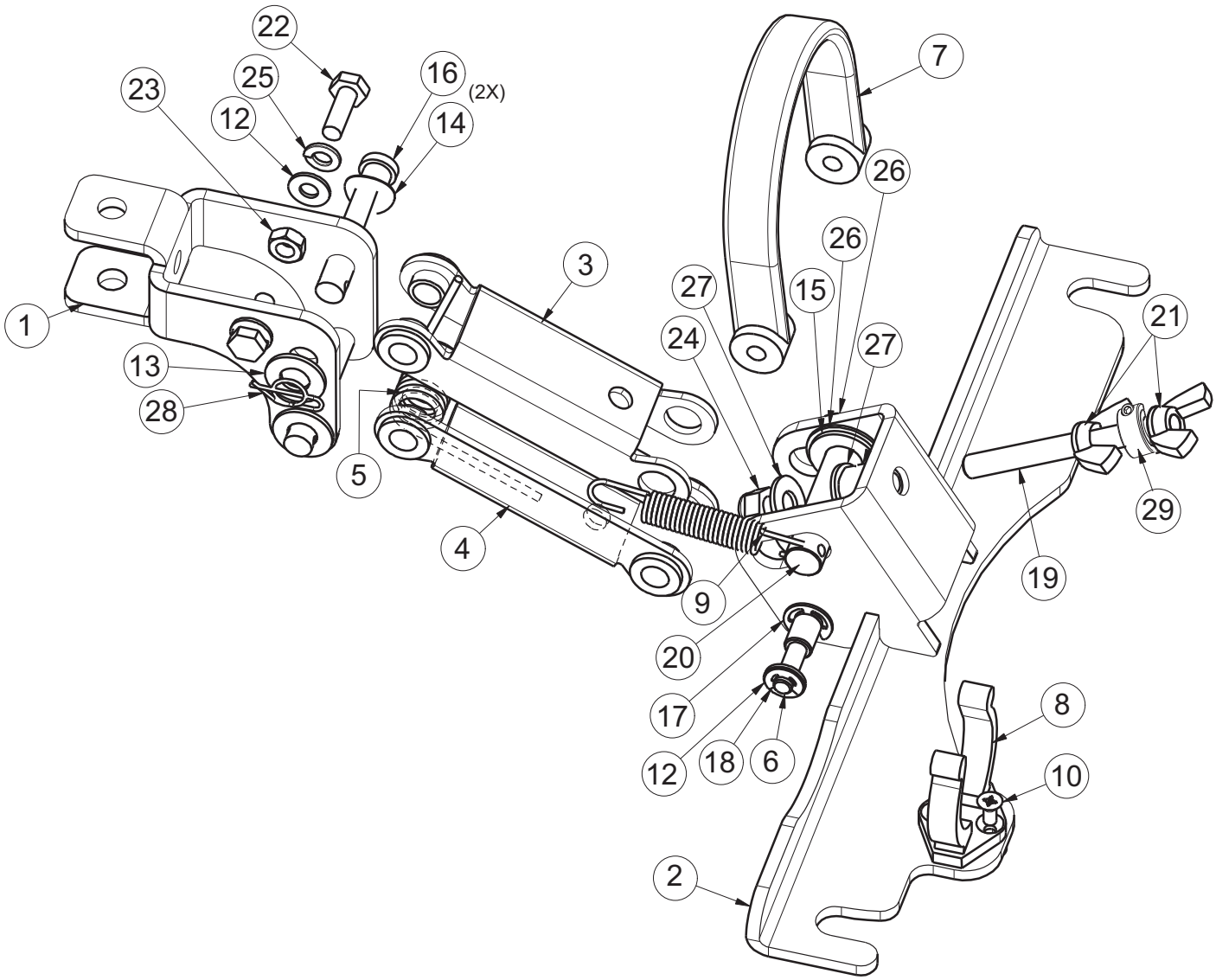

Manufacturer PDF Provided by www.southeasternequipment.net

E17/E20/H20 Squeegee Mechanism Assembly BOM

BILL OF MATERIAL - 172150			
ITEM	PART NO.	QTY	DESCRIPTION
1	172134	1	BKT, SQG HINGE
2	172155	1	SQUEEGEE MOUNT WMT
3	172196	1	UPPER SQG LINK
4	172197	1	LOWER SQG LINK
5	172261	1	SPRING, TORSION 1720 SQG
6	172352	1	PIN, 3/8 X 3.0, SQG STRAP
7	172357	1	STRAP, 9" PU, BLACK
8	260579	1	CLIP-TOOL 1.5 INCH HOSE
9	430051	1	SPRING-RETURN .313 X .438 X 2.93 SS
10	710528	2	SCR-FHMS 8-32 X .37 BRASS
11	711420	1	NUT-JAM 5/16-18 ZP
12	711504	4	WASHER-FLAT 1/4 SS
13	712767	2	WASHER-FLAT .406 X .75 X .035 SS
14	711523	2	WASHER-WAVE .37 X .68 X .08
15	711592	2	WASHER-FLAT 1/2 X .90 X .064 NYLON
16	711678	2	PIN-CLEVIS 3/8 X 2 1/4 ZP
17	711717	2	RET RING-E EXT .37
18	711720	2	RET RING-E EXT .25
19	712147	1	ROD-THD 5/16-18 X 3.25 SS
20	712148	1	PIN-CLEVIS 1/2 X 2.25 WITH HOLE
21	712157	2	NUT-WING 5/16-18 SS
22	712562	2	SCR-HH 1/4-20 X .75, 18-8 SS
23	712665	2	NUT-HEX 1/4-20 SS
24	712683	1	NUT-NYLOC 5/16-18 SS
25	712758	2	WASHER-LOCK 1/4 SPLIT SS
26	712760	3	WASHER-FLAT .56 X 1.06 X .04 SS
27	712772	2	WASHER-FLAT .344 X .75 X .06 SS
28	3400125	1	RING-RUE 3/8
29	713528	1	COLLAR-THREADED CLAMP 5/16-18X5/16-BK OX

Manufacturer PDF Provided by www.southeasternequipment.net

1

PAGE LAYOUT

1	2	3

PAGES GO TOGETHER AS SHOWN TO SEE THE ENTIRE SCHEMATIC AS ONE.

715678: DIAGNOSTIC CODE DECAL

DIAGNOSTIC CODES: BATTERY GAUGE: 747011
1 BAR : CHARGE BATTERIES
2 BAR : DRIVE MOTOR CONNECTION
3 BAR : DRIVE MOTOR SHORT CIRCUIT
4 BAR : BATTERY LOCKOUT
5 BAR : NOT USED
6 BAR : DRIVE INHIBIT
7 BAR : THROTTLE FAULT
8 BAR : DRIVE CONTROLLER FAULT
9 BAR : NOT USED
10 BAR: EXCESSIVE BATTERY VOLTAGE

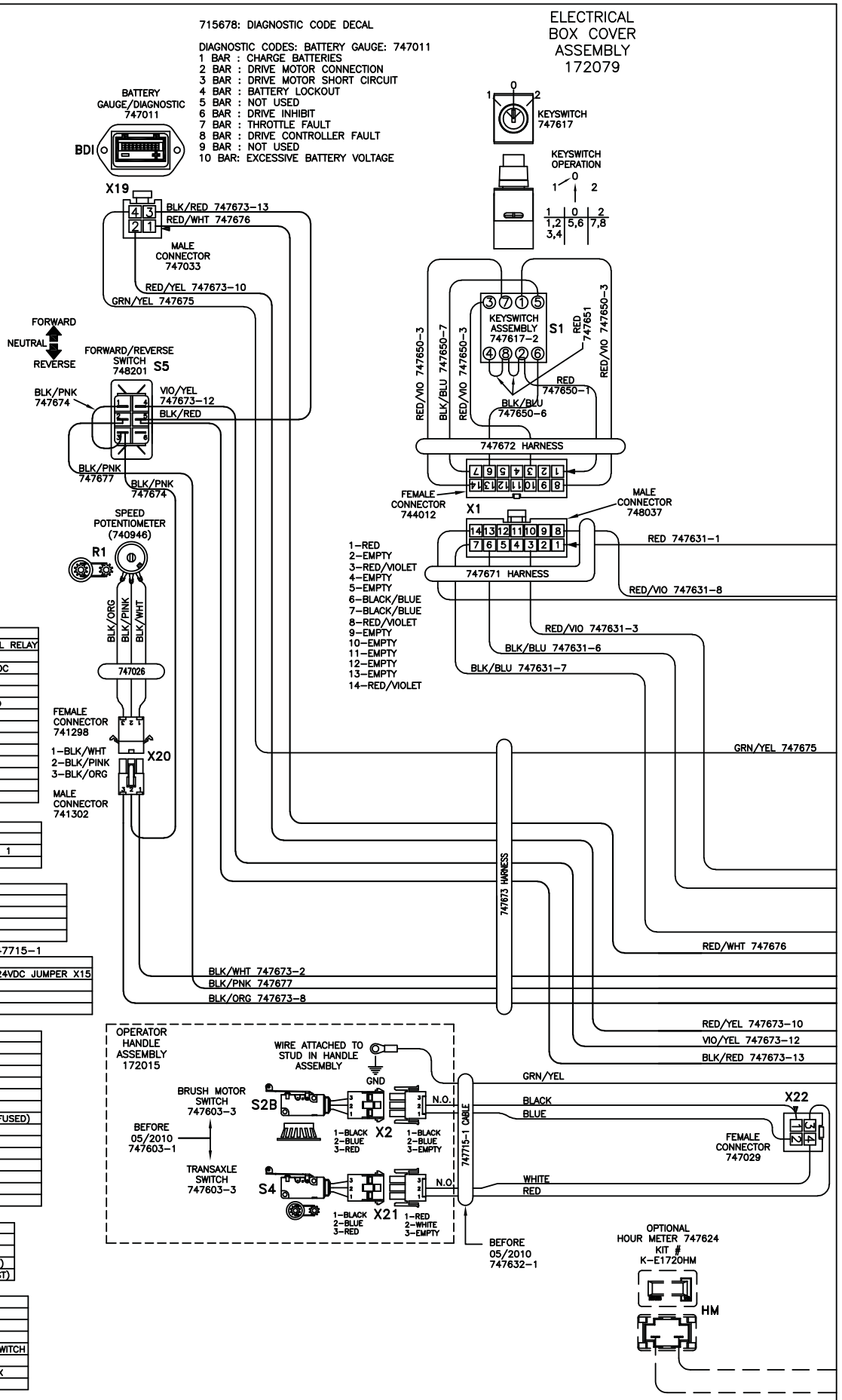

X1: MAIN KEYSWITCH ASSEMBLY: 747617-1

PIN #	COLOR	WHERE TO/FROM
1	RED	X13: BATTERY CHARGER INTERNAL RELAY
2	–	–
3	RED/VIOLET	BRUSH MOTOR RELAY COIL: 24VDC
4	–	–
5	–	–
6	BLACK/BLUE	BRUSH RELAY NORMALLY CLOSED
7	BLACK/BLUE	BRUSH UNLOAD SWITCH P:B
8	RED/VIOLET	X12: MAIN RELAY COIL: 24VDC
9	–	–
10	–	–
11	–	–
12	–	–
13	–	–
14	RED/VIOLET	X12: MAIN RELAY COIL: 24VDC

X20: SPEED POTENTIOMETER: 747026

	COLOR	WHERE TO/FROM
1	BLACK/WHITE	X23: I-DRIVE P:2
2	BLACK/PINK	FORWARD/REVERSE SWITCH 3 TO 1
3	BLACK/ORANGE	X23: I-DRIVE P:8

X22: OPERATOR HANDLE CABLE: 747715-1

	COLOR	WHERE FROM/TO
1	BLUE	X22.1 TO S2B:X2.B
2	BLACK	X22.2
3	RED	X22.3 TO S4:X21.A
4	WHITE	X22.4 TO S4:X21.B

X22: CONNECTOR TO OPERATOR HANDLE CABLE: 747715-1

	COLOR	WHERE FROM/TO
1	RED/VIOLET	X22.1 TO X10 JUMPER K2:COIL.24VDC JUMPER X15
2	RED/VIOLET	X22.2 TO X11 TO S2A:X7.A
3	BLACK/PINK	X22.3 TO A1:X23.1
4	BLACK/PINK	X22.4 TO S5.2

X23: I-DRIVE HARNESS: 747673

PIN #	COLOR	WHERE TO/FROM
1	BLACK/PINK	X22: P:3
2	BLACK/WHITE	X20: SPEED POT P:1
3	EMPTY	–
4	EMPTY	–
5	RED/WHITE	JUMPER TO P:7 (ON/OFF)
6	BROWN/GREEN	JUMPER TO P:14 (INHIBIT 1)
7	RED/WHITE	JUMPER TO P:5 (24VDC IDRIVE FUSED)
8	BLACK/ORANGE	X20: SPEED POT P:3
9	EMPTY	–
10	RED/YELLOW	X19: BATTERY GAUGE P:2
11	EMPTY	–
12	VIOLET/YELLOW	FORWARD/REVERSE SWITCH 4
13	BLACK/RED	JUMPER TO FOR/REV SWITCH 5
14	BROWN/GREEN	JUMPER TO P:6 (INHIBIT 2)

BATTERY CHARGER: 957937, 957938 or 957939

	COLOR	WHERE TO/FROM
X13	YELLOW	X13: KEYSWITCH P:1
X14	GREEN	X14: CONTROL CB 4.0A
14GA	WHITE	MAIN RELAY + (REAR LEFT POST)
14GA	BLACK	MAIN RELAY – (FRONT LEFT POST)

OTHER WIRE COLORS

1	RED	BATTERY 24VDC: +
2	BLACK	BATTERY 0VDC: –
3	GREEN/YELLOW	GROUND
4	BLACK/BLUE	BRUSH UNLOAD CIRCUIT
5	RED/BLACK	BRUSH UNLOAD CIRCUIT:MICRO SWITCH
6	RED/VIOLET	24VDC AFTER MAIN KEYSWITCH
7	GREY/RED	OPTIONAL POWER 24VDC: 3A MAX
8	GREY/BLACK	OPTIONAL POWER 0VDC: 3A MAX

Manufacturer PDF Provided by www.southeasternequipment.net

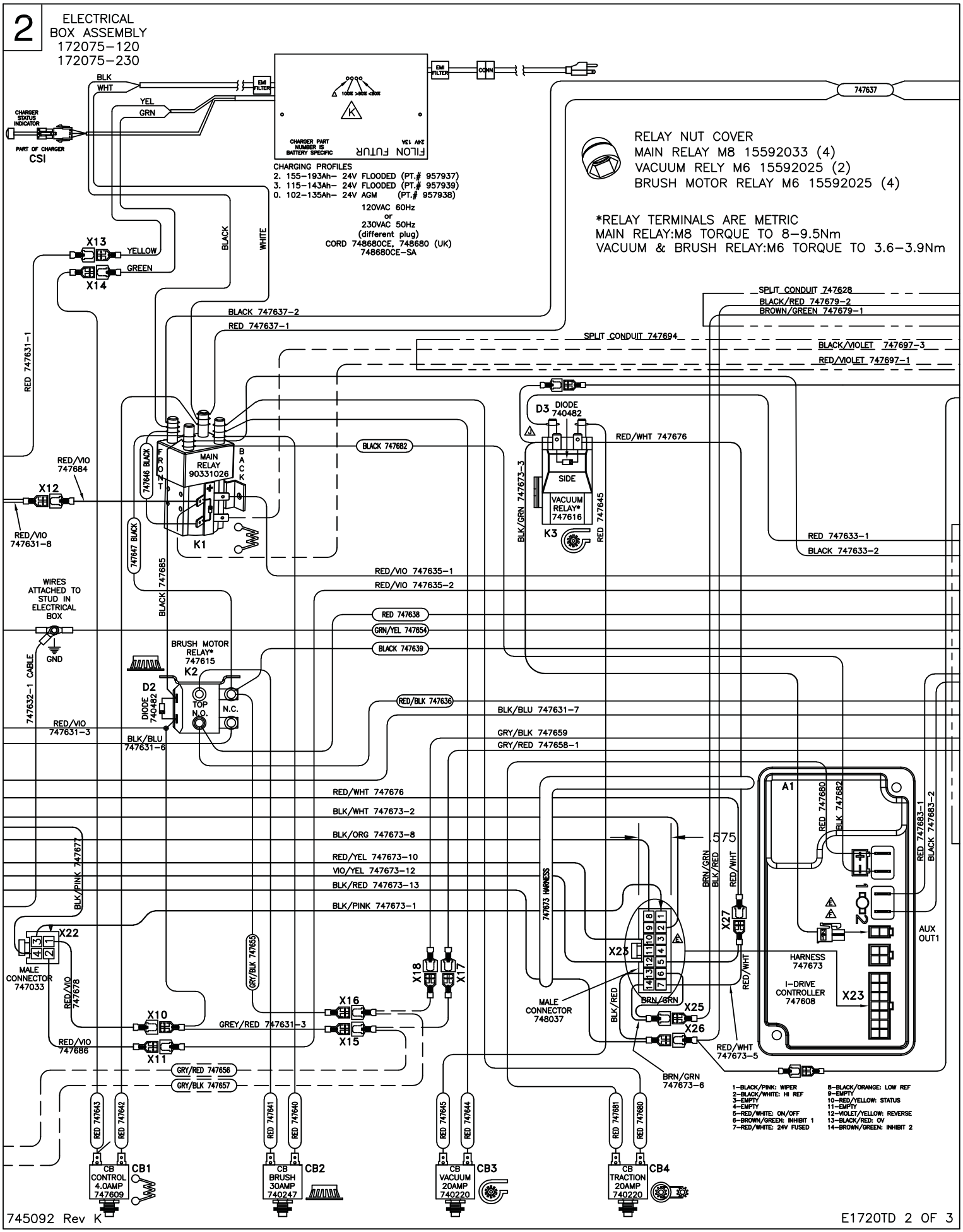

Manufacturer PDF Provided by www.southeasternequipment.net

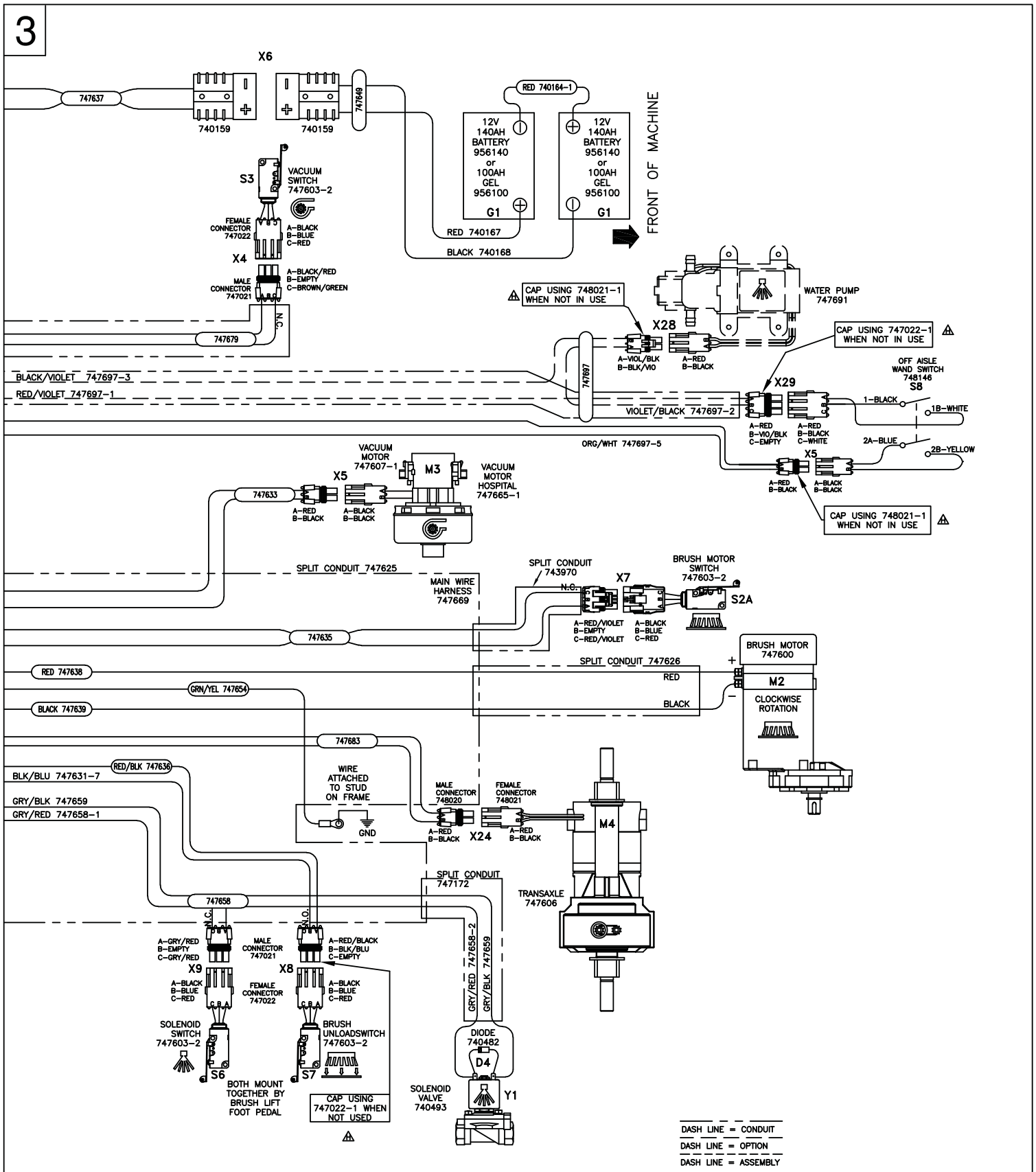

Manufacturer PDF Provided by www.southeasternequipment.net

E1720TD PART REFERENCE LIST
Schematic 745092

REFERENCE #	COMPONENT NAME	PART NUMBER
M1 (optional)	PUMP, WATER (KIT K-E1720P)	748691
M2	MOTOR, BRUSH	748692
M3	MOTOR, VACUUM ASSEMBLY	747607-1
M3 (model specific)	MOTOR, VACUUM ASSEMBLY (H20 only)	747665-1
M4	TRANSAXLE	747606
Y1	SOLENOID VALVE, WATER	740493
K1	RELAY, MAIN	90331026
K2	RELAY, BRUSH MOTOR	747615
K3	RELAY, VACUUM	747616
CB1	CIRCUIT BREAKER 4.0A, CONTROL	747609
CB2	CIRCUIT BREAKER 30A, BRUSH MOTOR	740247
CB3	CIRCUIT BREAKER 20A, VACUUM MOTOR	740220
CB4	CIRCUIT BREAKER 20A, TRANSAXLE	740220
S1	KEYSWITCH	747617
S2A	SWITCH, BRUSH MOTOR (at motor)	747603-2
S2B	SWITCH, BRUSH MOTOR (handle)	748603-1
S3	SWITCH, VACUUM MOTOR	748603-2
S4	SWITCH, TRANSAXLE (handle)	748603-1
S5	SWITCH, DIRECTION	748201
S6	SWITCH, BRUSH UNLOAD	748603-2
S7	SWITCH, SOLENOID	747603-2
S8 (optional)	SWITCH, PUMP- OFF AISLE WAND (KIT K-1720P)	747693-1
A1	CONTROLLER, I-DRIVE	747608
CSI	CHARGER STATUS INDICATOR	747614
HM (optional)	HOUR METER (KIT K-E1720HM)	747624
BC (model specific)	BATTERY CHARGER 115VAC (battery type specific)	957761 (-2 or G-4)
BC (model specific)	BATTERY CHARGER 230VAC (battery type specific)	957760 (-2 or G-4)
G1	BATTERY, 12V 140AH (2 REQUIRED)	956140
G1 (optional)	BATTERY, GEL 12V 100AH (2 REQUIRED)	956100
D1	DIODE, MAIN RELAY	Part of K1
D2	DIODE ASM, BRUSH MOTOR RELAY	740482
D3	DIODE ASM, VACUUM MOTOR RELAY	740482
D4	DIODE ASM, SOLENOID VALVE	740482

REFERENCE #	CONNECTOR FUNCTION	PART # -female	PART # -male
X1	KEYSWITCH (S1)	744012	748037
X2	SWITCH, BRUSH MOTOR (S2B)	747022	747021
X3	CHARGER STATUS INDICATOR (CSI)	Part of CSI	Part of BC
X4	SWITCH, VACUUM (S3)	747022	747021
X5	MOTOR, VACUUM (M3)	748021	748020
X6	BATTERY CONNECTOR	740159	740159
X7	SWITCH, BRUSH MOTOR (S2A)	747022	747021
X8	SWITCH, BRUSH UNLOAD (S6)	747022	747021
X9	SOLENOID VALVE, WATER (Y1)	747022	747021
X10	OPERATOR HANDLE CABLE	741093	740697
X11	OPERATOR HANDLE CABLE	740366	740697
X12	KEYSWITCH (S1)- MAIN RELAY COIL (K1)	741093	741165
X13	BATTERY CHARGER (BC)- INTERNAL RELAY	740366	740697
X14	BATTERY CHARGER (BC)-INTERNAL RELAY	740366	740697
X15	SOLENOID (Y1) /HOUR METER CONNECTION (HM)	740366	741165
X16	SOLENOID (Y1) /HOUR METER CONNECTION (HM)	740366	741165
X17 (optional)	OPTIONAL HOUR METER (HM) WIRE-747656	740366	741165
X18 (optional)	OPTIONAL HOUR METER (HM) WIRE-747657	740366	741165
X19	BATTERY GAUGE (BDI)	Part of BDI	747033
X20	SPEED POT ASSEMBLY (R1)	741298	741302
X21	SWITCH, TRANSAXLE (S4)	747022	747021
X22	OPERATOR HANDLE CABLE: 747632-1	747029	747033
X23	I-DRIVE HARNESS: 747673	Part of A1	748037
X24	TRANSAXLE (M4)	748021	748020
X25	I-DRIVE (A1) TO VACUUM SWITCH (S3)	740366-1	741165
X26	I-DRIVE (A1) TO VACUUM SWITCH (S3)	741093	740698
X27	I-DRIVE (A1) TO VACUUM RELAY-CONTACT	741093	741165
X28 (optional)	SWITCH, TOGGLE WATER PUMP (S8)	747022	747021
X29 (optional)	PUMP, OFF AISLE WAND (M1)	748021	748020

Last Updated 01/05/10

Manufacturer PDF Provided by www.southeasternequipment.net

Minuteman International Made Simple Commercial Limited Warranty

REVISION Q
EFFECTIVE 4/10/18

Minuteman International, Inc. warrants to the original purchaser/user that the product is free from defects in workmanship and materials under normal use. Minuteman will, at its option, repair or replace without charge, parts that fail under normal use and service when operated and maintained in accordance with the applicable operation and instruction manuals. All warranty claims must be submitted through and approved by factory authorized repair stations.

This warranty does not apply to normal wear, or to items whose life is dependent on their use and care, such as belts, cords, switches, hoses, rubber parts, brushes, electrical motor components or adjustments. Parts manufactured by Minuteman are covered by and subject to the warranties and/or guarantees of their manufacturers. Please contact Minuteman for procedures in warranty claims against these manufacturers.

Special warning to purchaser -- Use of replacement filters and/or pre-filters not manufactured by Minuteman or its designated licensees, will void all warranties expressed or implied. A potential health hazard exists without original equipment replacement.

All warranted items become the sole property of Minuteman or its original manufacturer, whichever the case may be.

Minuteman disclaims any implied warranty, including the warranty of merchantability and the warranty of fitness for a particular purpose. Minuteman assumes no responsibility for any special, incidental or consequential damages.

This limited warranty is applicable only in the U.S.A. and Canada, and is extended only to the original user/purchaser of this product. Customers outside the U.S.A. and Canada should contact their local distributor for export warranty policies. Minuteman is not responsible for costs or repairs performed by persons other than those specifically authorized by Minuteman. This warranty does not apply to damage from transportation, alterations by unauthorized persons, misuse or abuse of the equipment, use of non-compatible chemicals, or damage to property, or loss of income due to malfunctions of the product.

If a difficulty develops with this machine, you should contact the dealer from whom it was purchased.

This warranty gives you specific legal rights, and you may have other rights which vary from state to state. Some states do not allow the exclusion or limitation of special, incidental or consequential damages, or limitations on how long an implied warranty lasts, so the above exclusions and limitations may not apply to you.

Manufacturer PDF Provided by www.southeasternequipment.net

Model	Parts	Labor	Poly	Travel**
Cord Electric Group	5yrs	3yrs	12yrs	90 days
Battery Auto Scrubbers (incl. on board charger)	5yrs	3yrs	12yrs	90 days
Battery and Manual Sweepers	3yrs	3yrs	12yrs	90 days

Exceptions…….

Model	Parts	Labor	Poly	Travel**
Port A Scrub, all models (incl. on board charger)	1yr	6months	12yrs	90 days
A3S Blower	1yr	1yr	0	0
Phenom Dual Motor Upright Vacuums	2yrs	2yrs	0	0
Explosion Proof Vacuum	1yr	1yr	0	0
Propane Burnisher	1yr	1yr	0	90 days
E14BQP and E14115 scrubber	1yr	1yr	12yrs	90 days
EZ-Mop	1yr	1yr	0	90 days
ROS-17	1yr	1yr	0	90 days
				**Travel, 2 hours max

Stand-alone Battery Chargers:	One year
Replacement Parts:	Ninety days
Batteries:	0-3 months full replacement, 4-12 months pro-rate
Polypropylene Plastic Tanks:	12yr warranty, no additional labor

Manufacturer PDF Provided by www.southeasternequipment.net

Minuteman®
Excellence Meets Clean

"Excellence Meets Clean"

Minuteman is a Full Line Manufacturer of Sweepers and Scrubbers, for Industrial Facilities.

14N845 U.S. Route 20, Pingree Grove, IL 60140 USA
Phone (800) 323-9420 - www.minutemanintl.com
A Member of the Hako Group

988721 Rev H 07/20