Manufacturer PDF Provided by www.southeasternequipment.net

Minuteman®
Excellence Meets Clean

Parts Manual
E20 Floor Scrubber
Traction Drive Cylindrical

Technical Specifications

Manufacturer PDF Provided by www.southeasternequipment.net

Minuteman®
Excellence Meets Clean

Model *E20 Traction Drive Cylindrical*

Model No. E20C / E20CQP / E20CQPG
E20CINT / E20CQPINT / E20CQPGINT

	E20
Current (Max)	40 amps
Battery Capacity (Lead Acid)	140Ah @20 hr
Battery Capacity (Gel)	95Ah @20 hr
Sound Level	69 dBA
Cleaning path width	20 in (51 cm)
Squeegee width	34 in (86 cm)
Productivity (Traction Drive)	27,280 ft^2/hr (2,534 m^2)
Working speed (Traction Drive)	3.1 mph (5 km per hr)
Rated voltage	24 volts
Vacuum flow	65 cfm (110 m^3/hr)
Vacuum waterlift	45 inches (112mbar)
Vacuum power	.60 HP (450 W)
Brush type	Cylindrical
Brush motor(s) power	3/4 HP (560W)
Number of brushes	2
Brush RPM	600 RPM
Solution capacity	12 Gal (45 liters)
Recovery capacity	13 Gal (49 liters)
Working Grade	2%
Weight with batteries	370 lbs (168 kg)
Weight without batteries	235 lbs (107 kg)
Dimensions (LxWxH)	44.5 x 24.0 x 38.0 (113.0 x 61.0 x 96.5 cm)
Drive Motor Power	1/5 HP (150W)

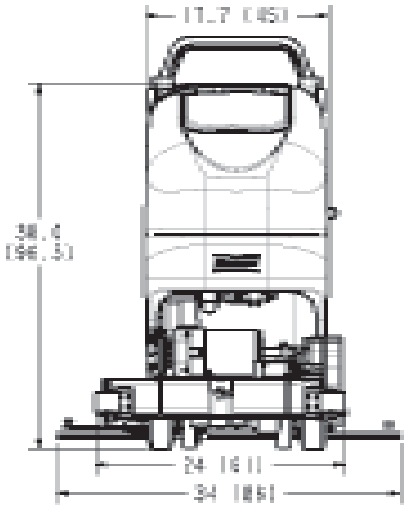

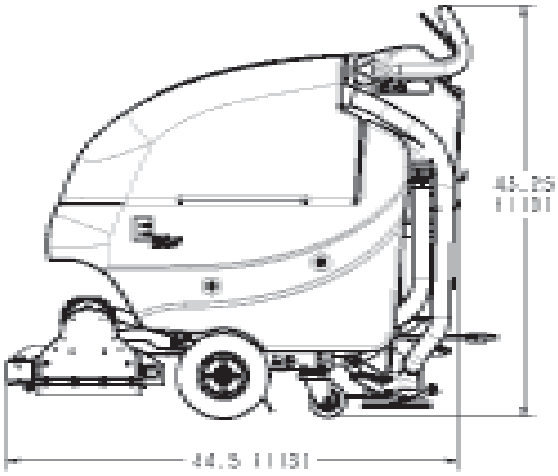

For Safety When Servicing or Maintaining Machine

- Stop on level surface.
- Disconnect the power to the machine by pulling the red Battery Connector located under the recovery tank near the batteries.
- Avoid moving parts. Do not wear loose jackets, shirts, or sleeves when working on machine.
- Avoid contact with battery acid. Battery acid can cause burns. When working on or around batteries, wear protective clothing and safety glasses. Remove metal jewelry. Do not lay tools or metal objects on top of batteries.
- Do not clean machine with a pressure washer.
- Authorized personnel must perform repairs and maintenance. Use Minuteman supplied replacement parts.

Manufacturer PDF Provided by www.southeasternequipment.net

Minuteman®
Excellence Meets Clean

Table of Contents

Technical Specifications 2
Main Assembly 4
Main Assembly BOM 5
Traction Drive Base Assembly 6
Traction Drive Base Assembly BOM 7
Chassis Assembly 8
Chassis Assembly BOM 9
Solution Valve Assembly 10
Solution Tank Assembly 11
Lift Pedal Stop Assembly 12
Battery Tray Assembly 13
Recovery Tank Assembly 14
Recovery Tank Assembly BOM 15
Handle Assembly 16
Pump Assembly 17
Electrical Box Assembly 18
Electrical Box Assembly BOM 19
Electrical Box Cover Assembly 20
Vac Motor Assembly 21
E20 Tension Band Sub-Assembly 22
20” Cyl. Deck Assembly 23
Cylindrical Scrubdeck 24
Cylindrical Scrubdeck BOM 25
Cylindrical Scrubdeck SubAssy I - Idler Support 26
Cylindrical Scrubdeck SubAssy II - Gear Support 27
E20 Rear Squeegee Assembly 28
E20 Rear Squeegee Assembly BOM 29
Squeegee Mechanism Assembly 30
Wiring Diagrams 32
Warranty 36

Manufacturer PDF Provided by www.southeasternequipment.net

Main Assembly

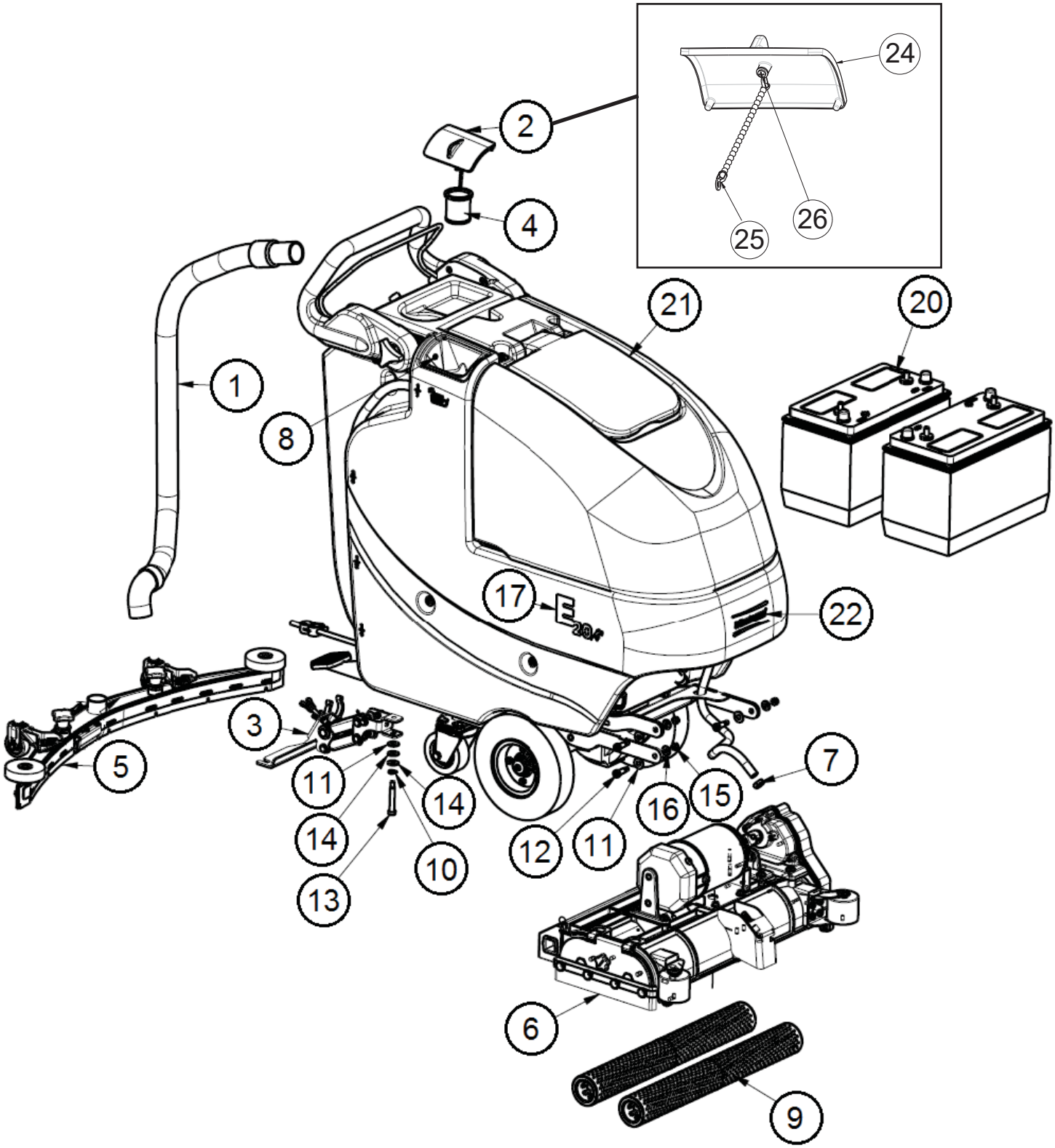

Manufacturer PDF Provided by www.southeasternequipment.net

BILL OF MATERIAL - E20CQP			
ITEM	PART NO.	QTY	DESCRIPTION
1	172010	1	HOSE, CLEAR VAC W/ 45 CUFF
2	172018	1	SOLUTION TANK LID ASSY
3	172150	1	SQUEEGEE LIFT MECH ASSY
4	172159	1	FILTER, FILL PORT, ES1720
5	172534	1	SQUEEGEE, 34" (860)
6	172325	1	E20 CYL DECK ASSY
7	450076	1	CLAMP-CRIMP 185R SS
8	711118	1	SCR-ST-A 10 X .75 SS
9	172320-2	1	20" CYLINDRICAL POLY BRUSH
10	711523	1	WSR-WAVE .37X .68 X .08
11	711569	4	WSR-FLT .390 X .880 X .062 NYL
12	712081	3	SHOULDER BLT 5/16-18 X 3/8 X .75
13	712143	1	BLT-SHLD 3/8 X 2.0, 5/16-18
14	712301	2	WSR-FLAT .37 X .87 X .06
15	712683	3	NUT, HEX 5/16-18 NYLOC SS
16	712772	3	WSR-FLAT .344 x .75 x .06 SS
17	715920	2	DECAL, E20
18	740164-1	1	JUMPER CABLE ASSY, RED 4G 12" (NOT SHOWN)
19	747649	1	CABLE ASSY, BATTERY E17 (NOT SHOWN)
20	956140	2	BATTERY, 12V 140AH
20G	956100		BATTERY-AGM 12V 100AH
21	REF ONLY	1	CYL BASE ASSY-120V CHARGER
22	715914W	1	DECAL, MINUTEMAN W/SWOOSHES, WHITE
24	172008	1	SOLUTION TANK LID
25	172123	1	CHAIN, BEADEDSS W / EYELETS
26	712145	1	SCR-PAN HD HI/LO 6-19 X .37 SS

BRUSH OPTIONS	
172320-1	BRUSH, 20" NYLON
172320-2	BRUSH, 20" POLY
172320-3	BRUSH, 20" GRIT

Manufacturer PDF Provided by www.southeasternequipment.net

Traction Drive Base Assembly

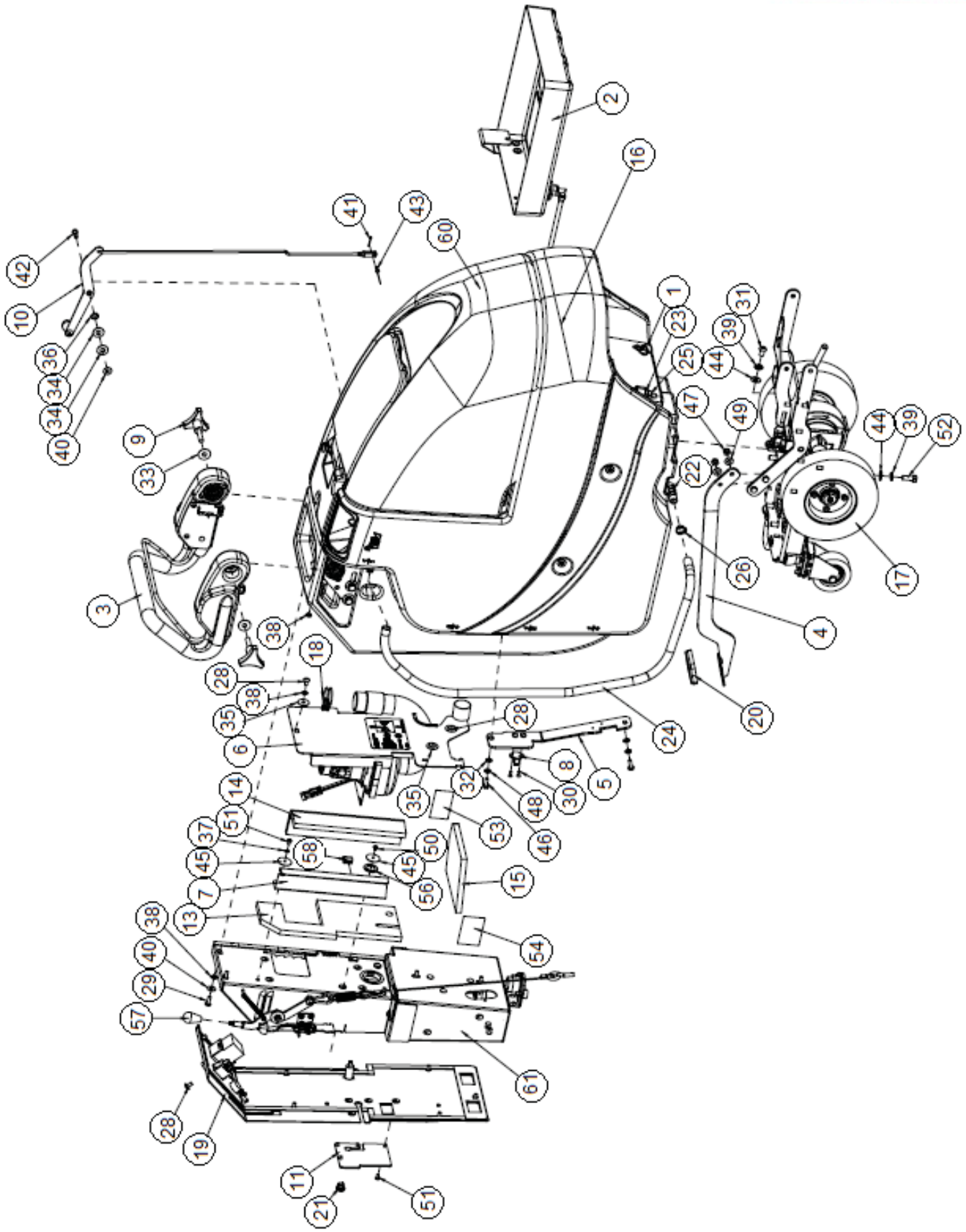

Manufacturer PDF Provided by www.southeasternequipment.net

BILL OF MATERIAL - 172001C - 120/230							
ITEM	PART NO	QTY	DESCRIPTION	ITEM	PART NO	QTY	DESCRIPTION
1	82-54-A	1	CLAMP, MS21333-114	32	711504	2	WSR-FLAT 1/4 ID SS
2	172012	1	BATTERY TRAY ASSY	33	711507	2	WSR-FLAT .37 X 1.12 X .06
3	REF ONLY	1	E1720 TD HANDLE ASSY	34	711508	2	WSR-FLAT .44X 1.0X.08
4	172032	1	LIFT PEDAL WMT	35	711519	3	WSR- FLAT .25 X 1.01 X .06
5	172036	1	BKT, PEDAL STOP	36	711523	1	WSR-WAVE .37X .68 X .08
6	172050	1	VAC MOTOR ASSY	37	711543	1	WSR-HELICAL #10
7	172055	1	BKT, VAC AREA INSIDE COVER	38	711544	9	WSR-HELICAL 1/4
8	172065	1	CLIP, FOR 1/2" ID HOSE	39	711546	6	WSR-HELICAL 3/8
9	172085	2	KNOB, 3/8-16 STUD, 3 LOBE	40	711575	6	WSR-FLT .31x.75x..06ST
10	172112	1	SOL CONTROL ASSY	41	711803	1	COTTER PIN
11	172129	1	BKT, PWR CORD MOUNT	42	712041	1	BLT- SHLDR .31 X .375 X 1/4-20
13	172184	1	FOAM COVER, REAR 1	43	712117	1	CLEVIS PIN 3/16
14	172185	1	FOAM COVER, REAR 2	44	712301	6	WSR-FLAT .37 X .87 X .06
15	172187	1	FOAM COVER, FRONT 2	45	712312	2	WSR-FLAT .187 X 1.25
16	172305	1	PUMP ASM, E20 CYL	46	712562	2	BOLT-HH 1/4-20X3/4 SS
17	REF ONLY	1	CHASSIS ASM, E20 CYL	47	712683	2	NUT, HEX 5/16-18 NYLOC SS
18	3303255	1	CLAMP-HOSE 1.75 DIA NOMINAL	48	712758	2	WSR-HELICAL 1/4 SS
19	172330	1	CYL ELEC BOX COVER ASSY	49	712772	2	WSR-FLAT .344 x .75 x .06 SS
20	210142	1	PEDAL PAD	50	712800	1	SCR-MC 10-24 X .25 ST PL
21	293080	1	STRAIN RELIEF-HEYCO 1207	51	712810	5	SCR-MC 10-24 X .37 ST PL
22	342440	1	FITTING, TEE 3/4MPT 1/2BARB	52	713042	4	BLT-HH 3/8-16 X 1 #5
23	342441	1	FITTING, MGHT X 3/8HB PP	53	715029	1	DECAL-NAME PLATE SERIAL
24	430156	1	HOSE, 1/2 X 42 CLEAR	54	715047	1	DECAL-CLEAR LAMINATE 2X3
25	450076	1	CLAMP-CRIMP 185R SS	55	715950	1	LABEL, PATENT NUMBERS
26	450093	1	CRIMP CLAMP 3/4" STEPLESS	56	717025	1	WSR-FLAT 13/16ID X 1.25 X .08
28	710178	10	SCR-MC 1/4-20 X .50 TRUSS STPL	57	760592	1	KNOB, OVAL TAPERED
29	710380	5	SCR-MC RD HD 1/4-20 X .75 STL PL	58	809443	1	CLIP-WIRE & CORD
30	710530	2	SCR-MC FL HD 8-32 X .50 BRS	60	REF ONLY	1	E1720 BASE ASSY
31	710985	2	SCR-SC 3/8-16 X .62 ST PL	61	172075C-120	1	CYL ELEC BOX ASSY-120V

Manufacturer PDF Provided by www.southeasternequipment.net

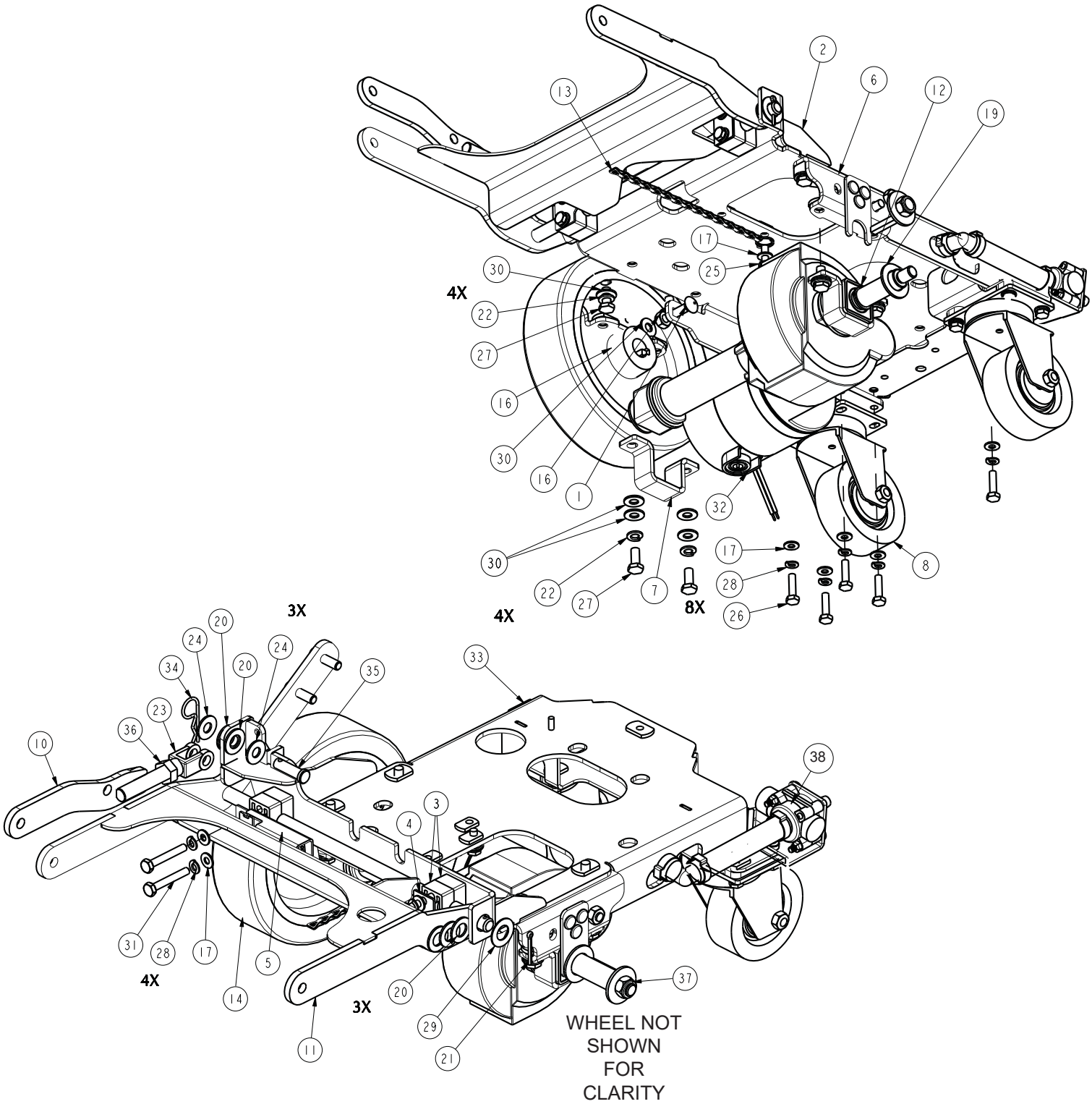

Manufacturer PDF Provided by www.southeasternequipment.net

BILL OF MATERIAL - 172315			
ITEM	PART NO.	QTY	DESCRIPTION
1	70-516-16	2	BLT-CARR 5/16-18 X 1 ZP
2	172020	1	E1720 MAIN FRAME WMT
3	172038	4	BEARING BLOCK
4	172039	1	BEARING BLOCK PLATE
5	172110	1	DECK SWITCH ASSY
6	172113	2	BKT, TRANSAXLE MOUNT BASE
7	172114	2	BKT, TRANSAXLE MOUNT
8	172167	2	CASTER, 3 1/2" PU WHEEL
10	172204	1	UPPER LIFT ARM WMT
11	172205	1	DECK LIFT WMT
12	172425	2	RING-RET EXT .75/20mm HD
13	172516	1	DRAG CHAIN, SS, 8" W/ RING
14	172518	2	WHEEL, 8X2 PU GROOVED
15	172519	2	KEY-SQUARE 6MM X 45MM
16	711383	4	NUT-HEX 5/16-18 ZP REVERSE LOC
17	711504	13	WASHER-FLAT 1/4 SS
18	711510	2	WASHER-FLAT 1/2 X 1.37 X .10 ZP
19	711512	2	WASHER-FLAT 3/4 X 1.37 X .08 ZP
20	711592	7	WASHER-FLAT 1/2 X .90 X .064 NYLON
21	711809	1	PIN-COTTER 1/8 X 1 SS
22	712140	8	WASHER-LOCK 5/16 SPLIT SS
23	712265	1	CLEVIS-YOKE, 1/2-20 WITH .375 PIN
24	712301	2	WASHER-FLAT 3/8 X .87 X .06 ZP
25	712562	1	SCR-HH 1/4-20 X .75, 18-8 SS
26	712564	8	SCR-HH 1/4-20 X 1.00 SS
27	712575	8	SCR-HH 5/16-18 X .75 18-8 SS
28	712758	12	WASHER-LOCK 1/4 SPLIT SS
29	712760	1	WASHER-FLAT .56 X 1.06 X .04 SS
30	712772	14	WASHER-FLAT .344 X .75 X .06 SS
31	713006	4	BLT-HH 1/4-20 X 1.75 #5
32	747606	1	TRANSAXLE, E1720 24V
33	809444	1	CLIP-CORD
34	833374	1	PIN-HAIRPIN COTTER 3/8
35	833833	1	PIN-CLEVIS 3/8 X 1.25
36	3400449	1	NUT-JAM 1/2-20 ZP
37	12040077	2	NUT-NYLOC M12 X 1.75 ZD CLASS 8
38	172571	1	ASSY-SOLUTION VALVE E1720

Manufacturer PDF Provided by www.southeasternequipment.net

Solution Valve Assembly

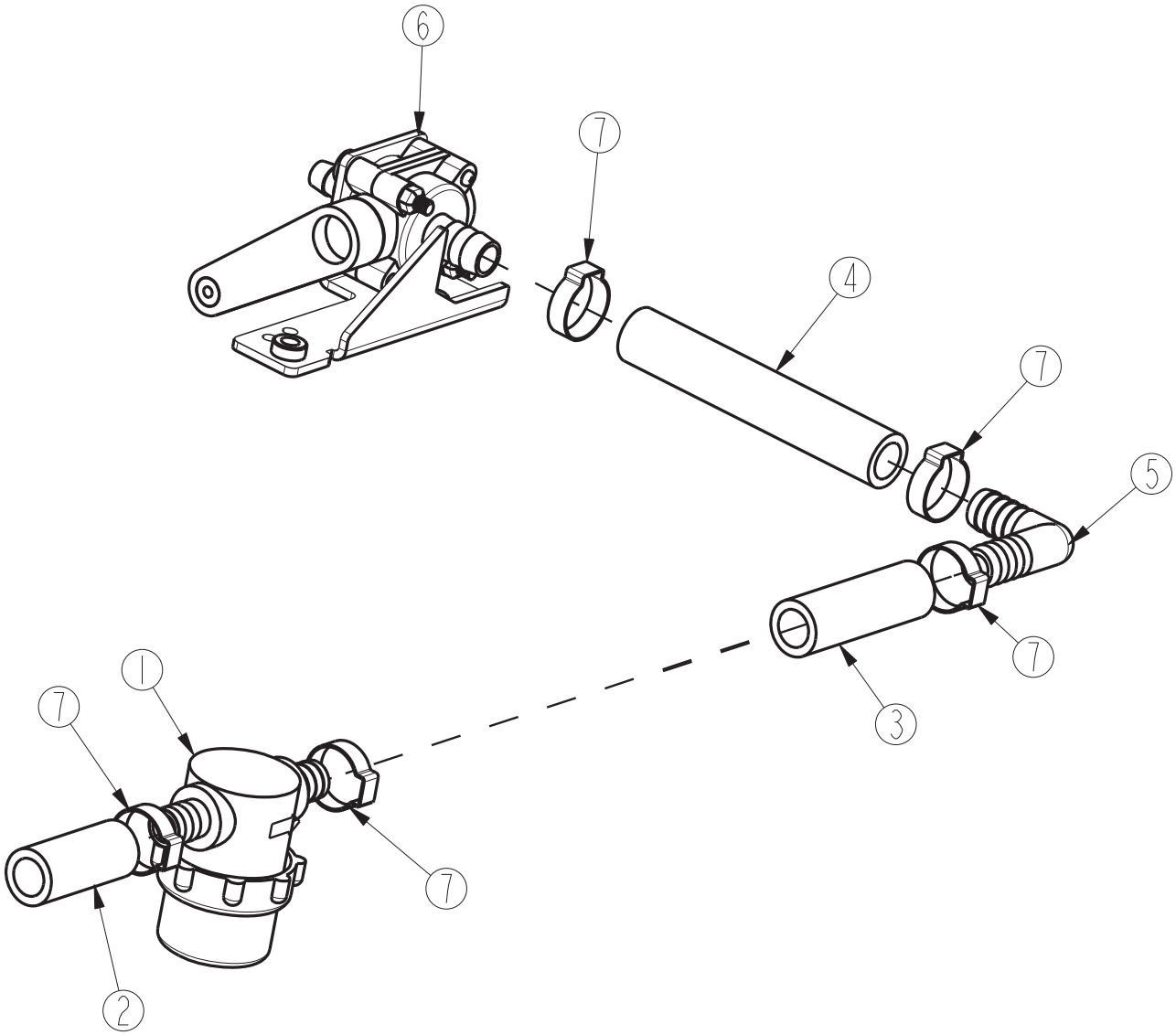

BILL OF MATERIAL - 172571			
ITEM	**PART NO.**	**QTY**	**DESCRIPTION**
1	172564	1	FILTER-SOLUTION E1720
2	172566	1	HOSE- 1/2ID X 1.75" NYLOBRAID
3	172567	1	HOSE-1/2"ID X 2.375" NYLOBRAID
4	172568	1	HOSE-WIRE REINF 1/2"ID X 4.25"
5	172569	1	FTG-ELBOW 90 1/2 HB X 1/2 HB NYLON
6	172579	1	SOLUTION CNTRL VALVE, WITH BRKT
7	383347	5	CLAMP-CRIMP 1/2 HOSE

Manufacturer PDF Provided by www.southeasternequipment.net

Solution Tank Assembly

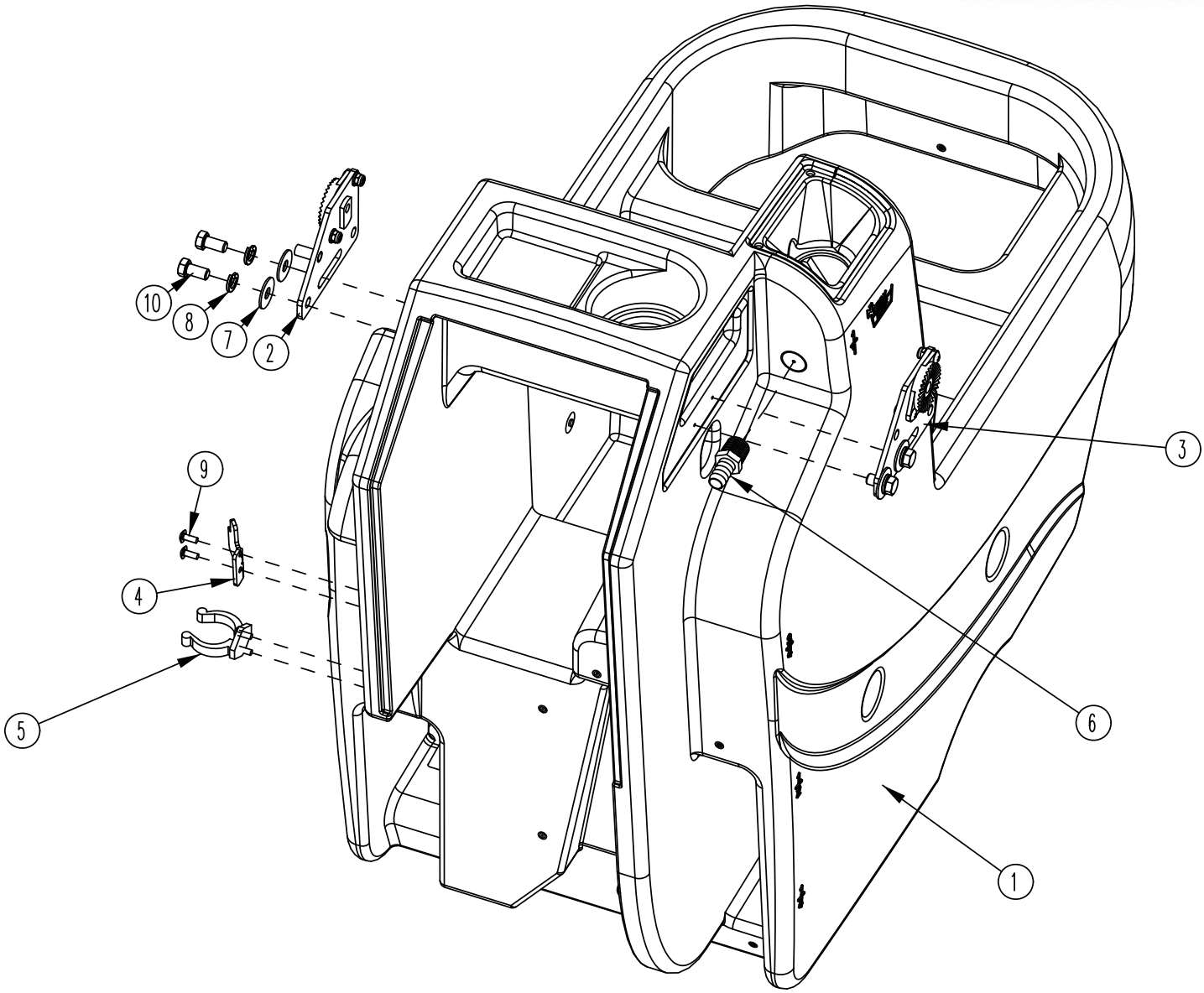

BILL OF MATERIAL - 172013			
ITEM	PART NO.	QTY	DESCRIPTION
1	172003	1	SOLUTION TANK
2	172080	1	HANDLE MOUNT ASSY, LEFT
3	172082	1	HANDLE MOUNT ASSY, RIGHT
4	172341	1	HOOK, DRAIN HOSE WITH TWIST VALVE
5	260579	1	TOOL CLIP, 1.5" HOSE
6	342438	1	FITTING, 1/2 MPT 1/2 HB BRASS
7	711507	4	WSR-FLAT .37 X 1.12 X .06
8	711546	4	WSR-HELICAL 3/8
9	712822	4	SCR-MC TR HD 10-24 X .50 SS
10	713041	4	BLT-HH 3/8-16 X 3/4 #5

Manufacturer PDF Provided by www.southeasternequipment.net

Lift Pedal Stop Assembly

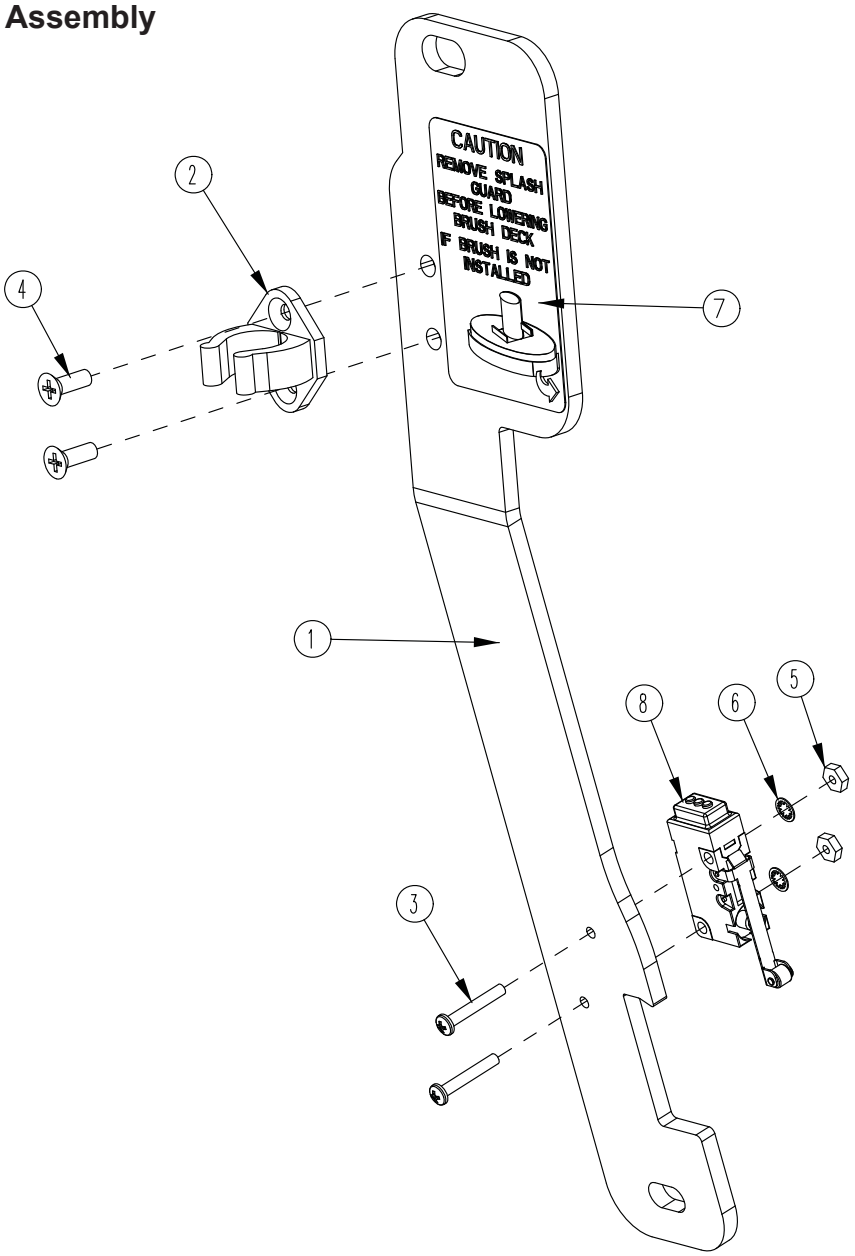

BILL OF MATERIAL - 172157			
ITEM	**PART NO.**	**QTY**	**DESCRIPTION**
1	172036	1	BKT, PEDAL STOP
2	172065	1	CLIP, FOR 1/2" ID HOSE
3	710493	2	SCR-MC 4-40 X .75 PAN HD
4	710530	2	SCR-MC FL HD 8-32 X .50 BRS
5	711428	2	NUT-HEX 4-40
6	712326	2	WSR-INT LOCK #4
7	715685	1	DECAL, REMOVE SPLASH GUARD
8	747603-2	1	SWITCH ASY, MICRO ROLLER W/PACK/CONDUIT

Manufacturer PDF Provided by www.southeasternequipment.net

Battery Tray Assembly

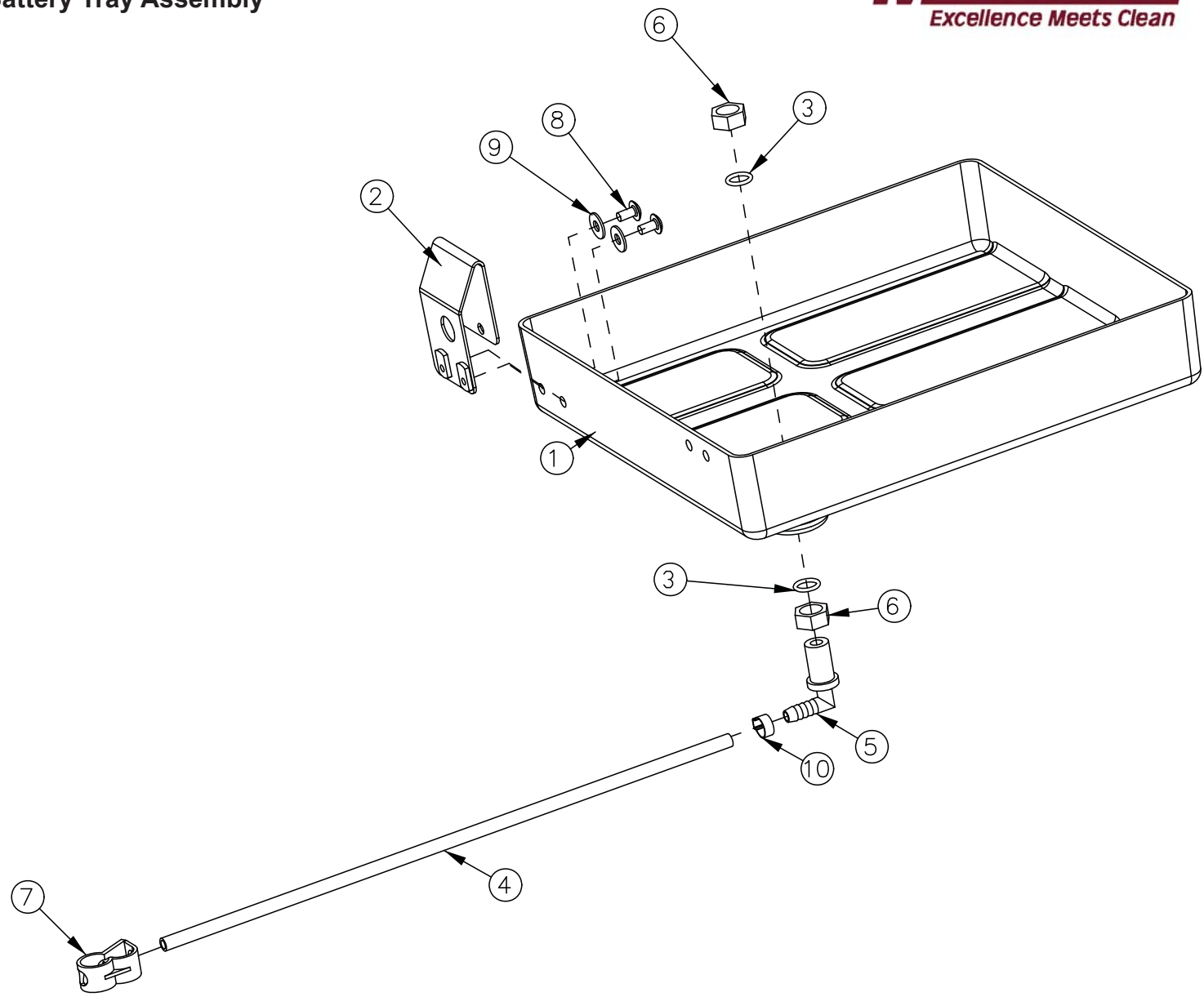

BILL OF MATERIAL - 172012			
ITEM	PART NO.	QTY	DESCRIPTION
1	172116	1	BATTERY BOX
2	172213	1	BKT, SPACER FOR BATTERIES
3	210414	2	O RING 2-113
4	260224	1	18" HOSE
5	320271	1	NOZZLE BODY-ELBOW
6	320272	2	NOZZLE BODY LOCKNUT
7	320273	1	HOSE SHUT-OFF CLAMP
8	710178	2	SCR-MC 1/4-20 X .50 TRUSS STPL
9	711575	2	WSR-FLT .31x.75x..06ST
10	828490	1	CRIMP CLAMP 140R

Manufacturer PDF Provided by www.southeasternequipment.net

Recovery Tank Assembly

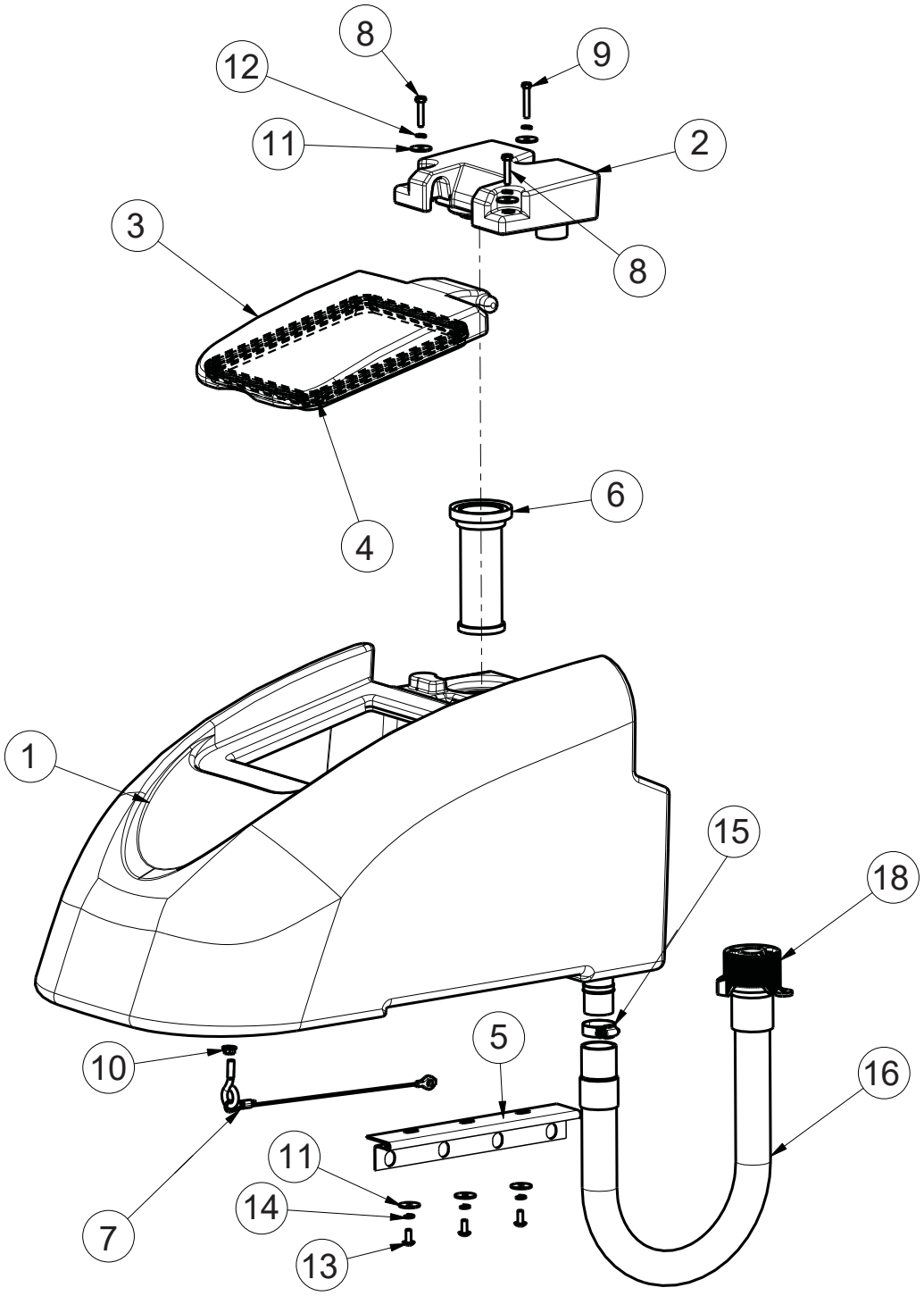

Manufacturer PDF Provided by www.southeasternequipment.net

BILL OF MATERIAL - 172014			
ITEM	**PART NO.**	**QTY**	**DESCRIPTION**
1	172004	1	ES1720 RECOVERY TANK
2	172005	1	ES1720 VACUUM MANIFOLD
3	172007	1	LID, ES1720
4	172017	1	GASKET, ES1720 LID
5	172049	1	HINGE, RECOVERY TANK
6	172132	1	FLOAT, SCREENED
7	172394	1	CABLE, REC TANK 12.0
8	711210	2	SCR-HH 1/4-20 X 1.25 ZP GR 5 FULL THRD
9	711212	1	SCR-HH 1/4-20 X 1.50 ZP GR 5
10	711379	I	NUT-FLANGED WIZZ 5/16-18 ZP
11	711519	6	WASHER-FLAT 1/4 X 1.00 X .06 ZP
12	711544	3	WASHER-LOCK 1/4 SPLIT ZP
13	712565	3	SCR-THMS 1/4-20 X .62 SS
14	712758	3	WASHER-LOCK 1/4 SPLIT SS
15	3303255	1	CLAMP-HOSE 1.75 DIA NOMINAL
16	97090096	1	DRAIN HOSE ASSY, RECOVERY TANK
17	15282072	1	REPLACEMENT O-RING (NOT SHOWN)
18	90304528	1	CAP

Manufacturer PDF Provided by www.southeasternequipment.net

Handle Assembly

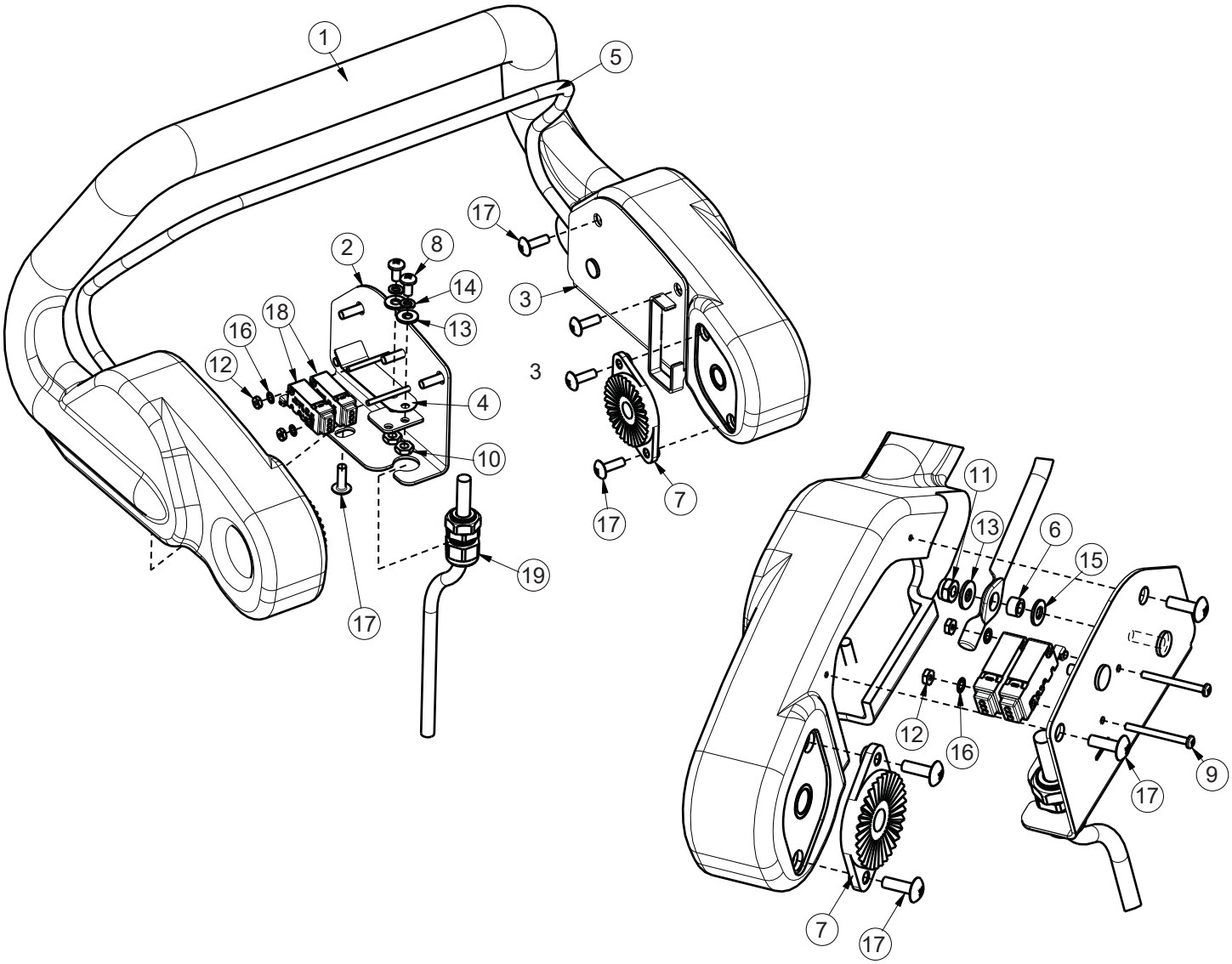

BILL OF MATERIAL - 172015							
ITEM	PART NO	QTY	DESCRIPTION	ITEM	PART NO	QTY	DESCRIPTION
1	172006	1	ES1720 HANDLE	11	711350	2	NUT-NYLOC 10-32
2	172053	1	BAIL PLATE WMT RH	12	711428	2	NUT-HEX 4-40
3	172054	1	BAIL PLATE WMT LH	13	711503	6	WSR, FLAT#10
4	172057	2	ES1720 LEAF SPRING	14	711543	4	WSR-HELICAL #10
5	172059	1	ES1720 BAIL, HANDLE	15	712320	2	WSR-NYLON .22 X.45 X.04
6	172074	2	SPACER, 5/16OD X 17GA, ALUM	16	712326	2	WSR-INT LOCK #4
7	270143	2	HANDLE PIVOT JAW	17	712830	10	SCR-MC 10-24 X.62 STLZ TR HD
8	710353	4	SCR-MC RD HD 10-32 X.37 STL	18	747603-3	2	SWITCH ASY, MICRO ROLLER W/ PACK/CONDUIT
9	710495	2	SCR-MC 4-40 X 1.25 STL Z	19	747715-1	1	CABLE ASY, 5 COND 18G TD
10	711310	4	NUT, HEX 10-32 ST PL				

Manufacturer PDF Provided by www.southeasternequipment.net

Pump Assembly

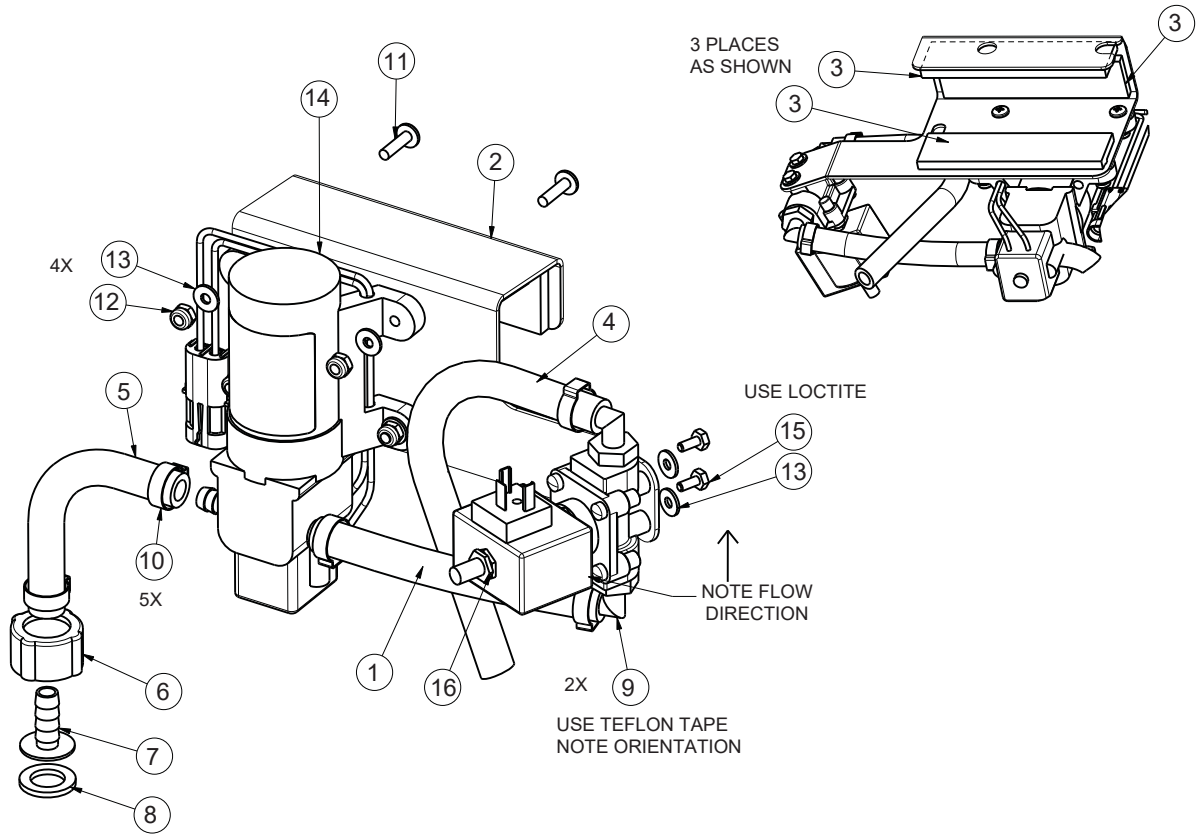

BILL OF MATERIAL - 172305			
ITEM	**PART NO.**	**QTY**	**DESCRIPTION**
1	172164	1	HOSE-WIRE REINF 3/8 X 5.5
2	172302	1	BKT, PUMP MOUNT
3	172304	3	FOAM .25 X 1.25 X 5 W/ ADH
4	241097	1	HOSE-WIRE REINF 3/8 X 31"
5	320254	1	HOSE-WIRE REINF 3/8 x 9"
6	342442	1	FITTING, FGHT NUT PP
7	342443	1	FITTING 3/8HB INSERT PP
8	342444	1	WSR-FILTER, GARDEN HOSE SIZE
9	450040	2	FITTING-90 3/8MPT X 3/8BARB NYLON
10	450076	5	CLAMP-CRIMP 185R SS
11	712537	4	10-24 X .75 SS TRUSS HD SCR
12	712638	4	NUT, HEX 10-24 SS NYLOC
13	712764	6	WSR #10 SS
14	747691	1	PUMP, 24VDC 35PSI 3/8HOSE w/CONNECTOR
15	11038965	2	BOLT-HH M4X0.7 X 10 Z DICH
16	90435595	1	WATER SOLENOID, 24VDC 2.5BAR

Manufacturer PDF Provided by www.southeasternequipment.net

Electrical Box Assembly

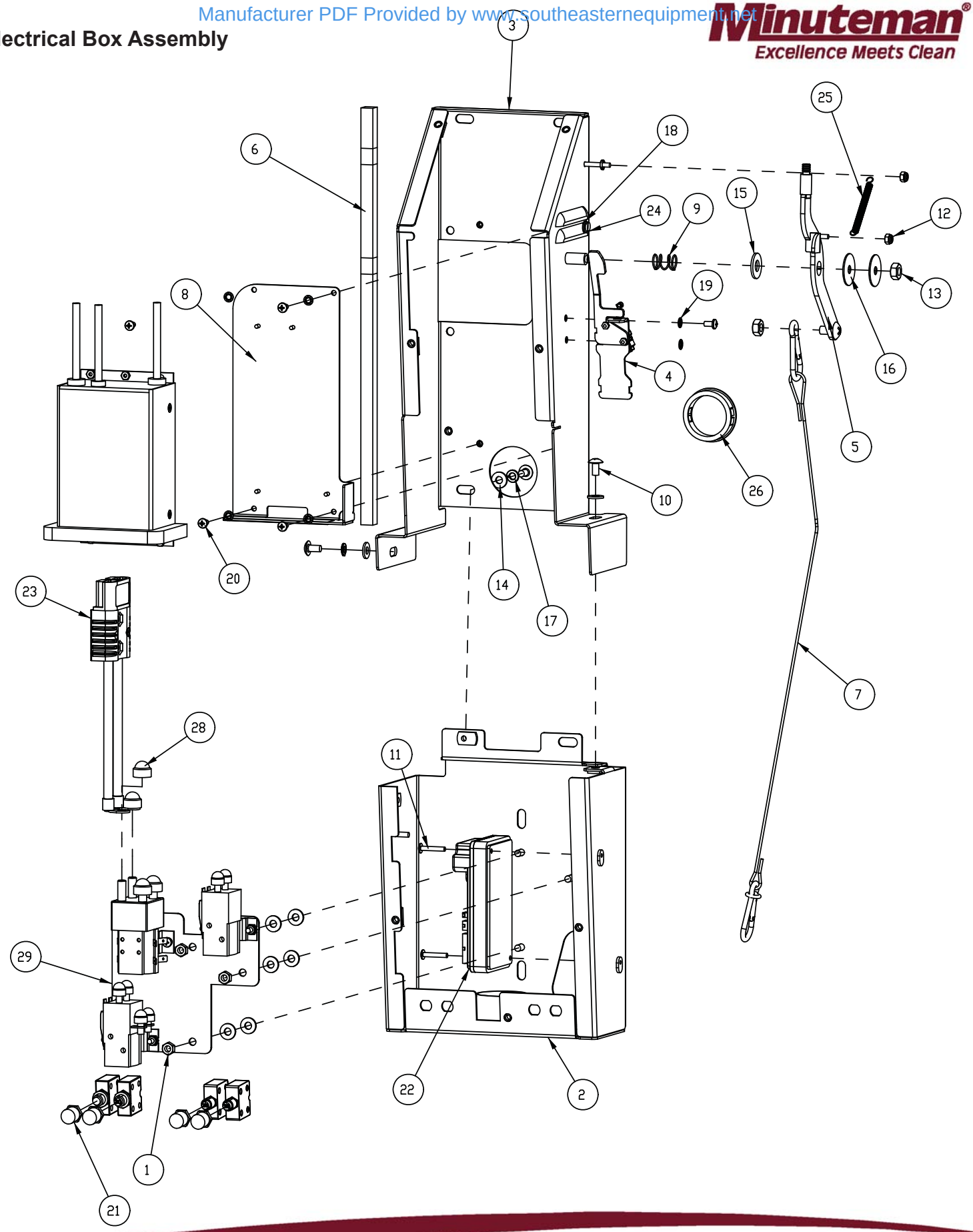

Manufacturer PDF Provided by www.southeasternequipment.net

BILL OF MATERIAL - 172075C-120			
ITEM	PART NO.	QTY	DESCRIPTION
1	369-416	3	NUT-HEX 1/4-20 NYLOC SERATED
2	172077	1	ELEC BOX-BOT HALF WMT
3	172088	1	ELEC BOX-TOP HALF WMT
4	172141	1	VAC SWITCH ASSY
5	172152	1	VAC LEVER WMT
6	172188	1	FOAM TAPE, 1/2" SQ X 16.5"
7	172381	1	CABLE ASSY, SQUEEGEE LIFT
8	172385	1	E1720 120V CHARGER ASSEMBLY
9	670093	1	SPRING, COMPRESSION
10	710178	3	SCR-MC 1/4-20 X .50 TRUSS STPL
11	710534	2	SCR-MC TR HD 8-32 X 1.00 SS
12	711372	2	NUT-NYLOC 8-32 STL ZINC
13	711383	2	NUT-HEX CLR LOC 5/16-18
14	711505	9	1/4 FLAT WASHER, STEEL
15	711508	1	WSR-FLAT .44X 1.0X.08
16	711516	2	WSR- FLAT .31 X 1.25 X .05
17	711544	2	WSR-HELICAL 1/4
18	712320	2	WSR-NYLON .22 X .45 X .04
19	712770	6	WSR INT LOCK #10A SS
20	712810	6	SCR-MC 10-24 X .37 ST PL
21	742748	4	CIRCUIT BREAKER BOOT
22	747608	1	I-DRIVE,24V 70A PM MOTOR CONTROL
23	747637	1	WIRE ASY, MACHINE-BATTERY E1720
24	760134	2	MOUNT RING
25	762084	1	SPRING-EXT .25OD X 2" F.L. MUSIC
26	762400	1	HEYCO BUSHING 2.00"
27	828062	1	CABLE TIE LARGE (NOT SHOWN)
28	15592033	2	CAP, SAFETYNUT COVER M8
29	747670C	1	ELEC PANEL ASSY, E20C

Manufacturer PDF Provided by www.southeasternequipment.net

Electrical Box Cover Assembly

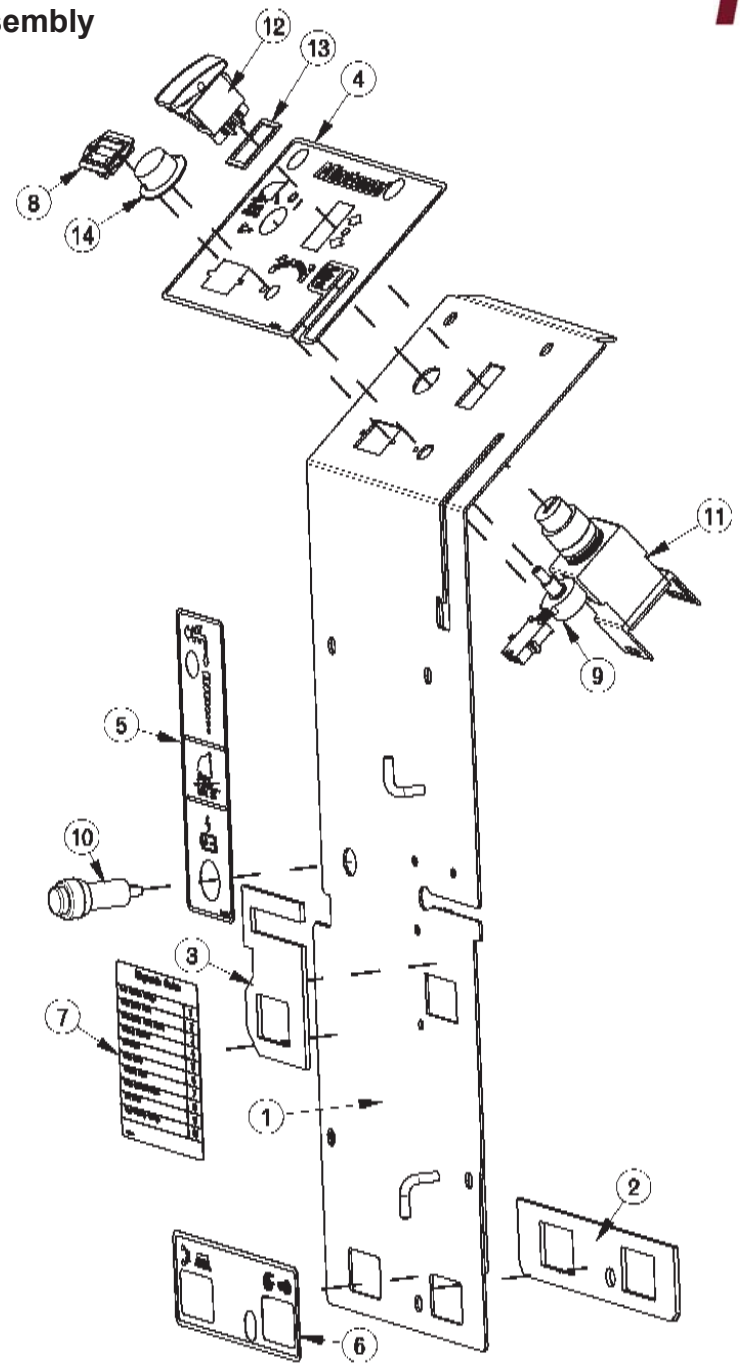

BILL OF MATERIAL - 172330							
ITEM	PART NO	QTY	DESCRIPTION	ITEM	PART NO	QTY	DESCRIPTION
1	172182	1	TD COVER WMT	8	747011	1	BATTERY GAUGE, TRUCHARGE
2	172193	1	GASKET, CB OUTLINE	9	747026	1	POTENTIOMETE0R ASSY
3	172194	1	GASKET, CHARGER CORD PLATE	10	747614	1	CHARGE STATUS INDICATOR
4	715680	1	DECAL, DASHBOARD E20 CYL	11	90323437-1	1	KEYSWITCH ASSEMBLY
5	715672	1	DECAL, CHARGE STATUS	12	748201	1	SWITCH, DPDT ON/OFF/ON
6	715674	1	DECAL, TD CIRCUIT BREAKER	13	748209	1	GASKET-FOR 2 POLE ROCKER SWITCHES
7	715699	1	DECAL, DIAGN. CODES, NARROW	14	809874	1	KNOB, SPEED CONTROL

Manufacturer PDF Provided by www.southeasternequipment.net

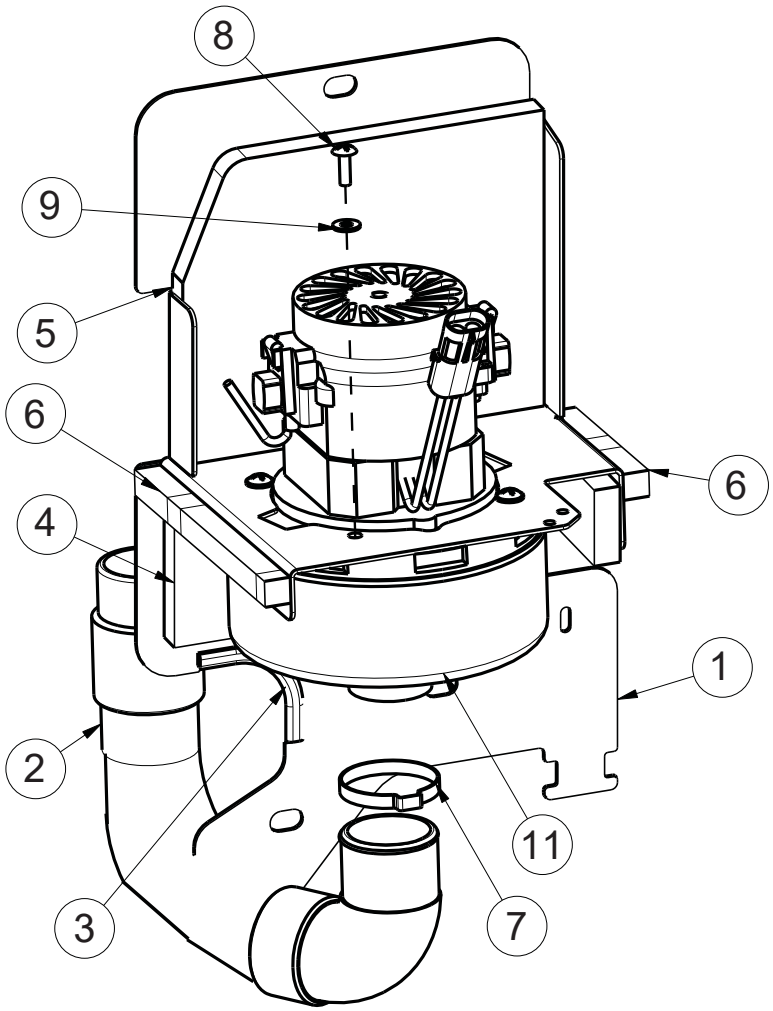

BILL OF MATERIAL - 172050			
ITEM	PART NO.	QTY	DESCRIPTION
1	172045	1	VAC MOUNT WMT
2	172048	1	HOSE, STRETCH 13", 90 CUFF
3	172124	1	EDGE TRIM, .063 X 3.0, BLACK
4	172186	1	FOAM COVER FRONT 1, 1/2 THICK
5	172187	1	FOAM COVER FRONT 2, 1/2" THICK
6	172188	.5	FOAM TAPE, 1/2" SQ X 16.5"
7	450095	1	CLAMP-CRIMP 1.75" OD
8	711160	4	SCR-HI/LO 10 X .625 BLACK ZINC
9	711503	4	WASHER-FLAT #10 X .50 ZP
10	715967	1	DECAL - WARNING, DO NOT PICK UP (NOT SHOWN)
11	747607-1	1	VAC MOTOR ASY, 24V PERIF BYPASS

Manufacturer PDF Provided by www.southeasternequipment.net

E20 Tension Band Sub-Assembly

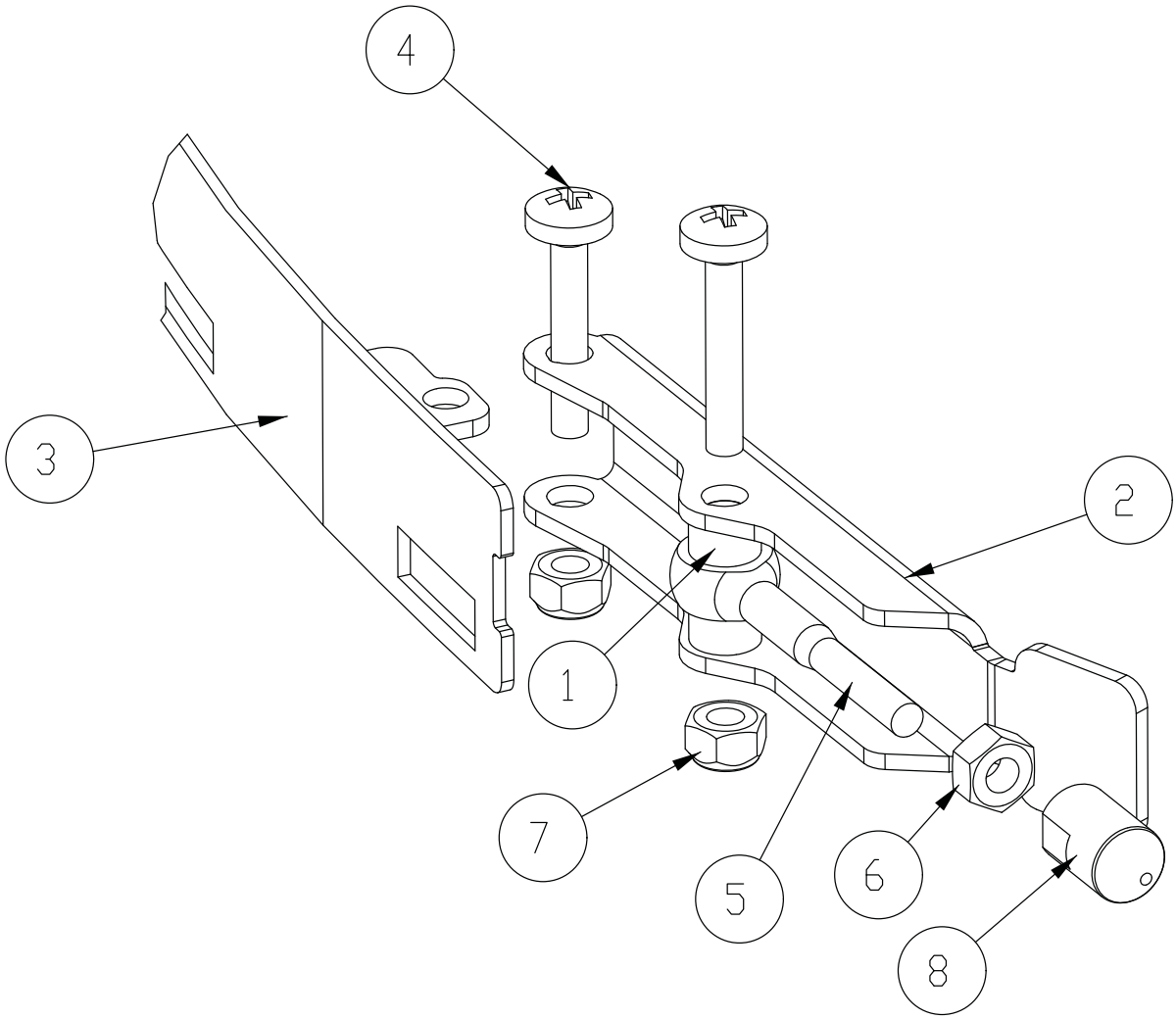

BILL OF MATERIAL - 172440			
ITEM	**PART NO.**	**QTY**	**DESCRIPTION**
1	172074	2	SPACER, 5/16OD X 17GA, ALUM
2	172234	1	LEVER, 90535758
3	172240	1	STRAP WMT, FRONT LEFT
4	11175494	2	SCR-MC M5 X 25 SS DIN7985
5	11518313	1	BLT-EYE M5 X 40 SS
6	12022430	1	NUT- HEX, M5, SS DIN934
7	12040283	2	NUT- HEX, M5 NYLON LOCK, SS DIN985
8	90513631	1	PIN, THD

Manufacturer PDF Provided by www.southeasternequipment.net

20” Cyl. Deck Assembly

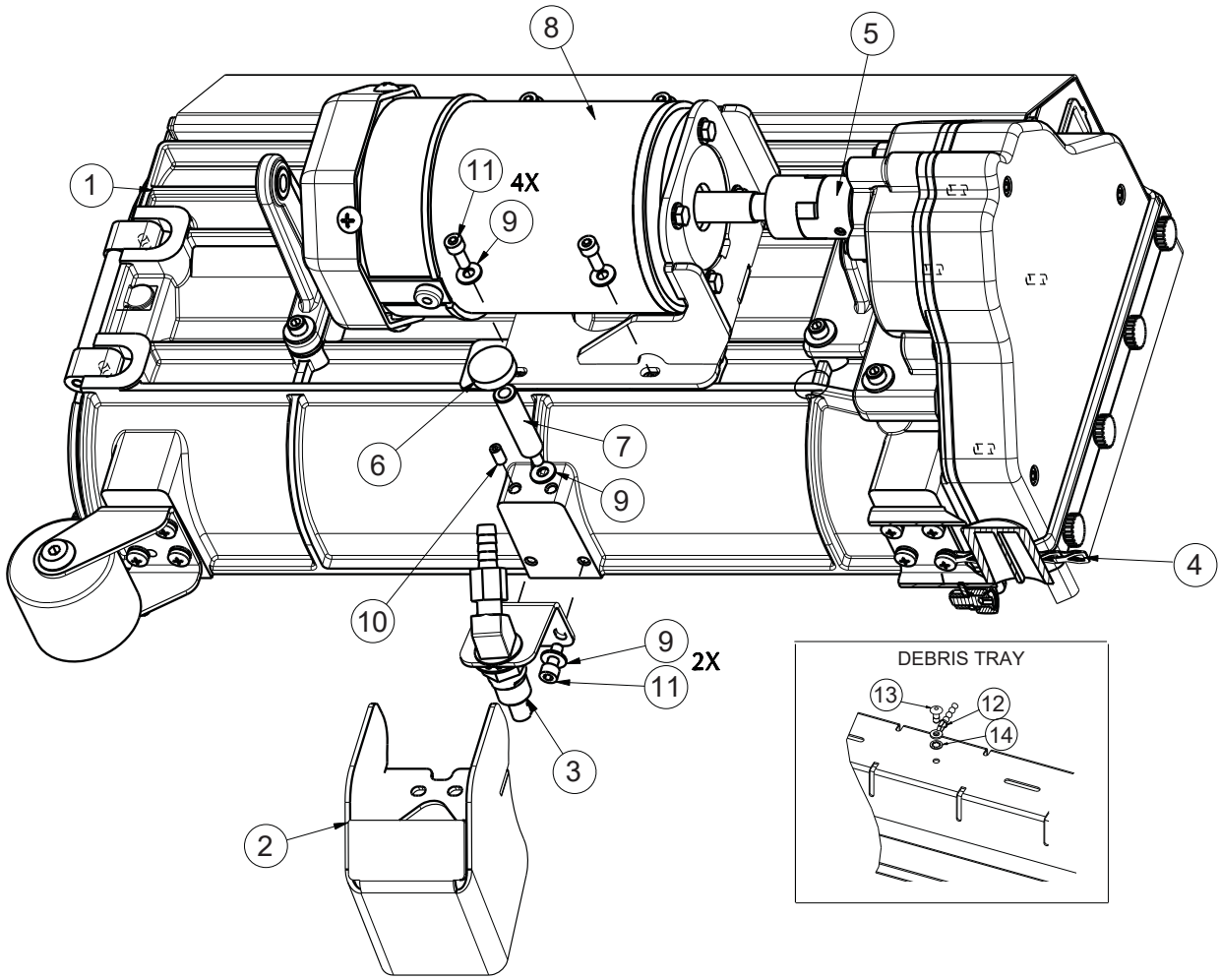

BILL OF MATERIAL - 172325			
ITEM	PART NO.	QTY	DESCRIPTION
1	172300	1	20" CYL DECK - ROOTS
2	172307	1	SPRAYJET COVER WMT
3	172312	1	SPRAY JET ASSY
4	172334	1	DRAG CHAIN ASSY, SHORT (5 LINKS)
5	172345	1	COUPLER L070 15MM 3PCS.-2 JAW/1 SPIDER
6	172353	1	KNOB, PRESS ON THUMB SCREW HEAD
7	172354	1	PIN-THD, M6 X 13 X 50 ZP
8	172355	1	E20C BRUSH MOTOR ASSEMBLY
9	711504	7	WASHER-FLAT 1/4 SS
10	712160	1	SCR-SET M6 X 12 SS CP
11	11132065	6	SCR-SHCS M6-1.0 X 16 ZD CLASS 8.8
12	172123	1	CHAIN, BEADED SS W/ EYELETS 6"
13	711923	1	RIVET-POP 3/16
14	712770	1	WASHER-INT TOOTH LOCK #10 SS

Manufacturer PDF Provided by www.southeasternequipment.net

Cylindrical Scrubdeck

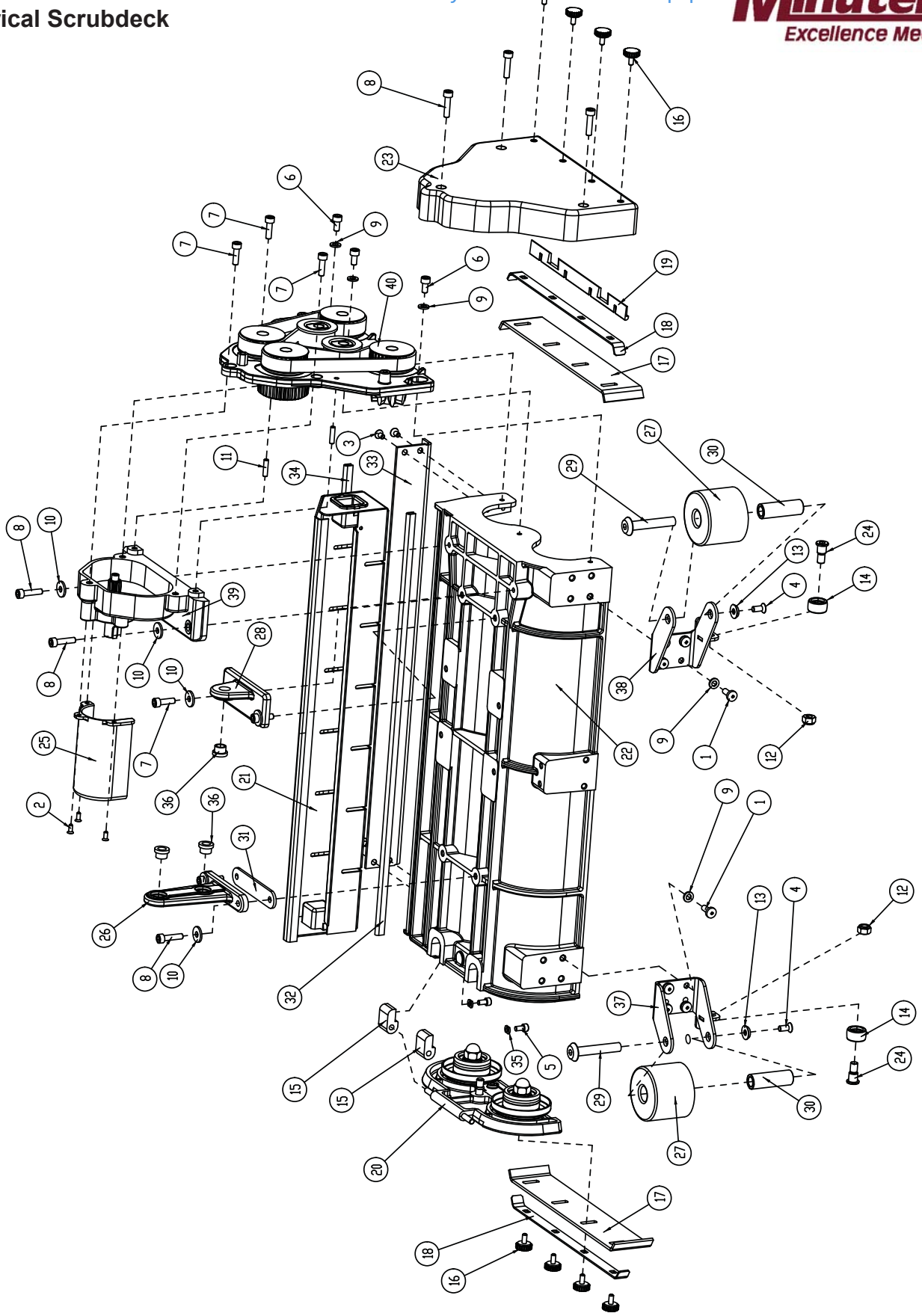

Manufacturer PDF Provided by www.southeasternequipment.net

BILL OF MATERIAL - 172300			
ITEM	PART NO.	QTY	DESCRIPTION
1	817306	8	SCR-PAN HD M6x16
2	829103	3	SCR-MC FL HD M4 X 10 SS
3	829203	4	CR-CSK-SCREW-M5X10-SS
4	829321	2	SC-FHCS M6 X 14 SS
5	831203	2	SCR-SHCS, M5X10 ZP
6	831304	3	SCR-SHCS, M6X12 ZP
7	831307	5	SCR-SHCS, M6X20 ZP
8	831308	7	SCR-SHCS, M6X25 ZP
9	844061	11	WASHER-6_4X12X1_6
10	844063	6	WASHER-6_4X18X2
11	853508	2	DOWEL PIN
12	859086	2	NUT-NYLOC M8
13	925012	2	WASHER-BRIDGE
14	931163	2	WHEEL - BRUSH
15	931171	2	HINGE-IDLER END
16	931172	8	KNOB-SQG
17	931235	2	LIP-FLASH GUARD
18	3130024	2	STRIP-FLASH GUARD
19	3130110	1	SEAL-BELT COVER
20	3180062	1	IDLER SUPPORT ASSLY BRUSH
21	3180217	1	DEBRIS TRAY
22	3530278	1	BRUSH DECK HOUSING
23	3530280	1	BELT COVER
24	3530283	2	PIN-BRUSH WHEEL
25	3530287	1	COUPLER COVER
26	3530288	1	BRACKET - DOUBLE ARM
27	3530290	2	DEFLECTOR ROLLER
28	3530291	1	BRACKET - SINGLE ARM
29	3530292	2	DEFLECTOR ROLLER STUD
30	3530296	2	SLEEVE DEFLECTOR ROLLER
31	3530346	1	SPACER, DOUBLE ARM
32	3530358	1	STRIP HOUSING U BEEDING
33	3530359	1	SUPPORT PLATE HOUSING
34	3530361	1	STRIP HOUSING U BEEDING
35	3530362	2	SPECIAL WASHER M5
36	3530408	3	BUSHING-FLG, .375X.50X.31 GFS-055
37	3580215	1	DEFLECTOR ROLLER ARM RH WELDMENT
38	3580216	1	DEFLECTOR ROLLER ARM LH WELDMENT
39	3580219	1	HOUSING - GEAR ASSY
40	3580257	1	HOUSING ASSY-GEAR SUPPORT

Manufacturer PDF Provided by www.southeasternequipment.net

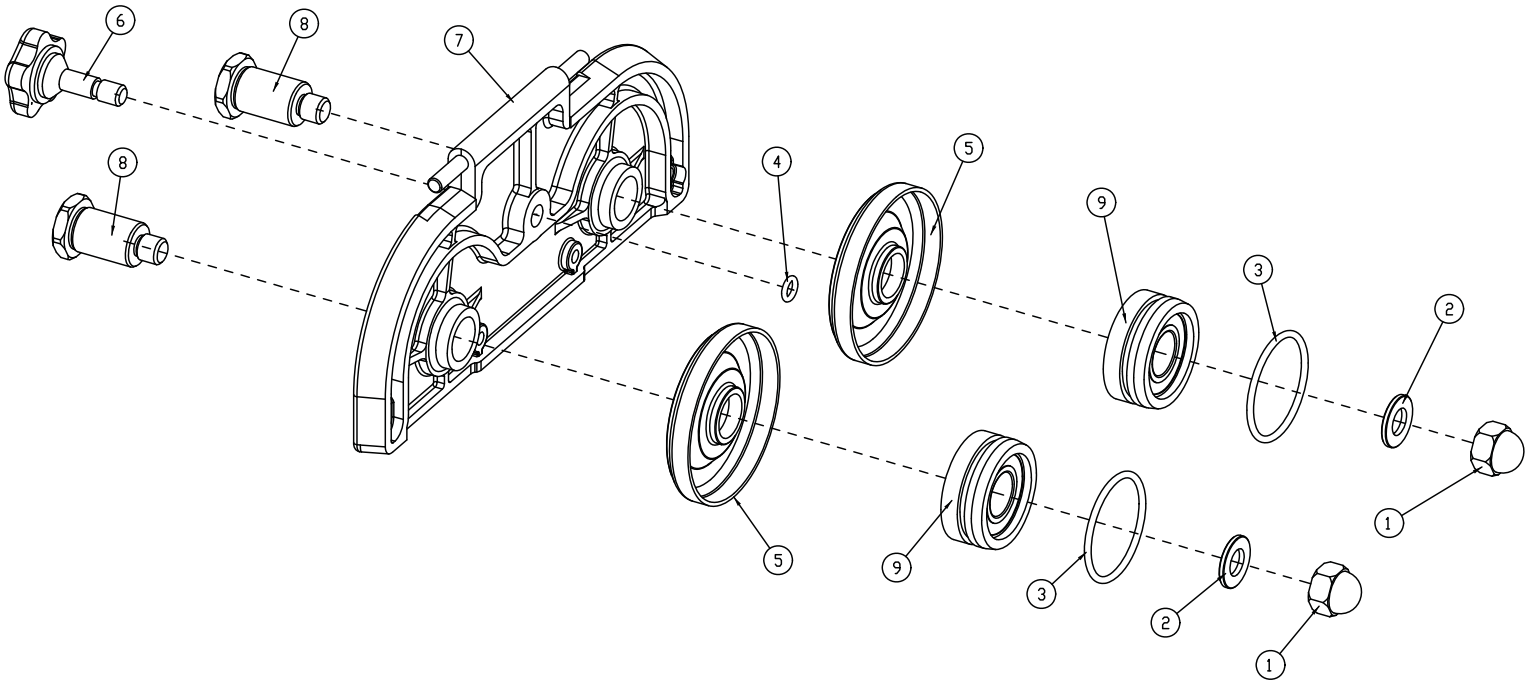

BILL OF MATERIAL - 3180062			
ITEM	**PART NO.**	**QTY**	**DESCRIPTION**
1	838100	2	DOMED CAP NUT-M10-SS
2	845101	2	WASHER-SS-304-10.5X20X2
3	854007	2	O' RING - 36X2.5
4	854008	1	ORING 6X2.0
5	931157	2	SPACER, IDLER HUB COVER
6	931758	1	KNOB-IDLER COVER LOCK
7	3130005	1	COVER IDLER END -MACHINING
8	3130042	2	PIN-IDLER END
9	3180091	2	IDLER PULLEY - BRUSH

Manufacturer PDF Provided by www.southeasternequipment.net

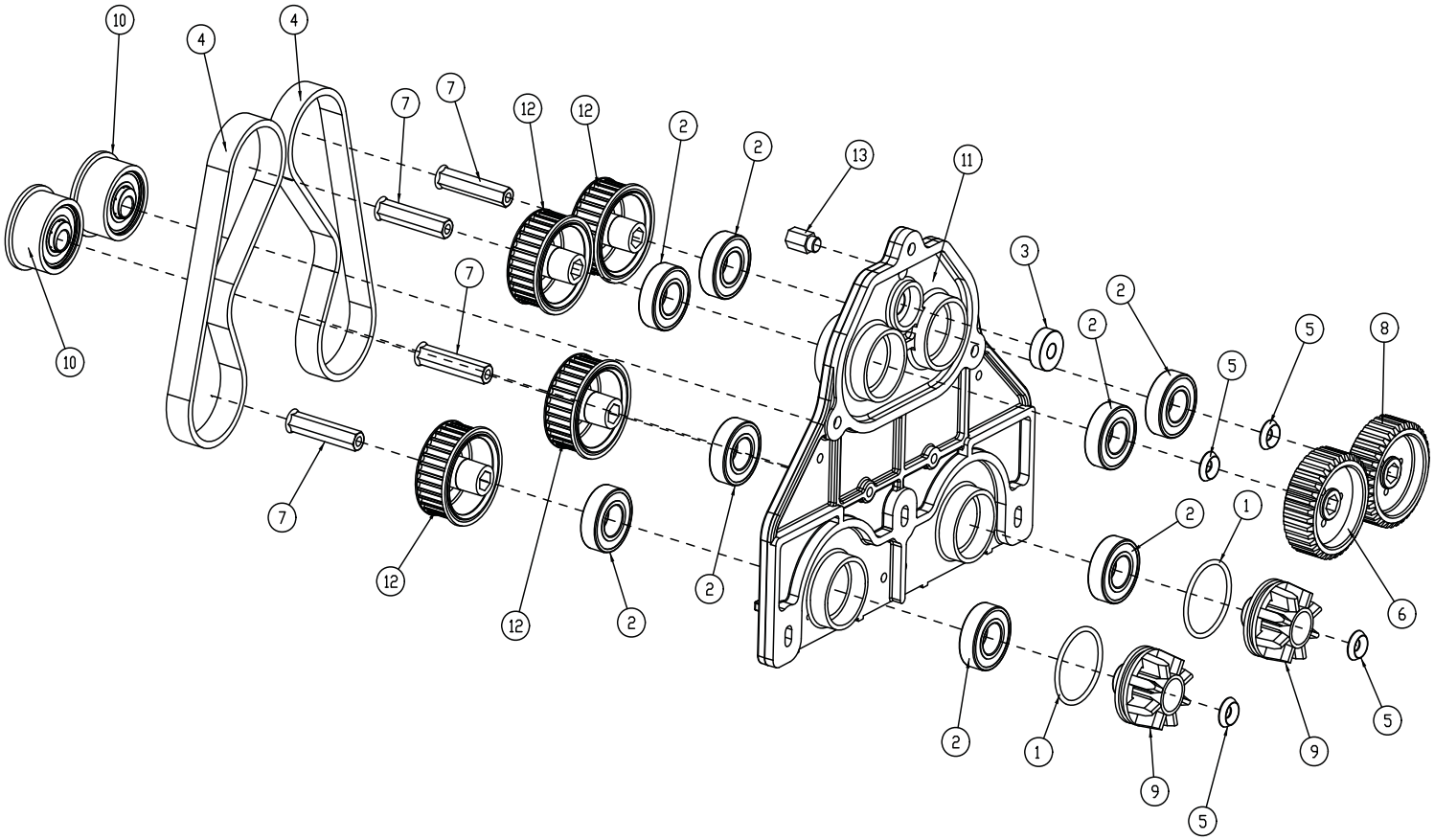

BILL OF MATERIAL - 3580257			
ITEM	**PART NO.**	**QTY**	**DESCRIPTION**
1	854007	2	O' RING - 36X2.5
2	875010	8	BEARING-6003 NSE NACHI
3	875011	1	BEARING-608 2Z
4	925002	2	DRIVE BELT 425-5M-15-HTD
5	925012	4	WASHER-BRIDGE
6	925193	1	GEAR-LH
7	931027	4	DRIVE KEY
8	931035	1	GEAR-RH
9	931129	2	PULLEY-DRIVE
10	931815	2	IDLER-PLAIN ASSY
11	3130006	1	HOUSING-GEAR SUPPORT
12	3180008	4	SPROCKET ASSEMBLY-GEAR
13	3530372	1	STUD-M/F, M8/M6 ZP

Manufacturer PDF Provided by www.southeasternequipment.net

E20 Rear Squeegee Assembly

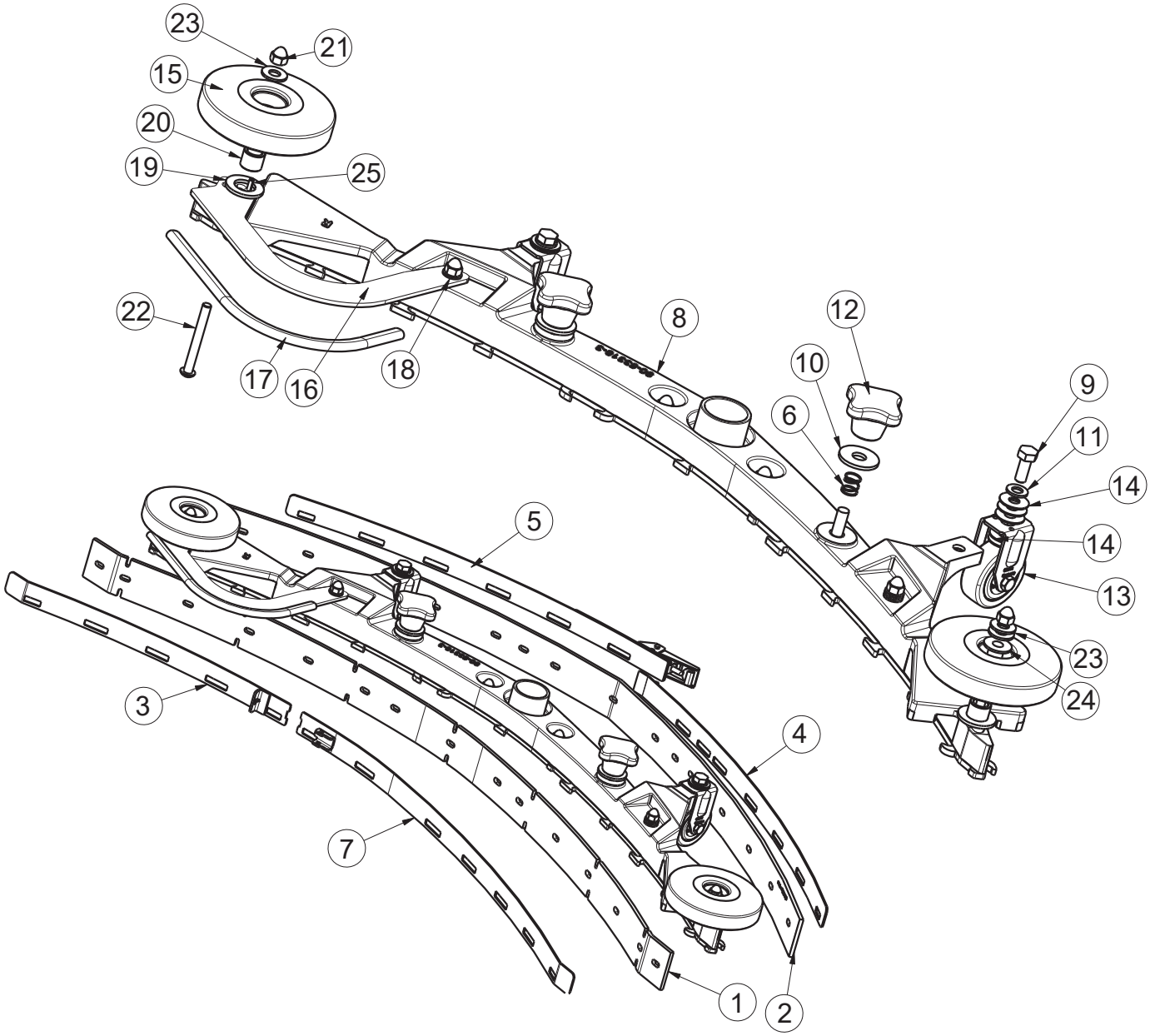

Manufacturer PDF Provided by www.southeasternequipment.net

BILL OF MATERIAL - 172534			
ITEM	PART NO.	QTY	DESCRIPTION
1	172162	1	SQUEEGEE BLADE, FRONT 34" (860) 4MM PU
2	172163	1	SQUEEGEE BLADE, REAR 34" (860), 4MM PU
3	172241	1	STRAP WMT, FRONT RT - 34" (860) SQG
4	172245	1	STRAP WMT, REAR LEFT - 34" (860) SQG
5	172246	1	WELD-STRAP REAR RT - 34" (860) SQG
6	172429	2	SPRING, COMP .4 ID X .5FL SS
7	172440	1	STRAP W/ LATCH, FRONT LEFT, 34" SQG
8	172535	1	34" SQUEEGEE BASE ASM
9	717030	2	SCR-HH M8-1.25 X 20 SS
10	717040	2	WASHER-FLAT M10.5 X 30 X 2.5 SS
11	730609	2	WASHER-FLAT M8 SS
12	17133026	2	STAR HANDLE, M10, BLACK
13	90513094	2	FIXED CASTER
14	90531112	10	WASHER-FLAT 8.3 x 22 x 1.00mm STAINLESS
15	90548397	2	ROLLER - PLASTIC, 100mm DIA. (4")
16	172271	1	BUMPER, 34" SQG
17	172274	1	EDGE TRIM, 5/16 X 10" BLACK
18	711504	5	WASHER-FLAT 1/4 SS
19	711527	2	WASHER-FLAT .63 X 1.12 X .09
20	430322	2	BUSHING-.435 X .625 X .50 ZINC
21	712591	6	NUT-ACORN 1/4-20 SS
22	712592	2	SCR-BHSCS 1/4-20 X 2.25 SS
23	712772	3	WASHER-FLAT .344 X .75 X .06 SS
24	840202	1	BUSHING-FLG .31 X .435 X .325 NYL
25	3400727	1	PIN-ROLL 1/8 X .50 ZINC

Manufacturer PDF Provided by www.southeasternequipment.net

Squeegee Mechanism Assembly

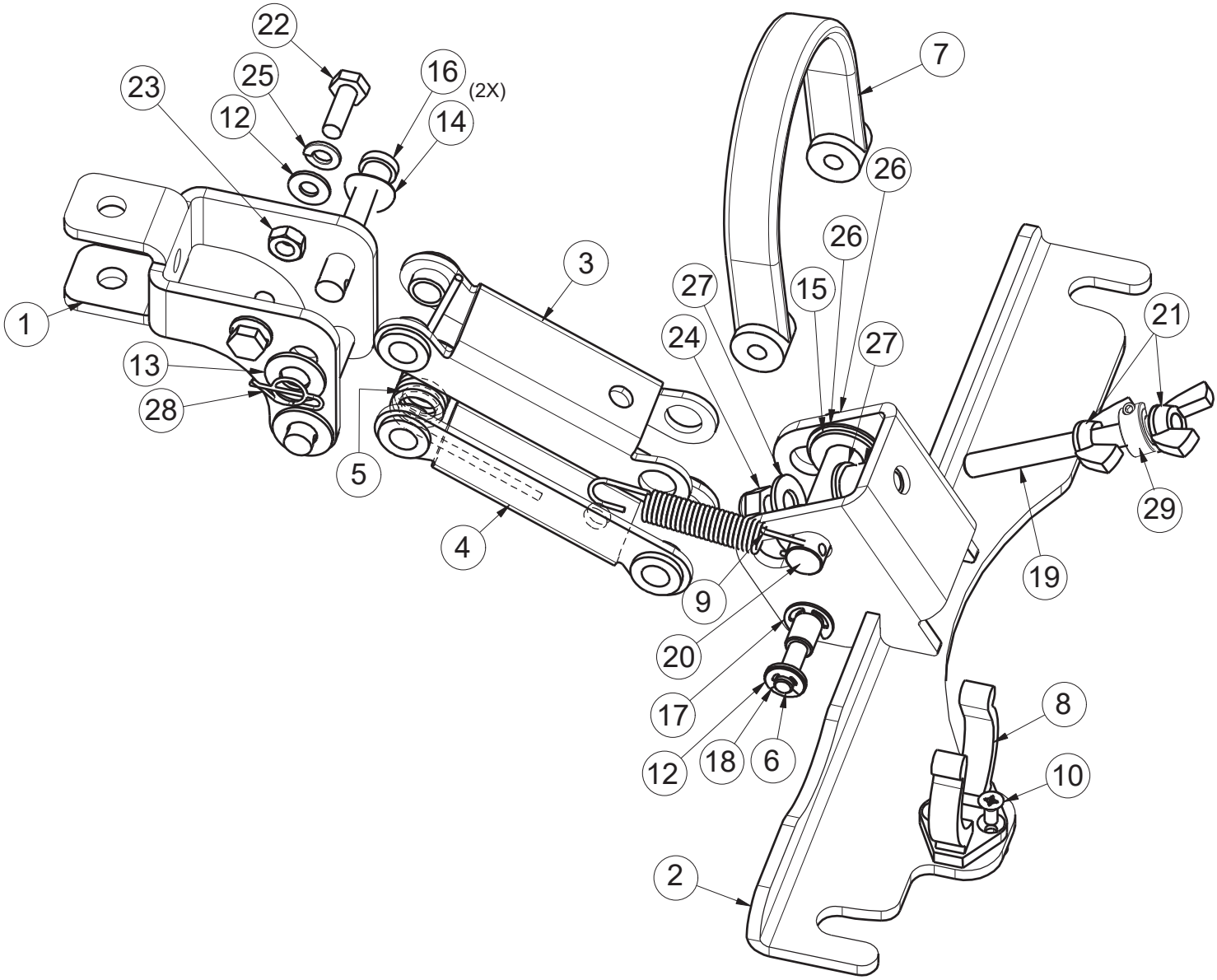

Manufacturer PDF Provided by www.southeasternequipment.net

BILL OF MATERIAL - 172150			
ITEM	PART NO.	QTY	DESCRIPTION
1	172134	1	BKT, SQG HINGE
2	172155	1	SQUEEGEE MOUNT WMT
3	172196	1	UPPER SQG LINK
4	172197	1	LOWER SQG LINK
5	172261	1	SPRING, TORSION 1720 SQG
6	172352	1	PIN, 3/8 X 3.0, SQG STRAP
7	172357	1	STRAP, 9" PU, BLACK
8	260579	1	CLIP-TOOL 1.5 INCH HOSE
9	430051	1	SPRING-RETURN .313 X .438 X 2.93 SS
10	710528	2	SCR-FHMS 8-32 X .37 BRASS
11	711420	1	NUT-JAM 5/16-18 ZP
12	711504	4	WASHER-FLAT 1/4 SS
13	712767	2	WASHER-FLAT .406 X .75 X .035 SS
14	711523	2	WASHER-WAVE .37 X .68 X .08
15	711592	2	WASHER-FLAT 1/2 X .90 X .064 NYLON
16	711678	2	PIN-CLEVIS 3/8 X 2 1/4 ZP
17	711717	2	RET RING-E EXT .37
18	711720	2	RET RING-E EXT .25
19	712147	1	ROD-THD 5/16-18 X 3.25 SS
20	712148	1	PIN-CLEVIS 1/2 X 2.25 WITH HOLE
21	712157	2	NUT-WING 5/16-18 SS
22	712562	2	SCR-HH 1/4-20 X .75, 18-8 SS
23	712665	2	NUT-HEX 1/4-20 SS
24	712683	1	NUT-NYLOC 5/16-18 SS
25	712758	2	WASHER-LOCK 1/4 SPLIT SS
26	712760	3	WASHER-FLAT .56 X 1.06 X .04 SS
27	712772	2	WASHER-FLAT .344 X .75 X .06 SS
28	3400125	1	RING-RUE 3/8
29	713528	1	COLLAR-THREADED CLAMP 5/16-18X5/16-BK OX

Manufacturer PDF Provided by www.southeasternequipment.net

1 Wiring Diagrams

PAGE LAYOUT

1	2	3

PAGES GO TOGETHER AS SHOWN TO SEE THE ENTIRE SCHEMATIC AS ONE.

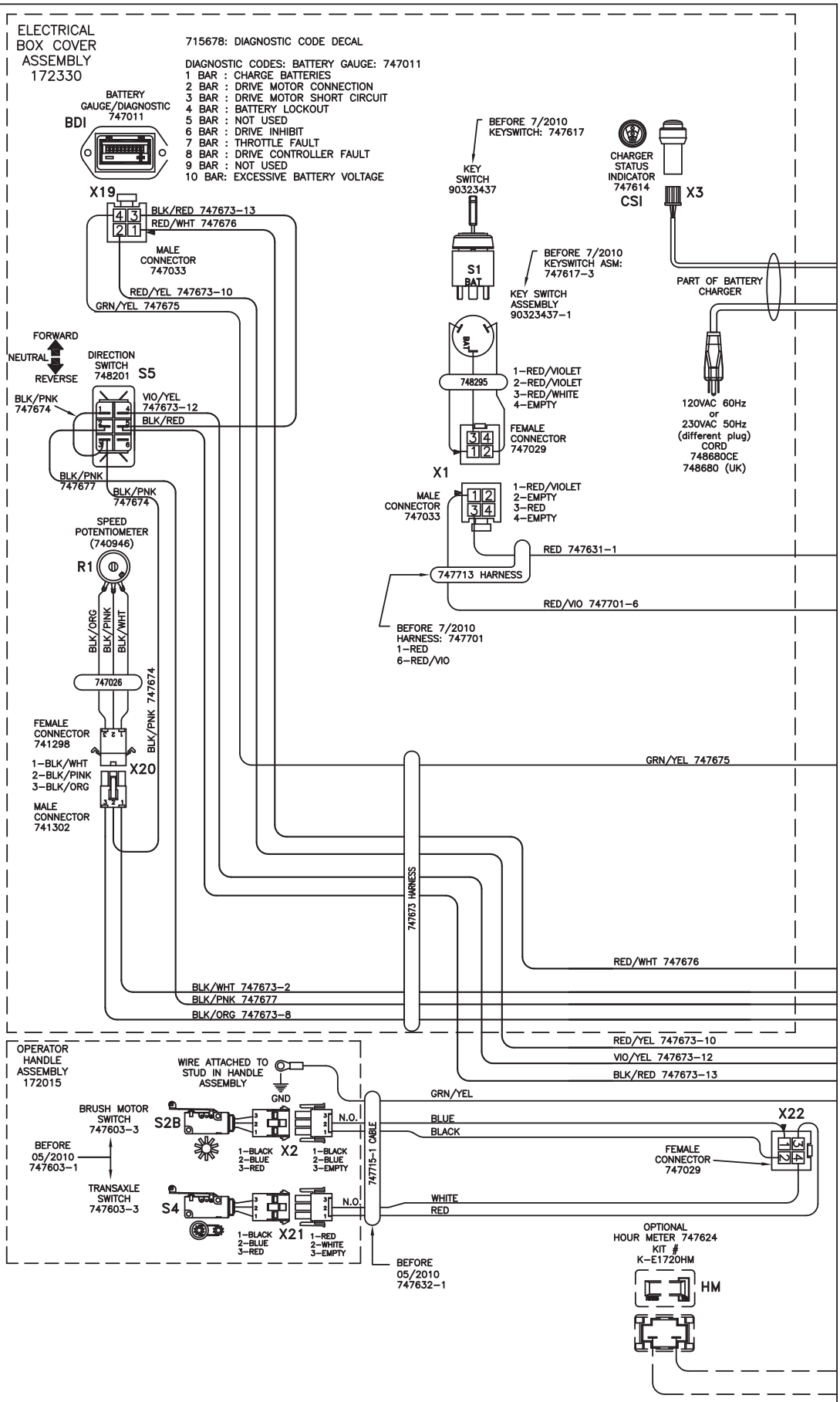

Manufacturer PDF Provided by www.southeasternequipment.net

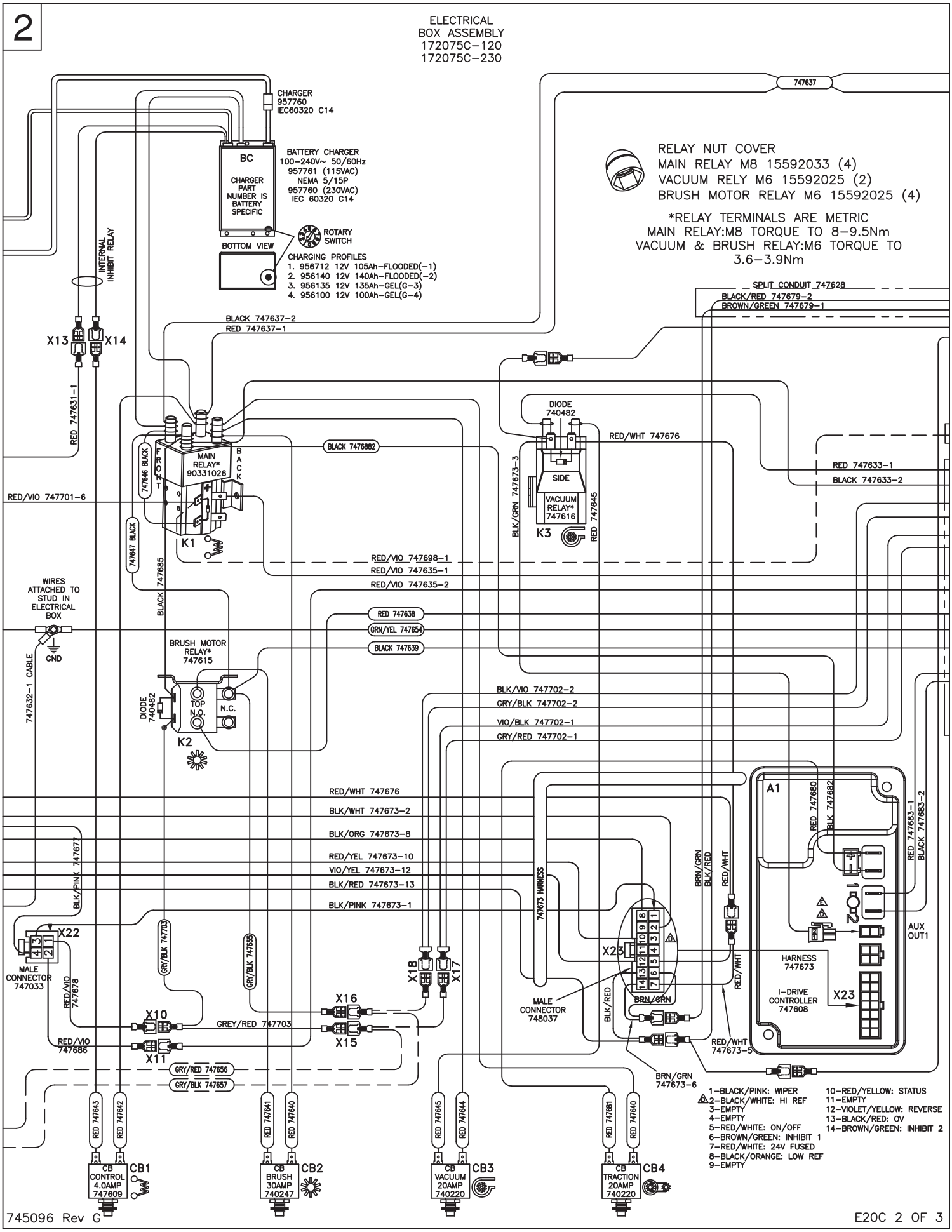

Manufacturer PDF Provided by www.southeasternequipment.net

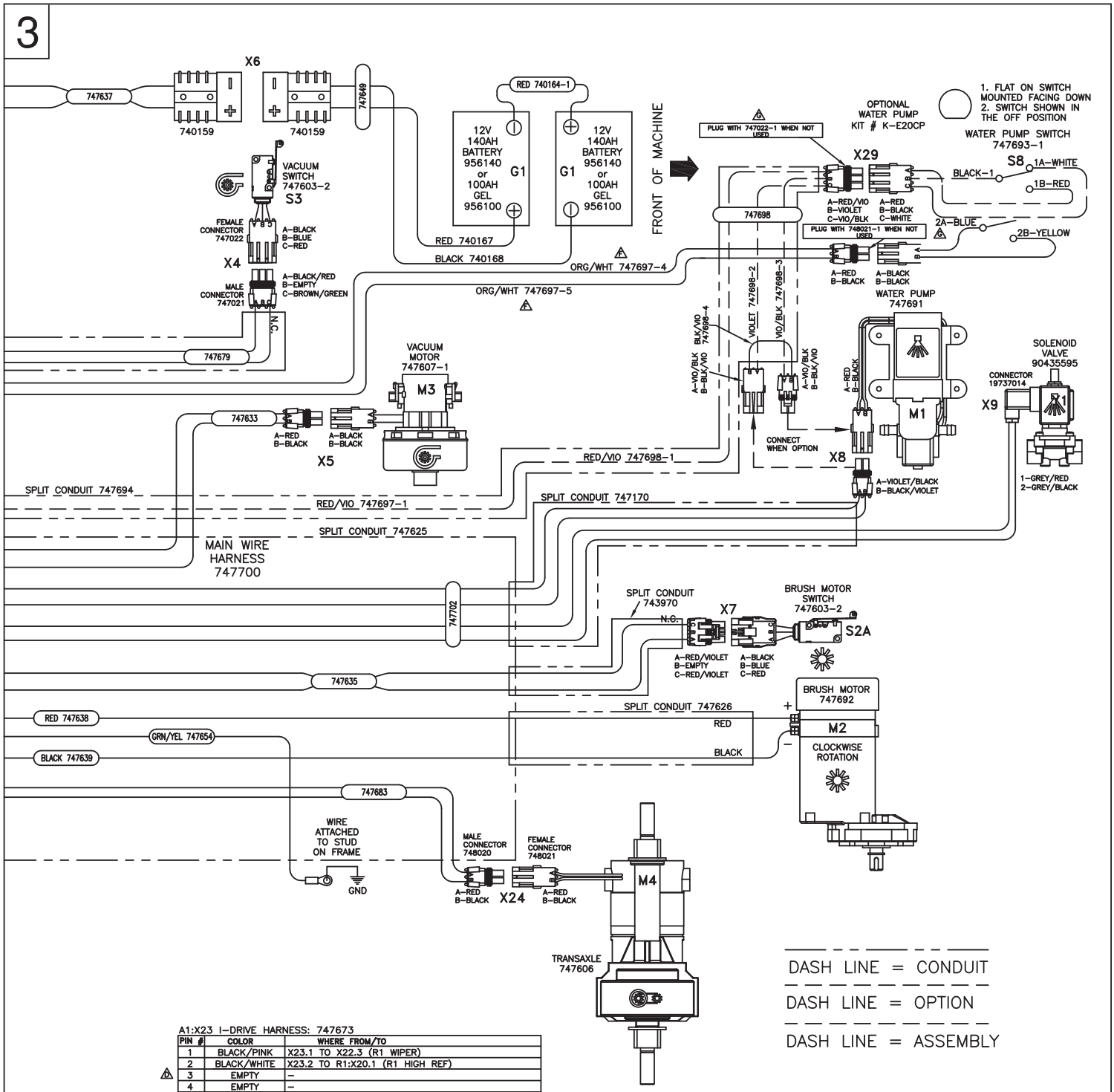

A1:X23 I-DRIVE HARNESS: 747673

PIN #	COLOR	WHERE FROM/TO
1	BLACK/PINK	X23.1 TO X22.3 (R1 WIPER)
2	BLACK/WHITE	X23.2 TO R1:X20.1 (R1 HIGH REF)
3	EMPTY	–
4	EMPTY	–
5	RED/WHITE	X23.5 JUMPER TO X23.7 (ON/OFF)
6	BROWN/GREEN	X23.6 JUMPER TO X23.14 (INHIBIT 1)
7	RED/WHITE	X23.7 JUMPER TO X23.5 (24VDC FUSED)
8	BLACK/ORANGE	X23.8 TO R1:X20.3 (R1 LOW-REF)
9	EMPTY	–
10	RED/YELLOW	X23.10 TO BDI:X19.2 (STATUS)
11	EMPTY	–
12	VIOLET/YELLOW	X23.12 TO S5.4 (REVERSE)
13	BLACK/RED	X23.13 JUMPER S5.5 JUMPER BD1:X19.3 (0V)
14	BROWN/GREEN	X23.14 JUMPER TO X23.6 (INHIBIT 2)

R1:X20 SPEED POTENTIOMETER: 747026

	COLOR	WHERE FROM/TO
1	BLACK/WHITE	X20.1 TO A1:X23.2
2	BLACK/PINK	X20.2 TO S5.3 JUMPER S5.1
3	BLACK/ORANGE	X20.3 TO A1:X23.8

X22: OPERATOR HANDLE CABLE: 747715-1

	COLOR	WHERE FROM/TO
1	BLUE	X22.1 TO S2B:X2.B
2	BLACK	X22.2
3	RED	X22.3 TO S4:X21.A
4	WHITE	X22.4 TO S4:X21.B

X22: CONNECTOR TO OPERATOR HANDLE CABLE: 747715-1

	COLOR	WHERE FROM/TO
1	RED/VIOLET	X22.1 TO X10 JUMPER K2:COIL.24VDC JUMPER X15
2	RED/VIOLET	X22.2 TO X11 TO S2A:X7.A
3	BLACK/PINK	X22.3 TO A1:X23.1
4	BLACK/PINK	X22.4 TO S5.2

S1:X1 MAIN KEYSWITCH ASSEMBLY: 90323437-1

PIN #	COLOR	WHERE FROM/TO
1	RED/VIOLET	X1.1 TO K1:COIL.24VDC
2	EMPTY	–
3	RED or RED/WHT	X1.3 TO X13 BC INTERNAL RELAY
4	EMPTY	–

BATTERY CHARGER: 957745 or 957753

	COLOR	WHERE FROM/TO
X13	RED	X13 TO S1:X1.1
X14	BLACK	X14: CB1 CONTROL 4.0A
14GA	RED	K1:CONTACT + (REAR LEFT POST)
14GA	BLACK	K1:CONTACT – (FRONT LEFT POST)

OTHER WIRE COLORS

	RED	BATTERY 24VDC: +
	BLACK	BATTERY 0VDC: –
	GREEN/YELLOW	GROUND
	RED/VIOLET	24VDC AFTER MAIN KEYSWITCH
X15	GREY/RED	OPTIONAL POWER 24VDC: 4A MAX
X16	GREY/BLACK	OPTIONAL POWER 0VDC: 4A MAX
X8:A	VIOLET/BLACK	WATER PUMP: 24VDC
X8:B	BLACK/VIOLET	WATER PUMP: 0VDC
X9:A	VIOLET/BLACK	WATER SOLENOID VALVE: 24VDC
X9:B	BLACK/VIOLET	WATER SOLENOID VALVE: 0VDC

Manufacturer PDF Provided by www.southeasternequipment.net

E20C PART REFERENCE LIST

Schematic 745096

REFERENCE #	COMPONENT NAME	PART NUMBER
M1	PUMP, WATER	748691
M2	MOTOR, BRUSH	748692
M3	MOTOR, VACUUM ASSEMBLY	747607-1
M4	TRANSAXLE	747606
Y1	SOLENOID VALVE, WATER	90435595
K1	RELAY, MAIN	90331026
K2	RELAY, BRUSH MOTOR	747615
K3	RELAY, VACUUM	747616
CB1	CIRCUIT BREAKER 4.0A, CONTROL	747609
CB2	CIRCUIT BREAKER 30A, BRUSH MOTOR	740247
CB3	CIRCUIT BREAKER 20A, VACUUM MOTOR	740220
CB4	CIRCUIT BREAKER 20A, TRANSAXLE	740220
S1	KEYSWITCH	747617
S2A	SWITCH, BRUSH MOTOR (at motor)	747603-2
S2B	SWITCH, BRUSH MOTOR (handle)	748603-1
S3	SWITCH, VACUUM MOTOR	748603-2
S4	SWITCH, TRANSAXLE (handle)	748603-1
S5	SWITCH, DIRECTION	748201
S8 (optional)	SWITCH, PUMP- OFF AISLE WAND (KIT K-E20CP)	747693-1
A1	CONTROLLER, I-DRIVE	747608
R1	SPEED POTENTIOMETER ASSEMBLY	747026
BDI	BATTERY DISCHARGE INDICATOR	747011
CSI	CHARGER STATUS INDICATOR	747614
HM (optional)	HOUR METER (KIT K-E1720HM)	747624
BC (model specific)	BATTERY CHARGER 115VAC (battery type specific)	957761 (-2 or G-4)
BC (model specific)	BATTERY CHARGER 230VAC (battery type specific)	957760 (-2 or G-4)
G1	BATTERY, 12V 140AH (2 REQUIRED)	956140
G1 (optional)	BATTERY, GEL 12V 100AH (2 REQUIRED)	956100
D1	DIODE, MAIN RELAY	Part of K1
D2	DIODE ASM, BRUSH MOTOR RELAY	740482
D3	DIODE ASM, VACUUM MOTOR RELAY	740482

REFERENCE #	CONNECTOR FUNCTION	PART # -female	PART # -male
X1	KEYSWITCH (S1)	744012	748037
X2	SWITCH, BRUSH MOTOR (S2B)	747022	747021
X3	CHARGER STATUS INDICATOR (CSI)	Part of CSI	Part of BC
X4	SWITCH, VACUUM (S3)	747022	747021
X5	MOTOR, VACUUM (M3)	748021	748020
X6	BATTERY CONNECTOR	740159	740159
X7	SWITCH, BRUSH MOTOR (S2A)	747022	747021
X8	PUMP, WATER (M1)	748021	748020
X9	SOLENOID VALVE, WATER (Y1)	19737014	N/A
X10	OPERATOR HANDLE CABLE	741093	740697
X11	OPERATOR HANDLE CABLE	740366	740697
X13	BATTERY CHARGER (BC)- INTERNAL RELAY	740366	740697
X14	BATTERY CHARGER (BC)-INTERNAL RELAY	740366	740697
X15	SOLENOID (Y1) /HOUR METER CONNECTION (HM)	740366	741165
X16	SOLENOID (Y1) /HOUR METER CONNECTION (HM)	740366	741165
X17 (optional)	OPTIONAL HOUR METER (HM) WIRE-747656	740366	741165
X18 (optional)	OPTIONAL HOUR METER (HM) WIRE-747657	740366	741165
X19	BATTERY GAUGE (BDI)	Part of BDI	747033
X20	SPEED POT ASSEMBLY (R1)	741298	741302
X21	SWITCH, TRANSAXLE (S4)	747022	747021
X22	OPERATOR HANDLE CABLE: 747632-1	747029	747033
X23	I-DRIVE HARNESS: 747673	Part of A1	748037
X24	TRANSAXLE (M4)	748021	748020
X25	I-DRIVE (A1) TO VACUUM SWITCH (S3)	740366-1	741165
X26	I-DRIVE (A1) TO VACUUM SWITCH (S3)	741093	740698
X27	I-DRIVE (A1) TO VACUUM RELAY-CONTACT	741093	741165
X28 (optional)	SWITCH, TOGGLE WATER PUMP (S8)	747022	747021
X29 (optional)	PUMP, OFF AISLE WAND (M1)	748021	748020

Last Updated 01/05/10

Manufacturer PDF Provided by www.southeasternequipment.net

Minuteman®
Excellence Meets Clean

Minuteman International Made Simple Commercial Limited Warranty

REVISION O
EFFECTIVE 4/1/2016

Minuteman International, Inc. warrants to the original purchaser/user that the product is free from defects in workmanship and materials under normal use. Minuteman will, at its option, repair or replace without charge, parts that fail under normal use and service when operated and maintained in accordance with the applicable operation and instruction manuals. All warranty claims must be submitted through and approved by factory authorized repair stations.

This warranty does not apply to normal wear, or to items whose life is dependent on their use and care, such as belts, cords, switches, hoses, rubber parts, electrical motor components or adjustments. Parts manufactured by Minuteman are covered by and subject to the warranties and/or guarantees of their manufacturers. Please contact Minuteman for procedures in warranty claims against these manufacturers.

Special warning to purchaser -- Use of replacement filters and/or pre-filters not manufactured by Minuteman or its designated licensees, will void all warranties expressed or implied. A potential health hazard exists without original equipment replacement.

All warranted items become the sole property of Minuteman or its original manufacturer, whichever the case may be.

Minuteman disclaims any implied warranty, including the warranty of merchantability and the warranty of fitness for a particular purpose. Minuteman assumes no responsibility for any special, incidental or consequential damages.

This limited warranty is applicable only in the U.S.A. and Canada, and is extended only to the original user/purchaser of this product. Customers outside the U.S.A. and Canada should contact their local distributor for export warranty policies. Minuteman is not responsible for costs or repairs performed by persons other than those specifically authorized by Minuteman. This warranty does not apply to damage from transportation, alterations by unauthorized persons, misuse or abuse of the equipment, use of non-compatible chemicals, or damage to property, or loss of income due to malfunctions of the product.

If a difficulty develops with this machine, you should contact the dealer from whom it was purchased.

This warranty gives you specific legal rights, and you may have other rights which vary from state to state. Some states do not allow the exclusion or limitation of special, incidental or consequential damages, or limitations on how long an implied warranty lasts, so the above exclusions and limitations may not apply to you.

14N845 U.S. Route 20, Pingree Grove, IL 60140 USA
Phone (800) 323-9420 - www.minutemanintl.com
A Member of the Hako Group

Manufacturer PDF Provided by www.southeasternequipment.net

Minuteman®
Excellence Meets Clean

Model	Parts	Labor	Poly	Travel**
Cord Electric Group	5yrs	3yrs	12yrs	90 days
Battery Operated Group	5yrs	3yrs	12yrs	90 days

Exceptions…….

Model	Parts	Labor	Poly	Travel**
Port A Scrub, all models	1yr	6months	12yrs	90 days
A3S Blower	1yr	1yr	0	0
Phenom Dual Motor Upright Vacuums	2yrs	2yrs	0	0
Explosion Proof Vacuum	1yr	1yr	0	0
Propane Burnisher	1yr	1yr	0	90 days
				**Travel, 2 hours max

Stand-alone Battery Chargers:	One year
Replacement Parts:	Ninety days
Batteries:	0-3 months full replacement, 4-12 months pro-rate
Polypropylene Plastic Tanks:	12yr warranty, no additional labor

14N845 U.S. Route 20, Pingree Grove, IL 60140 USA
Phone (800) 323-9420 - www.minutemanintl.com
A Member of the Hako Group

Manufacturer PDF Provided by www.southeasternequipment.net

Minuteman®
Excellence Meets Clean

"Excellence Meets Clean"

Minuteman is a Full Line Manufacturer of Sweepers and Scrubbers, for Industrial Facilities.

14N845 U.S. Route 20, Pingree Grove, IL 60140 USA
Phone (800) 323-9420 - www.minutemanintl.com
A Member of the Hako Group