1. SCOPE

The fasteners described in this standard are both hardened and unhardened Metric Clevis Pins.

2. GENERAL

2.1 This standard conforms essentially with ISO 2341 and ASME B18.8.8M. These clevis pins are intended for use in conjunction with clevises, rod end eyes and other general applications. The inclusion of dimensional data in this standard is not intended to imply that all the products described are stock production sizes.

2.2 Thee tables of parts are listed consisting of unhardened pins with zinc (ZND) finish, hardened pins with zinc (ZND) finish and a table with miscellaneous sizes and finishes.

3. RELATED DOCUMENTS

3.1 RELATED STANDARDS

CNH STPA020—Fasteners Finishes and Material Specifications
CNH STPA110—Fasteners Finishes and Design Considerations
CNH ENPA110—Preferred Parts
CNH MAT0310—Zinc Plating
ISO 2341—Clevis Pins with Head
ASME B18.8.8M—Headed Clevis Pins (Metric Series)
Fiat 13106/03—Tie Rod End Clevis Joint Pins

3.2 REPLACED STANDARDS

JM-015 (Case)—Clevis Pins (General Specifications)
JM-016 (Case)—Clevis Pins - Preferred
JM-017 (Case)—Clevis Pins – Non-Preferred
FNHA-1-A-690.00 (NH)—Clevis Pin

4. CROSS REFERENCE

For cross reference listing of company part numbers, go to PARTsolutions.

THE INFORMATION HEREON IS THE CONFIDENTIAL AND PROPRIETARY PROPERTY OF CNH INDUSTRIAL AND/OR ITS SUBSIDIARIES OR DIVISIONS. ANY USE, EXCEPT THAT FOR WHICH IT MAY BE LOANED, IS PROHIBITED.

UNCONTROLLED COPY When Printed

5. MATERIAL AND FINISH

Material and finish shall conform to STPA020. Unhardened clevis pins shall be made from carbon steel (CST) having a hardness of 125-245 HV or 69-99 HRB. Hardened clevis pins (HTS) may be carburized or carbonitrided as follows:

Carburize per MAT4030
Temper to a surface hardness of 600-700 HV or 88-90 HR15n
Effective case depth: .25 - .40 measured to 550 HV or to 87 HR15N

Carbonitride per MAT4020
Temper to a file hard surface per SAE J864, File #58
Total Case Depth .05 -.15

Clevis pins shall be furnished plain (PLN), plated or coated in accordance with STPA020 and CNH Engineering Material Specifications.

6. HEAD

The top of the head shall be flat and either chamfered or rounded at the outer periphery.

7. BEARING SURFACE

The bearing surface of the head shall be flat and square with the axis of pin (determined over a distance from under the head equivalent to 1.5 times the basic pin diameter) within 2 degrees.

8. ECCENTRICITY

The head of the pin shall not be eccentric with the axis of the shank of pin by an amount equal to more than 6% of the maximum head diameter or 0.25 mm whichever is greater. Eccentricity is defined as being one half the full indicator movements (FIM).

9. HOLE ALIGNMENT AND ANGULARITY

The axis of the hole shall be within the positional tolerance specified in Table A with respect to the pin shank axis: Additionally, the hole shall be square with the axis of pin within 2º.

Table A: Hole to Shank Position Tolerance

Nominal Shank Diameter		Hole to Shank Position Tolerance
Over	Thru	At MMC (Max Width)
----	3 mm	0.28 mm
3 mm	6 mm	0.36 mm
6 mm	10 mm	0.44 mm
10 mm	18 mm	0.54 mm
18 mm	30 mm	0.66 mm
30 mm	50 mm	0.78 mm

THE INFORMATION HEREON IS THE CONFIDENTIAL AND PROPRIETARY PROPERTY OF CNH INDUSTRIAL N.V. AND/OR ITS SUBSIDIARIES OR DIVISIONS. ANY USE, EXCEPT THAT FOR WHICH IT MAY BE LOANED, IS PROHIBITED.

UNCONTROLLED COPY When Printed

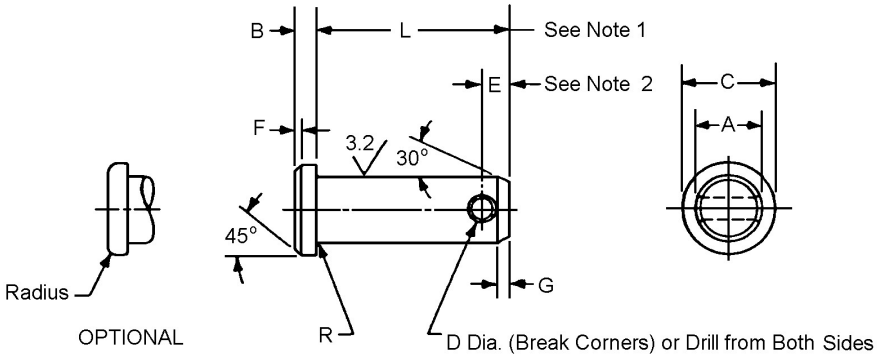

Figure: Clevis Pins Metric

Table B: Basic Dimensions of Clevis Pins Metric

Nom Size/ Basic Pin Dia.	A		B		C		D		E	F	G	R
	Shank Dia.		Head Height		Head Dia.		Hole Dia.		End To Ctr.	Head Chamfer	Point Length	Radius
	Max.	Min.	Max.	Min.	Max.	Min.	Max.	Min.	Min.	Max.	Max.	Max.
4	4.00	3.92	1.15	.85	6.00	5.64	1.14	1.00	2.2	0.5	1	0.6
5	5.00	4.92	1.75	1.45	8.00	7.70	1.34	1.20	2.9	1	2	0.6
6	6.00	5.92	2.18	1.82	10.00	9.64	1.74	1.60	3.2	1	2	0.6
8	8.00	7.91	3.18	2.82	14.00	13.64	2.14	2.00	3.5	1	2	0.6
10	10.00	9.91	4.22	3.79	18.00	17.57	3.38	3.20	4.5	1	2	0.6
12	12.00	11.89	4.22	3.79	20.00	19.57	3.38	3.20	5.5	1.6	3	0.6
14	14.00	13.89	4.22	3.79	22.00	21.48	4.18	4.00	6	1.6	3	0.6
16	16.00	15.89	4.72	4.29	25.00	24.57	4.18	4.00	6	1.6	3	0.6
18	18.00	17.90	5.2	4.8	28.00	27.48	5.18	5.00	7	1.5	3	1
20	20.00	19.87	5.26	4.74	30.00	29.48	5.18	5.00	8	2	4	1
22	22.00	21.87	5.7	5.3	33.00	32.38	5.18	5.00	8	2	4	1
24	24.00	23.87	6.26	5.74	36.00	35.48	6.52	6.30	9	2	4	1
30	30.00	29.87	8.31	7.69	44.00	43.38	8.22	8.00	10	2	4	1
36	36.00	35.84	8.31	7.69	50.00	49.38	8.22	8.00	10	2	4	1
40	40.00	39.84	8.31	7.69	55.00	54.26	8.22	8.00	10	2	4	1

Note 1: See part number pages for tabulated lengths.

Note 2: Basic "E" dimensions (distance from center line of hole to end of pin) is specified for calculating hole location from underside of head on pins of lengths not tabulated.

Note 3: All tolerances shall apply prior to the application of a plating or coating. Parts shall be uniform in quality and free of irregularities or detrimental effects. No burrs shall appear on any part of the pin.

THE INFORMATION HEREON IS THE CONFIDENTIAL AND PROPRIETARY PROPERTY OF CNH INDUSTRIAL N.V. AND/OR ITS SUBSIDIARIES OR DIVISIONS. ANY USE, EXCEPT THAT FOR WHICH IT MAY BE LOANED, IS PROHIBITED.

UNCONTROLLED COPY When Printed

Table 1: Unhardened Clevis Pins ZND Finish

See Table B: Basic Dimensions of Clevis Pins Metric for details

	Nominal Diameter							
Length	**5**	**6**	**8**	**10**	**12**	**16**	**20**	**24**
12								
16	48163717	412317						
20		84019930	385818	321637				
22			374834					
25				358885		47636566		
28			335040					
30		376876			412209	380840	84363635	
35	47445360	47985372	412414	390040	355518		84363636	
40			47859754	9507095	321018	48052726		
45			353216	345785	412027	390071	383965	
50			398200			9503184	412131	84515051
55			385983	336793	383420	362528		
60			394055	379547	84018348			84499094
65				51670817	412118	322441		
70								
75						334198	350306	
80						412073	47685319	
85								
90							47396827	
95					387792			
100			90505475			84078725		
110				86605625	412046	47931819	412069	
135								
150								
185			47551549					

THE INFORMATION HEREON IS THE CONFIDENTIAL AND PROPRIETARY PROPERTY OF CNH INDUSTRIAL N.V. AND/OR ITS SUBSIDIARIES OR DIVISIONS. ANY USE, EXCEPT THAT FOR WHICH IT MAY BE LOANED, IS PROHIBITED.

UNCONTROLLED COPY When Printed

Table 2: Hardened Clevis Pins ZND Finish

See Table B: Basic Dimensions of Clevis Pins Metric for details

	Nominal Diameter						
Length	**6**	**8**	**10**	**12**	**16**	**20**	**24**
12							
16							
20	86639105						
22		10050811	48106469				
25		86639013					
28							
30		87016663					
35		10041211					
40		86639106		86639102			
45							
50			86597862	84056380			
55							
60		86639107			9850761	84452094	
65				87597958			
70				87035064			
75			87668381	87301316	92683366		
80			9602968	87017599			
85			86599794				
90			84529307	86639103	86597861		84039008
95			87661862				
100					86639104		
110							
120				87560329	51513669		51623173
130			87695416		51513671		
135				91850428	51508738		86984254
140							92170353
150			86605626	47485728			
160				91850429			84294531
170		47508262					
180							
190							90478483

THE INFORMATION HEREON IS THE CONFIDENTIAL AND PROPRIETARY PROPERTY OF CNH INDUSTRIAL N.V. AND/OR ITS SUBSIDIARIES OR DIVISIONS. ANY USE, EXCEPT THAT FOR WHICH IT MAY BE LOANED, IS PROHIBITED.

UNCONTROLLED COPY When Printed

Table 3: Clevis Pins – Miscellaneous Sizes and Finishes

See Table B: Basic Dimensions of Clevis Pins Metric for unspecified details

Hole Dia.	End to Ctr	Diameter	Length	Material	Finish	Part No.
1.5	2.7	*4	12	HTS	ZND	10033111
1.6		6	10	CST	PLN	84470497
1.6		6	12	CST	PLN	84405134
		6	16	HTS	PHC	87035494
2	3	*6	17	HTS	ZND	10004911
2	3	*6	17	HTS	DAC	10004914
		6	20	HTS	DOR	87344038
1.85	6	6	20	HTS	ZND	83963082
		6	20	HTS	DAC	90499690
		6	23	CST	ZND	467823
		6	35	CST	PLN	47985371
		8	20	HTS	PLN	86639014
		8	20	CST	PLN	86640069
2	3	*8	22	HTS	DAC	10050814
		8	25	CST	PLN	86640070
2	3	*8	28	HTS	DAC	10041014
2	3	*8	32	CST	PLN	10041170
		8	35	HTS	PHC	87312716
		8	40	HTS	DOR	87344040
		8	45	HTS	PHC	86639111
		8	60	HTS	DOR	87344039
		10	20	CST	PLN	87752082
		10	22	HTS	DAC	47832240
		10	25	CST	PLN	51410828
3.2	3.5	*10	27	HTS	DAC	10033414
3.2	3.5	*10	27	HTS	PLN	10033410
3.2	3.5	*10	27	HTS	ZND	10033411
		10	28	HTS	PHC	47641228
		10	30	HTS	PHC	86639108
		10	35	HTS	PHC	86639110
		10	40	CST	PLN	86639012
		10	90	CST	PLN	86640071
		10	130	HTS	DAC	91751887
3.2	4.5	10	195	CST	ZND	84329846
3.2	4.5	10	225	CST	ZND	84329842
		10	275	HTS	ZND	47737990
		10	275	CST	ZND	47748283
		10	300	HTS	ZND	47727170
		12	25	HTS	PLN	86639015
3.0	4.5	*12	32	HTS	ZND	10033511
3.2	4	*12	33	HTS	PLN	10005010
3.2	4	*12	33	HTS	ZND	10005011

* Refer to Fiat Standard 13106/03 for dimensional details which list different head diameter, hole diameter and end to center dimensions from those listed in ISO 2341.

THE INFORMATION HEREON IS THE CONFIDENTIAL AND PROPRIETARY PROPERTY OF CNH INDUSTRIAL N.V. AND/OR ITS SUBSIDIARIES OR DIVISIONS. ANY USE, EXCEPT THAT FOR WHICH IT MAY BE LOANED, IS PROHIBITED.

UNCONTROLLED COPY When Printed

Table 3: Clevis Pins – Miscellaneous Sizes and Finishes (cont'd)
See Table B: Basic Dimensions of Clevis Pins Metric for unspecified details

Hole Dia.	End to Ctr	Diameter	Length	Material	Finish	Part No.
		12	40	HTS	PLN	86639016
		12	50	HTS	DAC	92240224
		12	90	HTS	DAC	90467412
		12	90	HTS	DOR	87344037
		12	110	HTS	DOR	92036571
		12	310	HTS	ZND	91850430
		12	320	HTS	ZND	91850431
		18	70	HTS	ZND	87553852
		18	90	HTS	ZND	48167252
		22	70	HTS	ZND	87553854
		22	106	HTS	ZND	84151585
		22	120	HTS	ZND	87553855
		24	145	HTS	ZND	92281487
		30	50	CST	ZND	84515052
		30	65	CST	ZND	84499095
		30	100	HTS	ZND	51652725
		30	145	HTS	ZND	92646054

* Refer to Fiat Standard 13106/03 for dimensional details which list different head diameter, hole diameter and end to center dimensions from those listed in ISO 2341.

THE INFORMATION HEREON IS THE CONFIDENTIAL AND PROPRIETARY PROPERTY OF CNH INDUSTRIAL N.V. AND/OR ITS SUBSIDIARIES OR DIVISIONS. ANY USE, EXCEPT THAT FOR WHICH IT MAY BE LOANED, IS PROHIBITED.

UNCONTROLLED COPY When Printed