Manufacturer PDF Provided by www.southeasternequipment.net

Minuteman®
Excellence Meets Clean

User Manual

E17/E20/H20 Walk-Behind Scrubber
Disc Brush Drive

Manufacturer PDF Provided by www.southeasternequipment.net

This manual is furnished with each new ***MINUTEMAN E17/E20/H20***. This provides the necessary operating and preventive maintenance instructions. Operators must read and understand this manual before operating or servicing this machine.

This machine was designed to give you excellent performance and efficiency. For best results and minimal cost, please follow the general guidelines below:

- Operate the machine with reasonable care.
- Follow the manufacturer's suggested maintenance instructions as provided in this booklet.
- Use original Minuteman supplied parts.

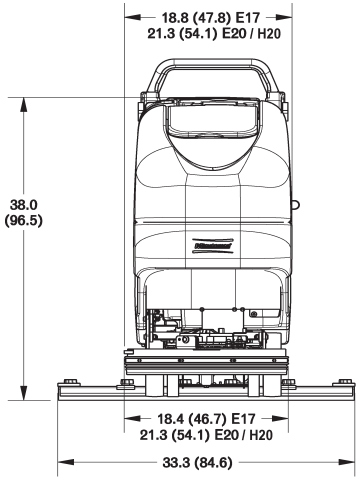

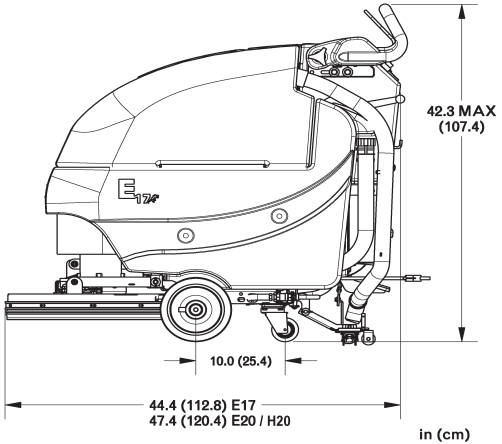

Manufacturer PDF Provided by www.southeasternequipment.net

Model ***E17/E20/H20***

All Models Beginning with: E17BD / E20BD / H20BD

Battery Options				
Part Number	Type	Mfg'r	Capacity	
			Ah	@ hrs
956712	Lead Acid	Crown	115	20
956100	Sealed	Crown	95	20
956754	Lead Acid	Trojan	105	20

	E17BD	E20BD / H20BD
Current (Max)	32 amps	32 amps
Sound Level	69 dBA	69 dBA / 65.5 dBA
Cleaning path width	17 in (43 cm)	20 in (51 cm)
Squeegee width	30 in (76 cm)	34 in (86 cm)
Theoretical productivity	17,000 ft^2 /hr (1,579 m^2)	20,000 ft^2 /hr (1,858 m^2)
Working speed	2.3 mph (3.7 km/hr)	2.3 mph (3.7 km/hr)
Rated voltage	24 volts	24 volts
Vacuum flow	65 cfm (110 m^3/hr)	65 cfm (110 m3/hr)
Vacuum waterlift	45 inches (112mbar)	45 inches (112mbar) / 46 inches (115mbar)
Vacuum power	.60 HP (450 W)	.60 HP (450 W)
Brush type	Disc	Disc
Brush motor(s) power	3/4 HP (560W)	3/4 HP (560W)
Number of brushes	1	1
Brush RPM	180 RPM	180 RPM
Aqua-Stop equipped	Available	Available
Solution capacity	12Gal (45 liters)	12 Gal (45 liters)
Recovery capacity	13 Gal (49 liters)	13 Gal (49 liters)
Working Grade	2%	2%
Weight with batteries	306 lbs (139 kg)	313 lbs (142 kg)
Weight without batteries	196 lbs (89 kg)	203lbs (92 kg)
Dimensions (LxWxH)	44.4 x 18.8 x 42.3 (112.8 x 47.8 x 107.4 cm)	47.4 x 21.3 x 42.3 (120.4 x 54.1 107.4 cm)

Manufacturer PDF Provided by www.southeasternequipment.net

CE

DECLARATION OF CONFORMITY

MANUFACTURER'S NAME: **Minuteman International Inc.**

MANUFACTURER'S ADDRESS: **111 South Rohlwing Road**
Addison, IL. 60101

EQUIPMENT DESCRIPTION: **E17/ E20 Walk-Behind Scrubber**

EQUIPMENT MODEL DESIGNATION: **E17BDQPCE, E17BDQPGCE, E17BDCE, E20BDCE, E20BDQPCE, E20BDQPGCE**

Application of Council Directives: 98/37/EC, 89/336/EEC

Harmonized standards complied with: EN 60335-2-72, EN 60335-1, EN 61000-6-2, EN 61000-6-3

I, the undersigned, hereby declare that the equipment specified above conforms to the above Directive(s) and Standard(s).

SIGNATURE: _____ **DATE:** 9.11.2007

PRINTED NAME: **Ruediger Schroeder**
TITLE: **Exec. VP and COO**

Form: ECO 200 *

Manufacturer PDF Provided by www.southeasternequipment.net

Technical Specifications 3
CE Declaration 4
Safety Instructions 6
IMPORTANT SAFETY INSTRUCTIONS 6
For Safety During Operation 6
For Safety when Servicing or Maintaining Machine 6
Inspection 7
Electrical 7
Batteries 7
Operator Responsibility 7
Unpacking Instructions 7
Machine Overview 8
Machine Overview - Front 8
Machine Overview - Rear 9
Control Panel 10
Bail Handle 11
Handle Adjustment Knobs 11
Key Switch 11
Squeegee Lift Lever 11
Solution Control Lever 11
Battery Gauge 11
Charge Status Indicator 11
Optional Hour Meter 12
Battery Compartment 13
Circuit Breakers 13
Rear Squeegee 14
Cleaning the Squeegee 14
Changing the Squeegee Blades 14
Adjusting the Squeegee Blades 15
Angle Adjustment 15
Height Adjustment 16
Handle Adjustment 17
Angle Adjustment 17
Horizontal Adjustment 18
Aqua-Saver Solution Control 19
Solution Tank Drain Hose 20
Solution Level Indicator 20
Solution Fill Filter 21
Screened Float 22
Screened Float Removal 23
Recovery Tank Drain Hose 24
Deck Skirt Removal 24
Optional Solution Solenoid 25
In-Line Solution Filter Assembly 25
The E17/E20/H20 26
To Turn on Machine 27
To Turn on Vacuum 27
To Turn on Brush Motor 27
To Turn on Cleaning Solution 27
To Charge Batteries 27
Hour Meter (Optional) 27
Solution Solenoid (Optional) 27
Machine Operation 27
Loading Brush 28
Unloading Brush 29
After Use 30
Maintenance 31
Troubleshooting 32
Warranty 34

Manufacturer PDF Provided by www.southeasternequipment.net

IMPORTANT SAFETY INSTRUCTIONS

Operators must read and understand this manual before operating or maintaining this machine.
Do not operate this machine in flammable or explosive areas.
This machine is designed solely for scrubbing dirt and dust in an indoor environment. Minuteman does not recommend using this machine in any other capacity.
The following information below may cause a potential hazard to the operator and equipment. Read this manual carefully and be aware when these conditions can exist. Take necessary steps to locate all safety devices on the machine and train the personnel operating the machine. Report any machine damage or faulty operation immediately. **Do not use machine if it is not in proper operating condition.**

For Safety During Operation

Keep hands and feet clear of moving parts while machine is in operation.
Make sure all safety devices are in place and operate properly. All covers, doors and latches must be closed and fastened before use.
During operation, attention should be paid to other persons in the work area and especially if small children are present.
Electric motors and components can cause an explosion when operated near explosive materials or vapor. Do not operate this machine near flammable materials such as solvents, thinners, fuels, grain dust, etc.
Store or park this machine on a level surface only. To prevent unauthorized use, machine should be stored or parked with the key removed.
This machine is designed for level operation only. **Do not operate on ramps or inclines greater than 2%**.
This machine is not suitable for picking up hazardous dusts.
Use caution when moving this machine into areas that are below freezing temperatures. Any water in the tanks or hoses can cause damage to the machine.

For Safety when Servicing or Maintaining Machine

Stop on level surface.
Disconnect the power to the machine by unplugging the red Battery connector located under the recovery tank near the batteries.
Avoid moving parts. Do not wear loose jackets, shirts, or sleeves when working on machine.
Avoid contact with battery acid. Battery acid can cause burns. When working on or around batteries, wear protective clothing and safety glasses. Remove metal jewelry. Do not lay tools or metal objects on top of batteries.
Charging batteries generates explosive gasses.
Do not charge batteries when open flames or sparks are present. Do not smoke.
Make sure the charger is turned off before disconnecting it from the machine.
Charge the batteries in a well-ventilated area with the battery cover removed completely.
Do not clean machine with a pressure washer.
Authorized personnel must perform repairs and maintenance. Use Minuteman supplied replacement parts.

SAVE THESE INSTRUCTIONS

Manufacturer PDF Provided by www.southeasternequipment.net

Inspection

Carefully unpack and inspect your **E17/E20/H20 Walk-Behind Scrubber** for shipping damage. Follow unpacking instructions on shipping pallet. Each unit has been tested and thoroughly inspected before shipment. Any damage is the responsibility of the delivery carrier who should be notified immediately.

Electrical

This machine is battery operated and designed to operate on 24 volts DC. (2) 12-volt batteries.

Batteries

We do not recommend mixing AMP hour capacities. Alternate battery sets can be used if they are equal physical size and capacity. If alternate battery sets are used please contact Minuteman for on board charger settings.

Operator Responsibility

Read this manual carefully before operating this machine.

The operator is responsible for taking care of the daily maintenance of the machine to keep it in good working condition. The operator must inform the service mechanic or supervisor when the scheduled maintenance intervals are required as stated in the *MAINTENANCE* section of this manual.

Before starting, familiarize yourself with the machine and its controls (see “Machine Overview, Front”, “Machine Overview, Rear”, “Control Console” diagrams).

Manufacturer PDF Provided by www.southeasternequipment.net

Machine Overview - Front

A	SPRAY BOTTLE / CUP HOLDER
B	SOLUTION FILL PORT
C	RECOVERY TANK LID
D	RECOVERY TANK
E	BRUSH DECK
F	FRONT WHEEL
G	REAR CASTER
H	SOLUTION TANK
J	FLOATING DECK SKIRT

Manufacturer PDF Provided by www.southeasternequipment.net

Machine Overview - Rear

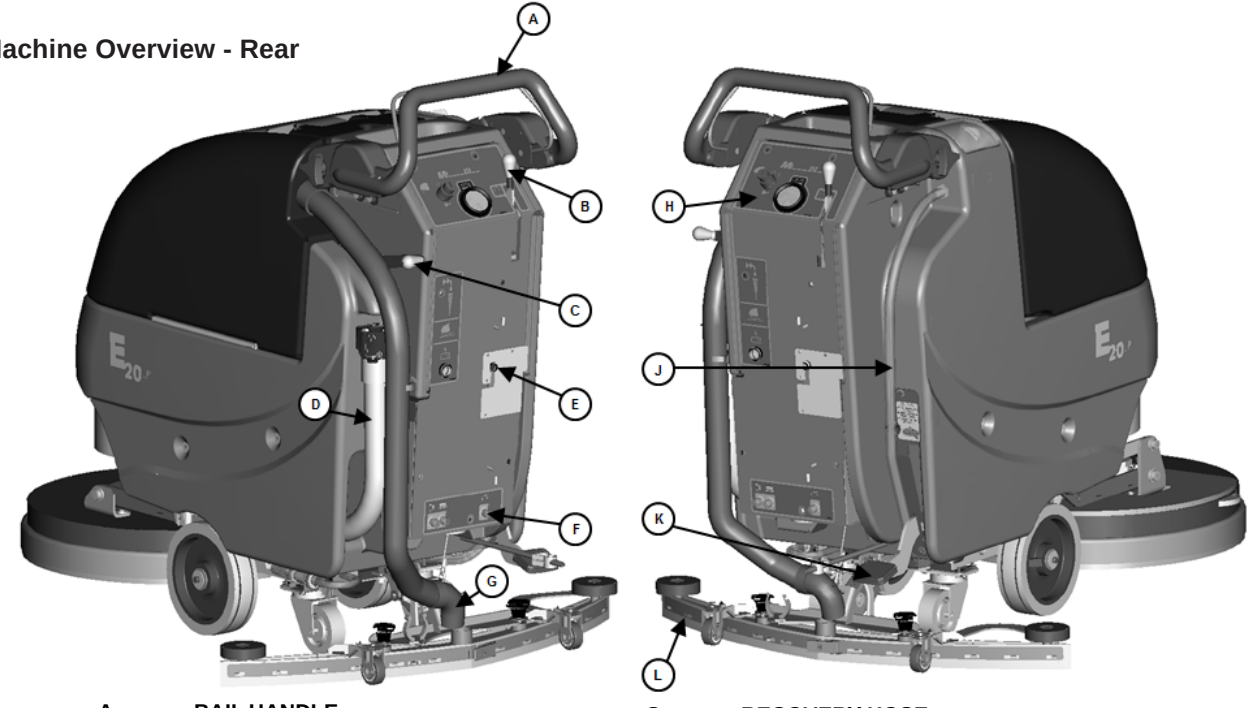

A	BAIL HANDLE
B	SQUEEGEE LIFT LEVER
C	SOLUTION CONTROL LEVER
D	RECOVERY TANK DRAIN HOSE
E	ONBOARD CHARGER CORD
F	CIRCUIT BREAKERS
G	RECOVERY HOSE
H	CONTROL PANEL
J	SOLUTION TANK DRAIN HOSE / LEVEL INDICATOR
K	BRUSH LIFT PEDAL
L	REAR SQUEEGEE

Manufacturer PDF Provided by www.southeasternequipment.net

Control Panel

A	BAIL HANDLE
B	HANDLE ADJUSTMENT KNOB
C	KEY SWITCH
D	SQUEEGEE LIFT LEVER
E	SOLUTION CONTROL LEVER
F	BATTERY GUAGE
G	CHARGE STATUS INDICATOR

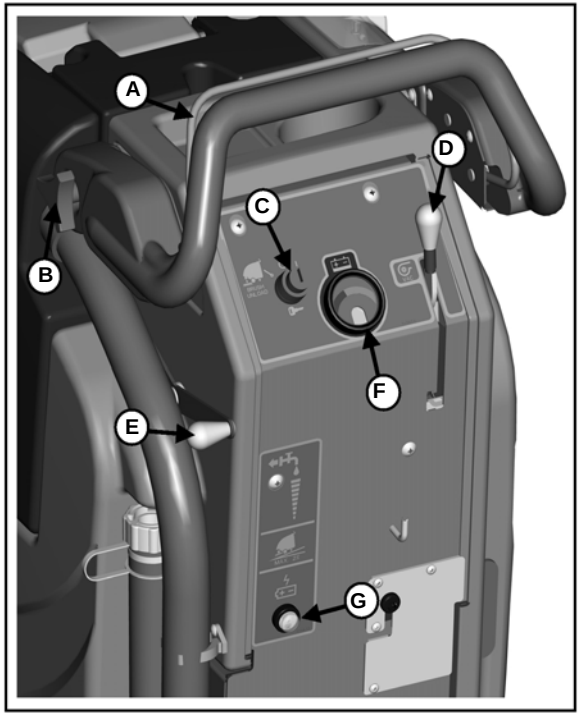

Manufacturer PDF Provided by www.southeasternequipment.net

Bail Handle

(A) When the scrubdeck is lowered to the floor, the bail handle enables the brush motor and moves the machine forward once depressed. This also allows the operator to automatically load the brush when the scrub deck is lowered over the brush.

Handle Adjustment Knobs

(B) Allows the handle position to be raised or lowered.

Key Switch

(C) Controls the machine's power (Brush Unload/Off/On) with a key for safety. This switch, when turned counter clockwise, operates the auto brush unload when scrubdeck is in the raised position. When it is turned to the ON position, the machine will operate.

Squeegee Lift Lever

(D) When actuated to the top position, the squeegee is lowered and the vacuum motor turns on. When locked in the bottom position, the squeegee is raised and the vacuum motor shuts off.

Solution Control Lever

(E) This lever controls the rate at which solution is dispensed. Moving the lever up will increase the amount of solution. Moving the lever down will decrease the solution rate. Moving the lever all the way down shuts off solution flow.

Battery Gauge

(F) This gauge displays the remaining battery charge.

Charge Status Indicator

(G) This gauge displays the status of the batteries during charging. The gauge has a readout of 3 LEDs. 1 Green, 1 yellow, 1 Red. Green indicating a full charge, Yellow indicating 80% charged, Red indicating the batteries are charging.

Manufacturer PDF Provided by www.southeasternequipment.net

Optional Hour Meter

Minuteman offers an optional hour meter for this machine. The optional kit replaces the power cord mounting bracket at the rear of the machine with one that contains an hour meter that runs when the brush motor is on.

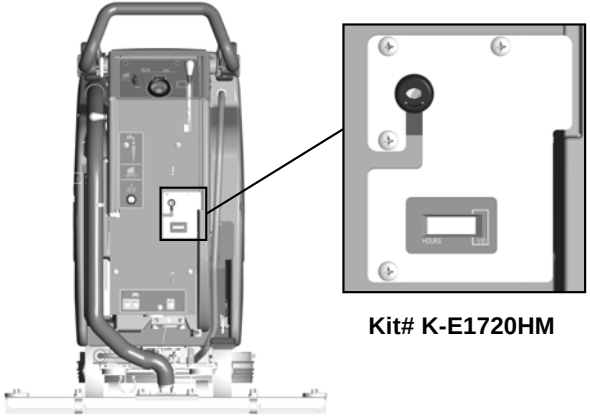

Kit# K-E1720HM

Manufacturer PDF Provided by www.southeasternequipment.net

Circuit Breakers

The circuit breaker is located at the bottom of the back panel of the machine.

A **Main Control Breaker - 4A**
B **Brush Motor Breaker - 30A**
C **Vacuum Motor Breaker - 20A**

If any of the functions above are not operating, check if the circuit breaker buttons have tripped. Press to reset.

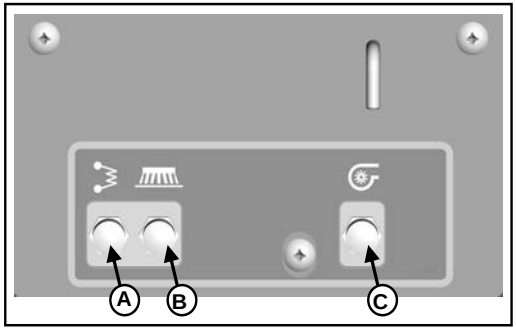

Battery Compartment

The battery compartment is located under the recovery tank. The Battery compartment can be accessed for servicing and maintenance by tilting the recovery tank (make sure recovery tank has been drained before tilting). The battery compartment contains two 12-volt batteries connected in series. Connect the batteries according to the battery connection diagram (*see diagram*). The battery tray may be drained if neccessary using the orange drain hose located above the rear caster on the right side of the machine.

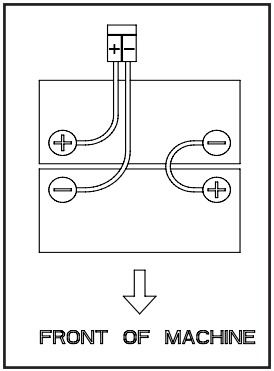

Manufacturer PDF Provided by www.southeasternequipment.net

Rear Squeegee

A Squeegee
B Star-shaped knob
C Adjusting screw for angle adjustment
D Suction hose
E Blade fastening latch
F Washers for caster height adjustment
G Caster Wheel Axle

Cleaning the Squeegee

Check the squeegee **(A)** daily and clean as necessary.
1. Pull off the suction hose **(D)**.
2. loosen the two star-shaped knobs **(B)**.
3. Remove the squeegee **(A)**.

Changing the Squeegee Blades

Check the inner and outer squeegee blades on the squeegee **(A)** weekly for signs of wear. The squeegee blades can be turned 4 times to use all 4 edges.
1. Pull off the suction hose **(D)**, loosen the two star-shaped knobs **(B)** and remove the squeegee.
2. Unlock the fastening device **(E)** and remove the outer squeegee blade. Turn the squeegee blade or install a new one, as necessary. Change the inner squeegee blade in the same way.

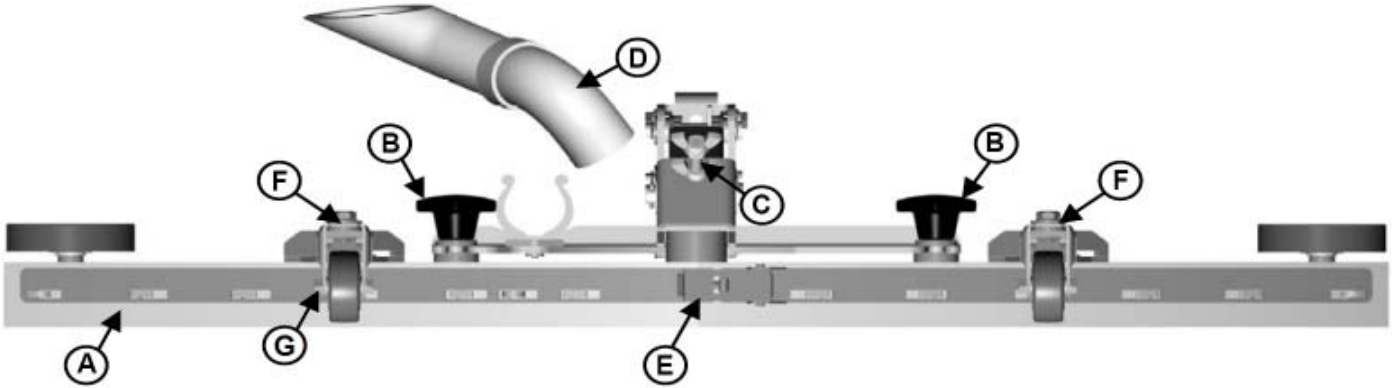

Manufacturer PDF Provided by www.southeasternequipment.net

Adjusting the Squeegee Blades
Angle Adjustment

The angle adjustment is the decisive factor in ensuring that the squeegee blades on the squeegee lie evenly on the floor.

1. Park the machine on a level surface and lower the squeegee.
2. Loosen the lower wing nut **(B)** on the adjusting screw **(A)** and adjust the squeegee using the adjusting screw so that the ends of the squeegee blades still have contact with the floor. By turning the adjusting screw **(A)** counterclockwise, the clearance between squeegee blade and floor is **increased** in the center (Fig. 1). When turning the adjusting screw **(A)** clockwise, the clearance between squeegee blade and floor is **reduced** in the center (Fig. 2).
3. Switch the machine on and check the suction pattern. When the machine is in operation, the full edge of the squeegee blades (center and outer areas) must be applied as evenly as possible.
4. Tighten the lower wing nut **(B)** on the adjusting screw **(A)** against the metal bracket to lock in the pitch setting.

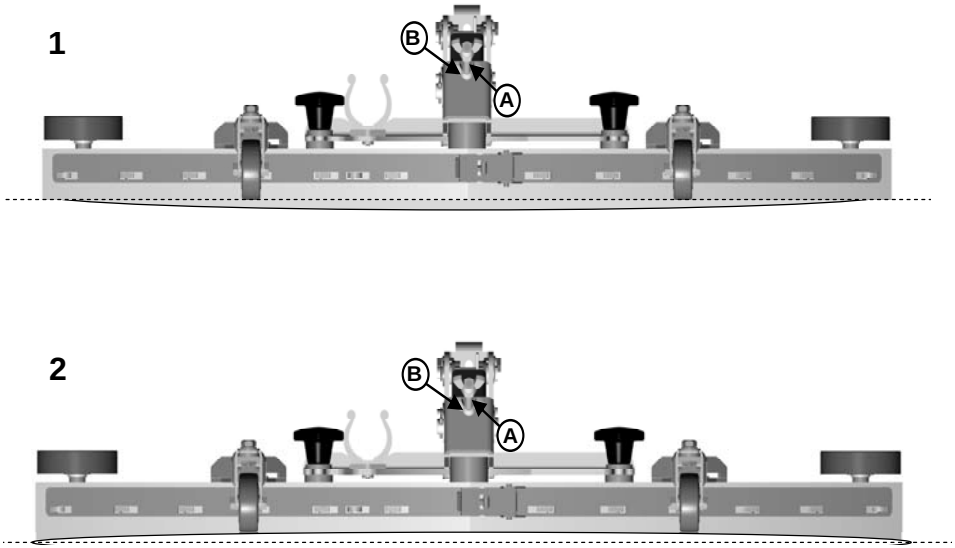

Manufacturer PDF Provided by www.southeasternequipment.net

Adjusting the Squeegee Blades Height Adjustment

If streaks are present, despite an optimum angle adjustment, the clearance between the caster wheels and floor must be adjusted by changing the number of washers underneath the bracket that holds the wheel. The squeegee height is preset at the factory to 2mm.

In cases of uneven floors, e.g. grouted tile, etc., try 3mm illustration for washer configuration. In cases of very uneven floors, e.g. poorly laid tiles (water does not run off) ,, configure as shown in 4mm illustration.

Keep the extra washers by installing them above the bracket as shown.

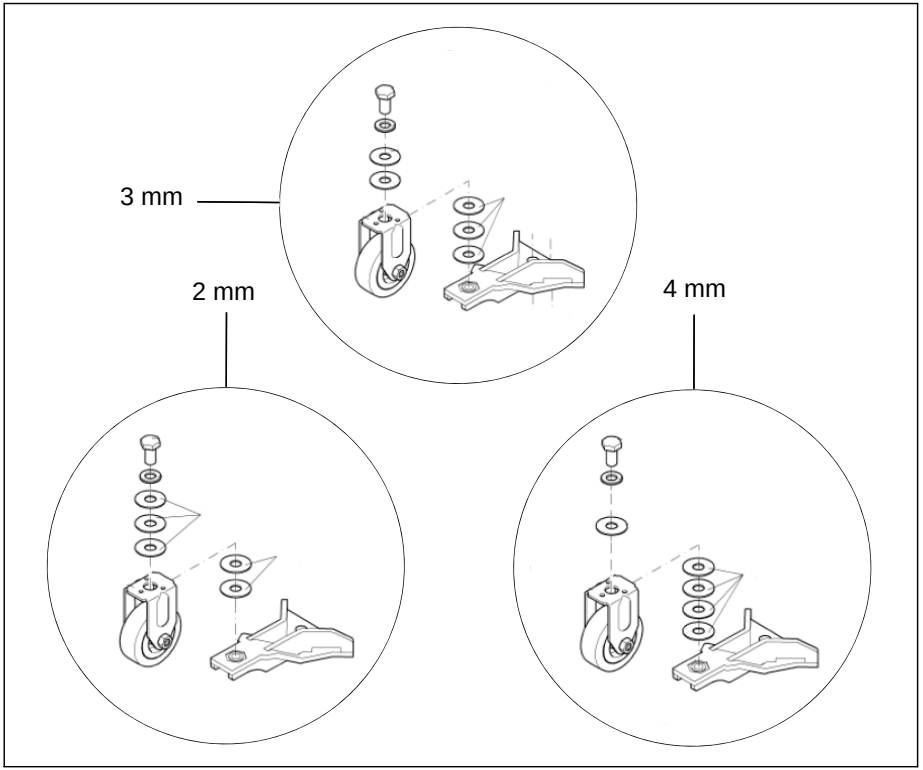

Manufacturer PDF Provided by www.southeasternequipment.net

Handle Adjustment

The handle was designed with operator comfort in mind. The angle and horizontal position of the handle can be adjusted to suit the needs of the operator.

Angle Adjustment

The handle angle can be adjusted without tools by loosening the **Angle Adjustment Knob (A)** on each side and rotating the handle to the desired position. There are 5 angular positions 11.25° apart for a total of 45° between the minimum and maximum position.

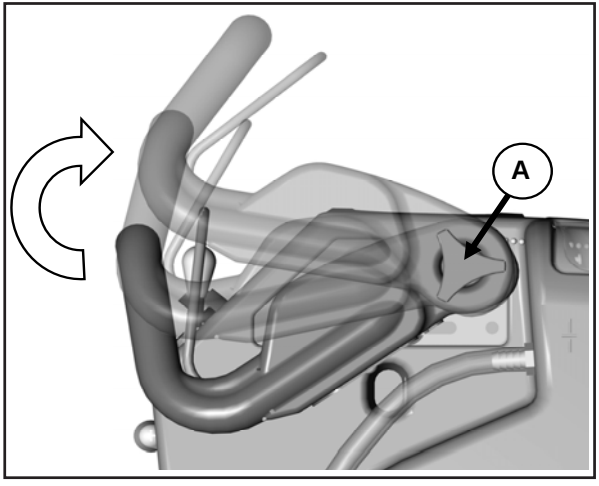

Manufacturer PDF Provided by www.southeasternequipment.net

Horizontal Adjustment

The horizontal position can be adjusted by removing the 4 **Mounting Bolts (B)** (2 each side) with a 9/16" socket and sliding the **Mounting Plate (P)** to one of the 3 available positions. The machine is shipped from the factory in position 1.

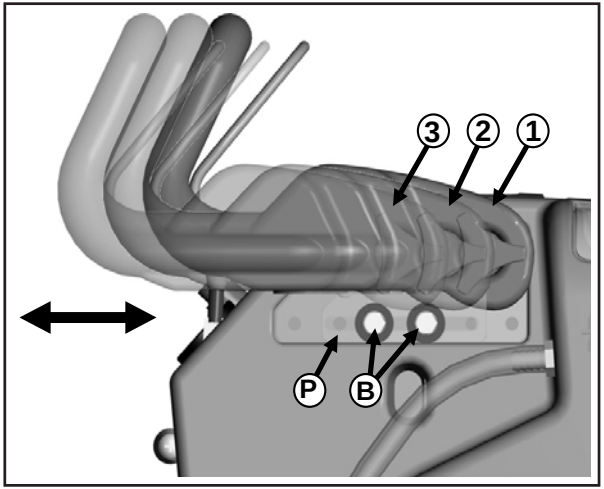

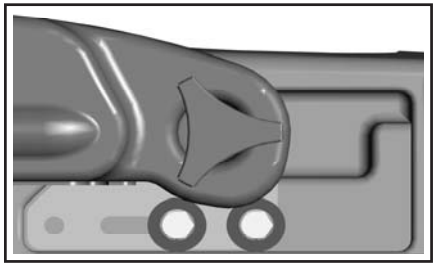

Plate Position 3
(Fully Extended)

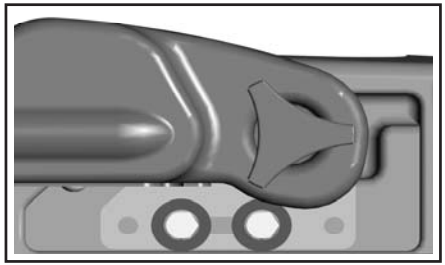

Plate Position 2

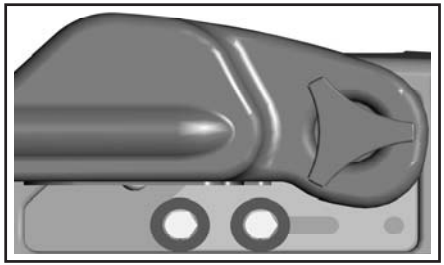

Plate Position 1
(Shipping Position)

Manufacturer PDF Provided by www.southeasternequipment.net

Aqua-Saver Solution Control

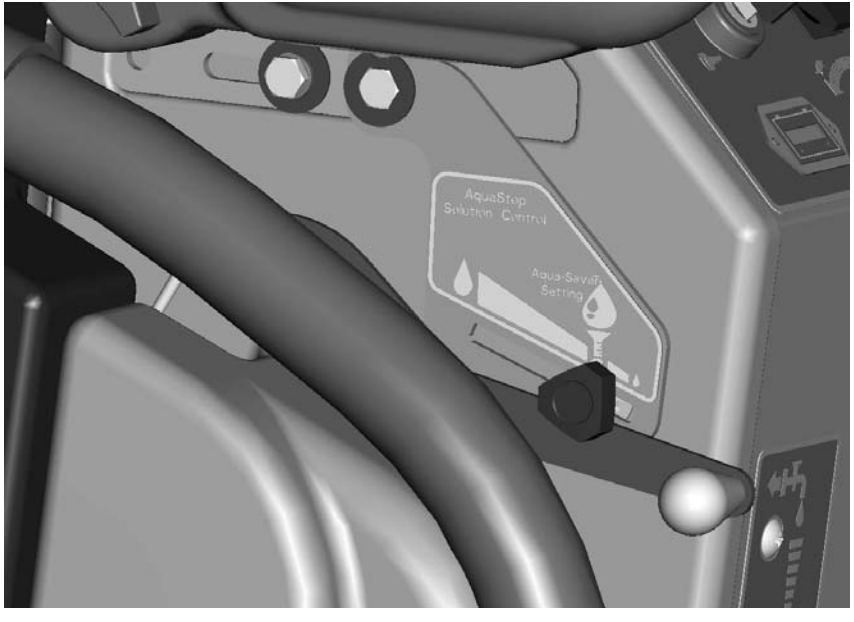

In order to consistently conserve water when using Aquastop brushes, the guide will stop the solution control lever at a low rate setting. This setting may be adjusted by loosening the knob, adjusting the lever, and retightening the knob. Slide the knob all the way forward to dispense maximum solution.

Manufacturer PDF Provided by www.southeasternequipment.net

Solution Tank Drain Hose

The solution tank may be drained by removing the **Solution Tank Drain Hose (A)** from the **Hose Barb (B)** and routing the hose to a floor drain.

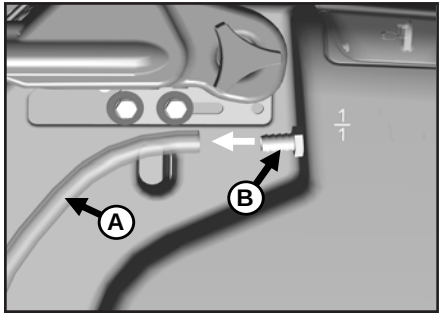

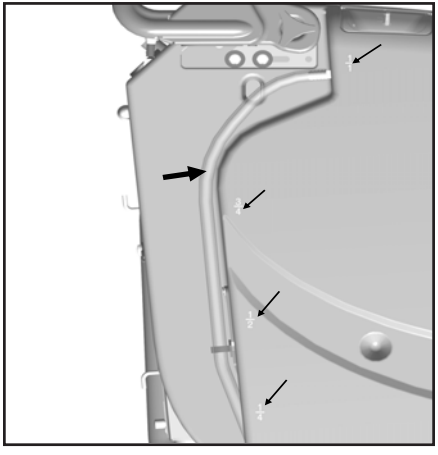

Solution Level Indicator

The Solution Tank Drain Hose also serves as a water level indicator for the solution tank. The amount of water remaining in the solution tank can be seen through the clear drain hose. Level markers molded into the solution tank are positioned at 1/4, 1/2, 3/4, and full levels.

Manufacturer PDF Provided by www.southeasternequipment.net

Solution Fill Filter

The **Solution Fill Filter (B)** should be cleaned regularly. To remove, simply open the **Solution Tank Lid (A)** and pull the filter out.

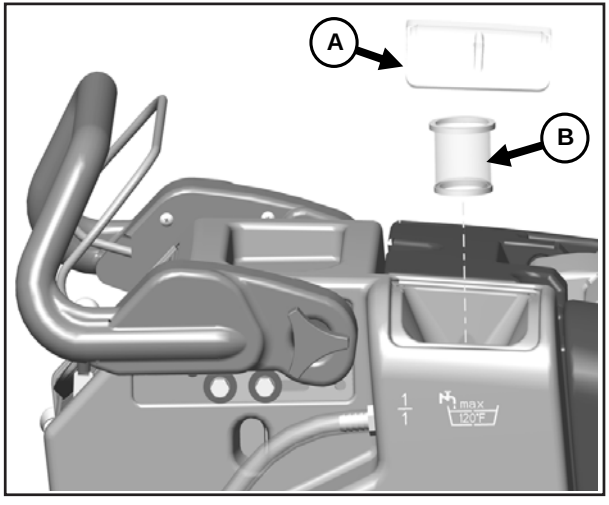

Manufacturer PDF Provided by www.southeasternequipment.net

Screened Float

If the recovery tank **(C)** is overfilled or a large amount of foaming is present, the screened float **(B)** blocks the vacuum intake inside the tank protecting the vacuum motor and internal electronics from water damage. It is essential to keep the float in working order through regular maintenance.

The float should be cleaned daily by thoroughly rinsing with a hose. Removal of the screened float is not necessary for daily maintenace.

At least once a month the screened float should be completely removed, cleaned, and checked for any damage to the seal or metal screen.

WARNING: Damage to the machine may occur if operated without the screened float properly in place.

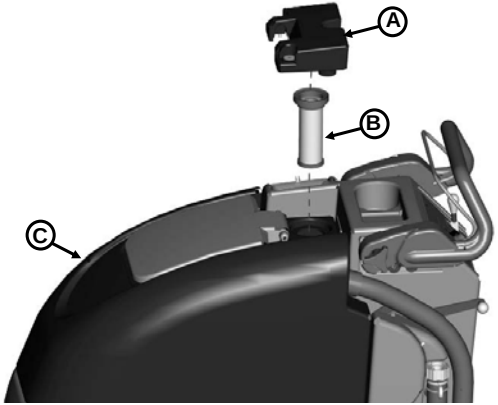

Manufacturer PDF Provided by www.southeasternequipment.net

Screened Float Removal

The screened float is positioned between the vacuum manifold **(A)** and recovery tank **(C)**. The screened float **(B)** can be accessed by removing the 1.5” bolt **(D)** and two 1.25” bolts **(E)** that attach the manifold to the recovery tank using a 7/16” socket.

A	**Vacuum Manifold**
B	**Screened Float**
C	**Recovery Tank**
D	**1.5” Bolt**
E	**1.25” Bolt (2)**
F	**Helical Washer (3)**
G	**Flat Washer (3)**

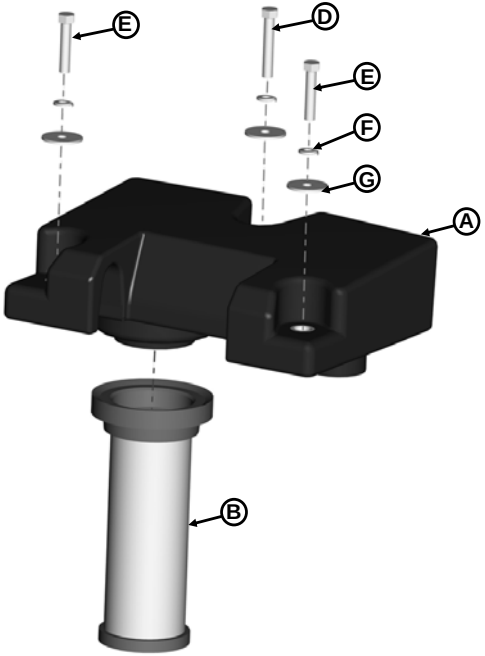

Manufacturer PDF Provided by www.southeasternequipment.net

Recovery Tank Drain Hose

Twist Cap to Open and Drain

Twist & Lift cap to clean out large debris

Deck Skirt Removal

(Do not lower with out brush)

CAUTION: Bristles may be damaged if deck is lowered onto floor without brush/pad driver installed.

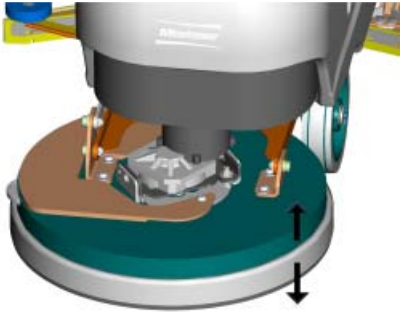

Brush Deck Skirt will ride on the floor in use and float up or down based on amount of pad/ brush remaining.

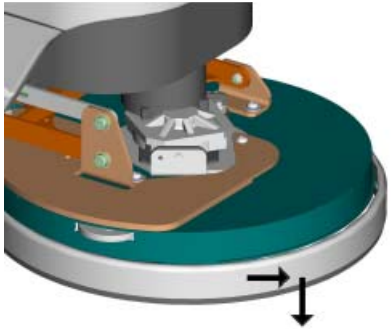

With brush removed & deck raised, Remove skirt for cleaning by pulling forward, then down over the edge of the deck.

Manufacturer PDF Provided by www.southeasternequipment.net

Optional Solution Solenoid

Minuteman offers an optional solution solenoid for this machine. The optional solenoid automatically turns off the solution flow when the brush motor is not active.

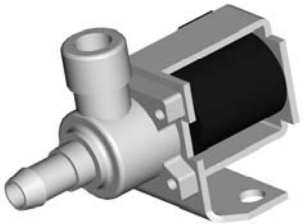

Kit# K-E1720S

In-Line Solution Filter Assembly

The filter assembly is located at the rear of the machine on the left hand side, just under the solution tank. It is important to check and clean the screened washer inside the assembly regularly to ensure proper solution flow. To open, unscrew the assembly (Note that the cone of the washer is facing out toward the rear of the machine). Remove washer and rinse, reinsert and screw assembly together, tightening by hand. **Overtightening with tools may damage the plastic threads.**

A	**Fitting, MGHT**
B	**Screened Washer**
C	**Hose Barb Insert**
D	**Fitting, FGHT**

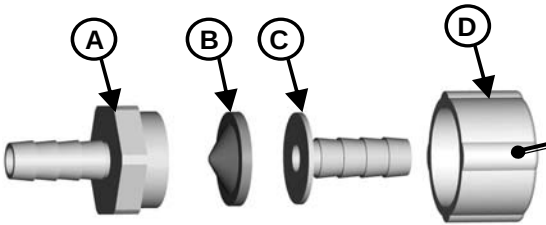

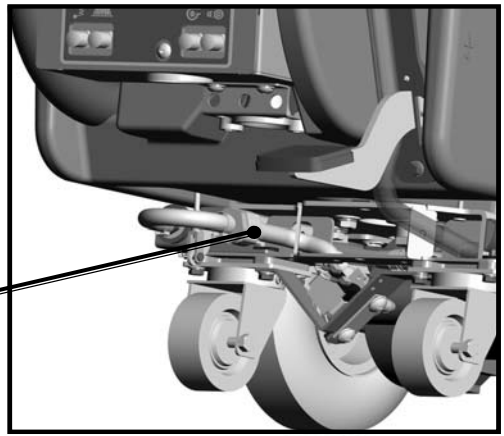

Manufacturer PDF Provided by www.southeasternequipment.net

This machine was designed with total operator comfort and ease of use in mind. All machine components have been designed as a total system to efficiently clean dirty floors. This machine has two available scrub head types and sizes to fit specific applications. *Please contact your Minuteman representative for specific recommendations for the correct scrub head type, size, and brush type and chemical applications.*

Before using the machine, always perform the following steps to ensure proper machine operation:

- Check under the machine for leaks.
- Check the rear squeegee for wear and damage.
- Check the solution and recovery tank levels.

After using the machine, always perform the following steps:

- Check the battery charge level. Charge batteries if necessary. When charging batteries, extra precaution is required:
  - Battery acid can cause burns.
  - When working on or around batteries, always wear protective clothing and safety glasses.
  - Remove metal jewelry. Do not lay tools or metal objects on top of the batteries.
  - Charging batteries generate explosive gasses.
  DO NOT CHARGE BATTERIES WHEN OPEN FLAMES OR SPARKS ARE PRESENT. DO NOT SMOKE.
  - Charge the batteries in a well-ventilated area.
  - Fluid levels should be checked before and after charging and maintained at the proper levels. If low, add distilled water until the metal plates are covered.
  - If the machine is not used for an extended period of time, batteries should be kept fully charged with a boost charge once a week.
- Check for wire, string, or twine wrapped around the scrub brushes.
- Check the rear squeegee for wear and damage.
- Check the rear squeegee suction hose for obstructions.
- Drain and clean the recovery tank and drain hose cap.
- Check under the machine for leaks.
- Check the service records to determine maintenance requirements.

WARNING!
- Be sure you understand the machine controls and their functions.
- While on ramps or inclines, avoid sudden stops when tanks are filled.
- Avoid abrupt sharp turns. Slow down driving speed when going downhill.

Manufacturer PDF Provided by www.southeasternequipment.net

To Turn on Machine
Turn key to operate position (I)

To Turn on Vacuum
Lower squeegee into operate position, vacuum motor will turn on automatically.

To Turn on Brush Motor
Move brush lift pedal from the “home” (down) position to the operating position (up). Depress the operator bail handle. Brush motor will turn on and assist to propel the machine forward.

To Turn on Cleaning Solution
Move solution lever from closed (down) position up to the desired flow position.

NOTE: When you no longer want solution or stop the machine for an extended period of time, you must move the solution lever back to the closed (down) position. Otherwise, solution will continue to flow onto the floor.

To Charge Batteries
When the battery / fault gauge reaches the red zone the batteries need to be recharged. Take the machine to a well ventilated area, unwind the battery charger power cord from the electrical box cover and plug into an appropriate power source. After approximately 10 seconds the battery charge status indicator will turn on.

For Wet batteries only: Check the battery water levels before each use, refill as needed with distilled water.

Caution: DO NOT OVERFILL. Fill water 1/4 “ - 1/2” above the separators. Failure to maintain the batteries may result in battery failures.

WARNING: Charging batteries generates explosive gasses. Do not charge batteries when open flames or sparks are present. Do not smoke. Charge the batteries in a well-ventilated area .

Hour Meter (Optional)
Hour meter will automatically record operating time of the brush motor.

Solution Solenoid (Optional)
Water solenoid will operate when the brush motor is turned on. The solution lever must be moved to the desired operating position, but does not need to be moved to the closed position when stopping for brief periods.

Manufacturer PDF Provided by www.southeasternequipment.net

Loading Brush

1. To load the brush, first center the E17/E20 brush deck over the scrub brush.

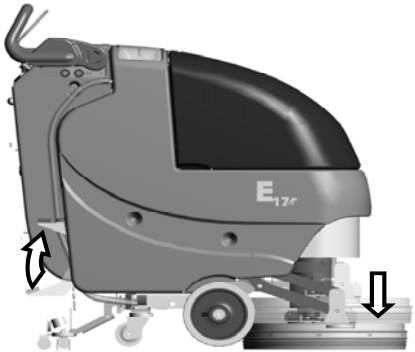

2. Lower the scrub deck by releasing the deck lift pedal.

3. With the key turned on, pull the bail handle to engage the scrub brush onto the scrubdeck.

Manufacturer PDF Provided by www.southeasternequipment.net

Unloading Brush

1. To unload the brush, first lift the scrub deck by pressing down on the deck lift pedal . Make sure the pedal is in the “home” position shown below.

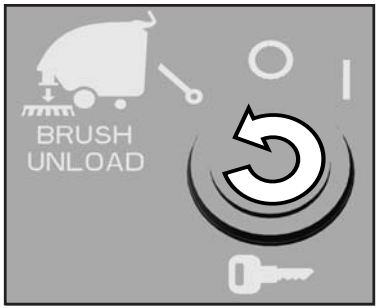

2. Momentarily turn the key (1 to 2 seconds) to the “Brush Unload” position then let the key return to the off (O) position.

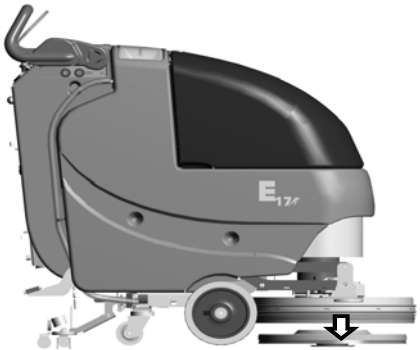

3. When done correctly the brush should release from the scrub deck and fall to the floor.

CAUTION: Make sure scrub deck is clear of all personnel and obstructions before operating Brush Unload.

Manufacturer PDF Provided by www.southeasternequipment.net

After Use

1. When finished scrubbing, lift the scrub deck and turn the solution lever off. Lift the rear squeegee. Move the machine to a service area for daily maintenance and review items that may need service.
2. Empty the solution tank by disconnecting the **solution tank drain hose** from the barb fitting and routing hose to a drain. Rinse the tank with clean water to prevent any buildup of dried chemicals that could clog the plumbing inside the recovery tank, and the drain hose cap..
3. Empty and clean the recovery tank by flushing with a hose. Be sure to also clean the float shut off screen.
4. Remove the **brush** or pad holder and rinse it in warm water and hang to dry.
5. Remove the **rear squeegee**, rinse with warm water and reinstall after cleaning.
6. Check the **maintenance schedule** in the next section and perform any required maintenance before storing the machine.
7. Store the machine indoors in a clean dry place. Keep from freezing. Leave solution and recovery tank lids open for ventilation to prevent odor buildup.
8. Turn **Key switch** *OFF* **(O)** and remove key.

Manufacturer PDF Provided by www.southeasternequipment.net

Daily	Weekly	Monthly	Yearly
Charge Batteries	Check Each Battery Cell(s) Water Level	Lubrication – Grease Fittings	Check Carbon Brushes
Check/Clean Tanks & Hoses	Check/Clean brush deck skirt		
Check/Clean the Brush/Pad	Check/Clean Solution Filter		
Check/Clean the Squeegee			
Check/Clean Vacuum Shut-Off Float in Recovery Tank			

Have a qualified service technician check the vacuum motor carbon motor brushes once a year or after 300 operating hours.
The brush motor and transaxle motor carbon brushes should be checked every 500 hours or once a year.
NOTE: Refer to the Service Manual for more detail on maintenance and service repairs.

Regularly scheduled lubrication of certain machine parts should be performed to insure trouble-free operation of the machine. *Apply a generous amount of grease into the fittings on the rear caster swivel (2) until grease seeps out around the bearings.*
Apply lubricant or light machine oil to lubricate the:
- *Pivot mounting point of the rear squeegee to the chassis (1)*
- *Rear squeegee caster wheel axle (2)*

Manufacturer PDF Provided by www.southeasternequipment.net

Problem	Possible Cause	Remedy
Poor water pick-up	Worn or torn squeegee blades	Rotate or replace blades
	Recovery tank full	Empty recovery tank
	Recovery tank drain hose leak	Secure drain hose cap or replace
	Recovery tank lid gasket leak	Replace gasket lid cover properly
	Debris caught in squeegee	Clean squeegee
	Vacuum hose clogged	Remove debris and flush hose
	Using too much solution	Adjust solution control lever
	Recovery hose to squeegee or recovery tank disconnected or damaged	Reconnect or replace recovery hose
Poor scrubbing performance	Worn brush	Replace brush or pad
	Wrong brush or cleaning chemical	Consult Minuteman
	Debris caught on scrub brush	Remove debris
	Moving machine too fast	Adjust Speed
	Not using enough solution	Adjust solution flow setting
	Low battery charge	Recharge batteries
	Retaining ring on brush motor shaft not in groove	Remove brush hub assembly and slide ring into groove
Inadequate solution flow or no solution to the floor	Solution tank empty	Fill solution tank
	Solution lines, valves, or filter clogged	Flush lines and clean solution filter.
	Solution Lever in down position	Move lever up
Machine does not operate	Tripped Control Power circuit breaker	Reset Breaker
	Batteries have low charge	Recharge Batteries
	Battery charger operating	Unplug battery charger when charge is complete

Manufacturer PDF Provided by www.southeasternequipment.net

Problem	Possible Cause	Remedy
Vacuum motor does not turn on	Recovery tank full	Empty recovery tank
	Excessive foaming in recovery tank.	Empty recovery tank. Use less or change chemical. Use defoaming agent.
	Carbon Brushes worn	Replace carbon brushes
	Vacuum switch disconnected	Connect wiring
	Tripped vacuum motor circuit breaker	Reset breaker
	Broken vacuum limit switch	Replace switch by squeegee lift lever
	Squeegee in raised position	Lower squeegee
Brush does not unload	Foot pedal not in “home” position	Place pedal in notch
	Tripped brush motor circuit breaker	Reset breaker
	Broken brush motor switch	Replace switch
	Damaged brush block or drive hub	Replace
	Retaining ring on brush motor shaft not in groove	Remove brush hub assembly and slide ring into groove

Charger Warning Indicators		
	LED Status	**Description**
Warning	**RED LED lamp blink once**	Output open circuit or short circuit or reverse polarity connection of charger to battery. Battery voltage is too high (may be connected to wrong voltage battery).
	RED LED lamp blink twice	Abnormal cycle (may be weak or bad battery) Charging time has safety timed out due to battery problem.

Manufacturer PDF Provided by www.southeasternequipment.net

Minuteman International Made Simple Commercial Limited Warranty

REVISION O EFFECTIVE 4/1/2016

Minuteman International, Inc. warrants to the original purchaser/user that the product is free from defects in workmanship and materials under normal use. Minuteman will, at its option, repair or replace without charge, parts that fail under normal use and service when operated and maintained in accordance with the applicable operation and instruction manuals. All warranty claims must be submitted through and approved by factory authorized repair stations.

This warranty does not apply to normal wear, or to items whose life is dependent on their use and care, such as belts, cords, switches, hoses, rubber parts, electrical motor components or adjustments. Parts manufactured by Minuteman are covered by and subject to the warranties and/or guarantees of their manufacturers. Please contact Minuteman for procedures in warranty claims against these manufacturers.

Special warning to purchaser -- Use of replacement filters and/or pre-filters not manufactured by Minuteman or its designated licensees, will void all warranties expressed or implied. A potential health hazard exists without original equipment replacement.

All warranted items become the sole property of Minuteman or its original manufacturer, whichever the case may be.

Minuteman disclaims any implied warranty, including the warranty of merchantability and the warranty of fitness for a particular purpose. Minuteman assumes no responsibility for any special, incidental or consequential damages.

This limited warranty is applicable only in the U.S.A. and Canada, and is extended only to the original user/purchaser of this product. Customers outside the U.S.A. and Canada should contact their local distributor for export warranty policies. Minuteman is not responsible for costs or repairs performed by persons other than those specifically authorized by Minuteman. This warranty does not apply to damage from transportation, alterations by unauthorized persons, misuse or abuse of the equipment, use of non-compatible chemicals, or damage to property, or loss of income due to malfunctions of the product.

If a difficulty develops with this machine, you should contact the dealer from whom it was purchased.

This warranty gives you specific legal rights, and you may have other rights which vary from state to state. Some states do not allow the exclusion or limitation of special, incidental or consequential damages, or limitations on how long an implied warranty lasts, so the above exclusions and limitations may not apply to you.

Manufacturer PDF Provided by www.southeasternequipment.net

Cord Electric Group	5yrs	3yrs	12yrs	90 days
Battery Operated Group	5yrs	3yrs	12yrs	90 days

Exceptions…….

Model	**Parts**	**Labor**	**Poly**	**Travel****
Port A Scrub, all models	1yr	6months	12yrs	90 days
A3S Blower	1yr	1yr	0	0
Phenom Dual Motor Upright Vacuums	2yrs	2yrs	0	0
Explosion Proof Vacuum	1yr	1yr	0	0
Propane Burnisher	1yr	1yr	0	90 days
				**Travel, 2 hours max

Stand-alone Battery Chargers:	One year
Replacement Parts:	Ninety days
Batteries:	0-3 months full replacement, 4-12 months pro-rate
Polypropylene Plastic Tanks:	12yr warranty, no additional labor

Minuteman®
Excellence Meets Clean

Minuteman International · 14N845 U.S. Route 20 · Pingree Grove, Illinois 60140 USA
Phone 800-323-9420 · Fax 800-422-6933
www.minutemanintl.com

A Member of the Hako Group

Manufacturer PDF Provided by www.southeasternequipment.net

988720UM
Rev F 07/16