REVISIONS				
ECO #	REV	DESCRIPTION	DATE	APPROVED

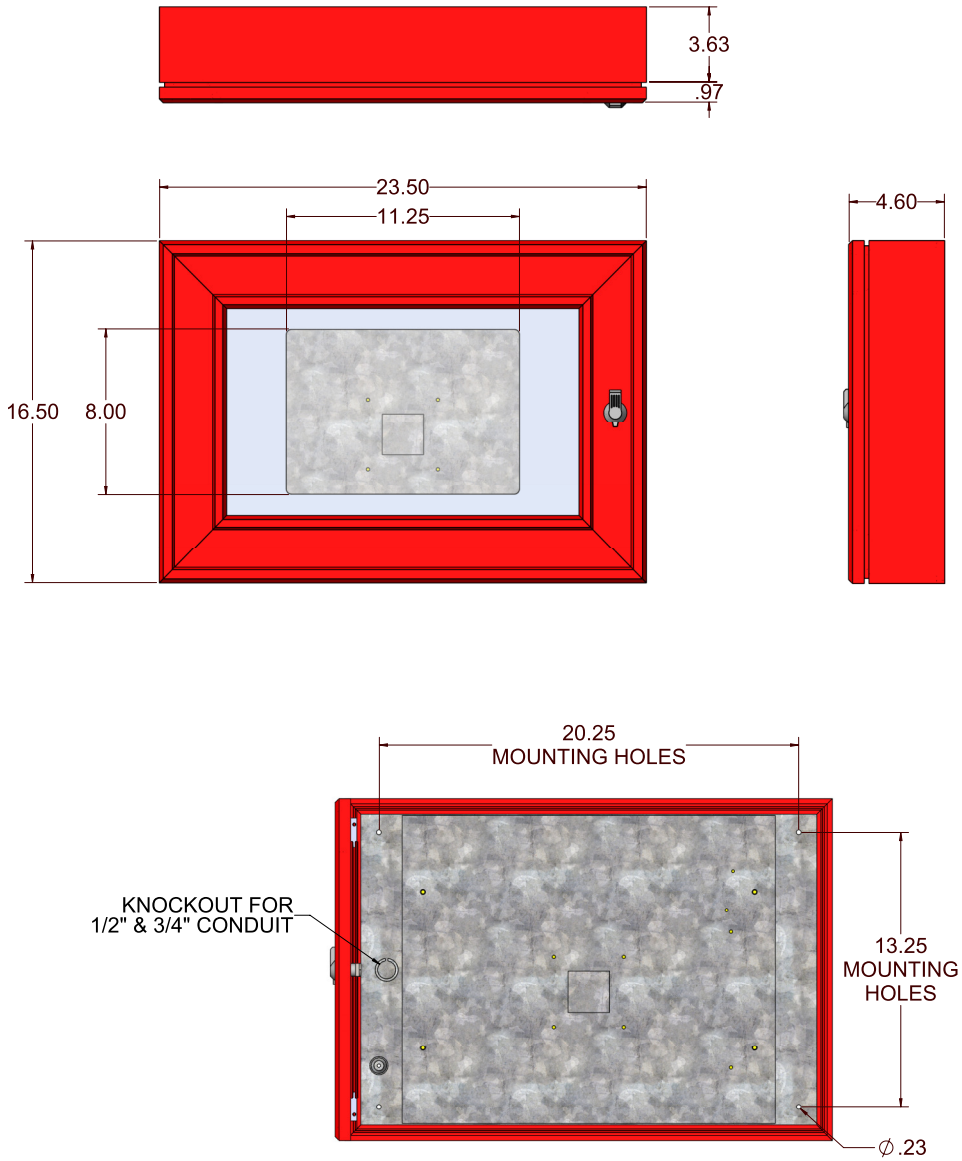

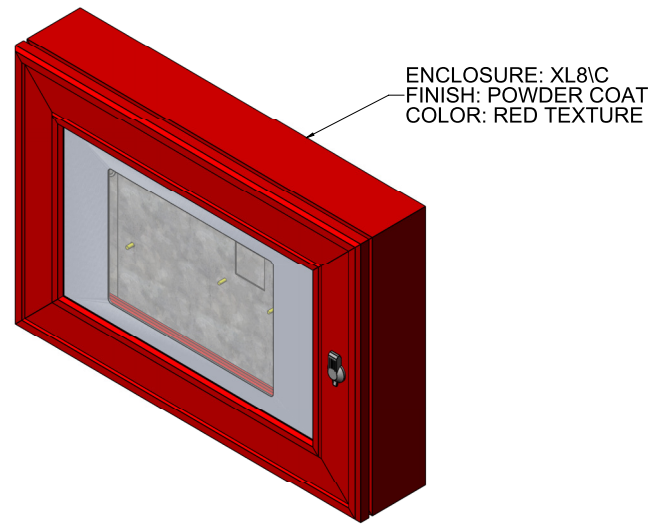

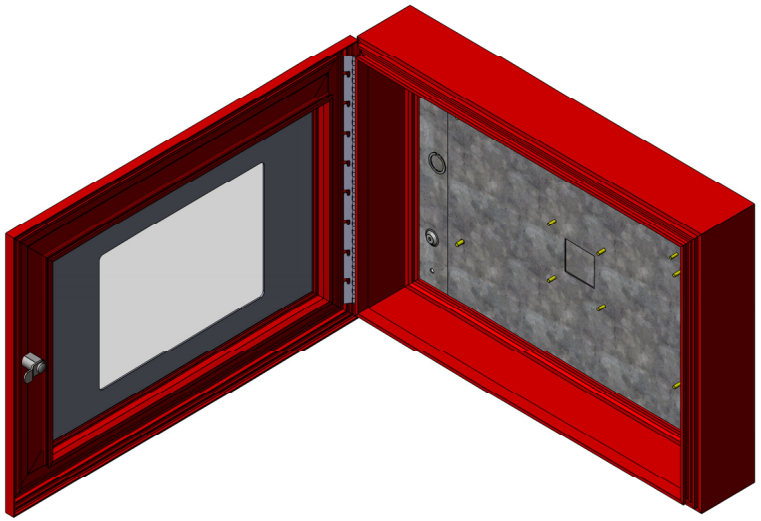

PROJECT: EP04552	UNLESS OTHERWISE SPECIFIED:		NAME	DATE	SPACE AGE ELECTRONICS INC
SCALE: 1:3	DIMENSIONS ARE IN INCHES TOLERANCES: FRACTIONAL ±1/32 ANGULAR: MACH ±0.5 BEND ±0.5 TWO PLACE DECIMAL ±.031 THREE PLACE DECIMAL ±.015	DRAWN	MWP	9/3/2020	TITLE: XL8-WA-LBSR-FT2015 LCD ENCL (R YM9767
SAE/OWNER: ENG		CHECKED			
PART NO.: YM9767		ENG APPR.			
PROGRAM NO.:	INTERPRET GEOMETRIC TOLERANCING PER:	MFG APPR.			
	MATERIAL: XL8\C	Q.A.			
NEXT ASSY:	FINISH:	COMMENTS:			SIZE D DWG. NO. CP40861 REV 1
APPLICATION					SCALE: 1:3 WEIGHT: SHEET 1 OF 1

PROPRIETARY AND CONFIDENTIAL
THE INFORMATION CONTAINED IN THIS DRAWING IS THE SOLE PROPERTY OF SPACE AGE ELECTRONICS INC. ANY REPRODUCTION IN PART OR AS A WHOLE WITHOUT THE WRITTEN PERMISSION OF SPACE AGE ELECTRONICS INC. IS PROHIBITED.

D CP40861 REV