Manufacturer PDF Provided by www.southeasternequipment.net

Scrubtec 337.2 - Vantage 14

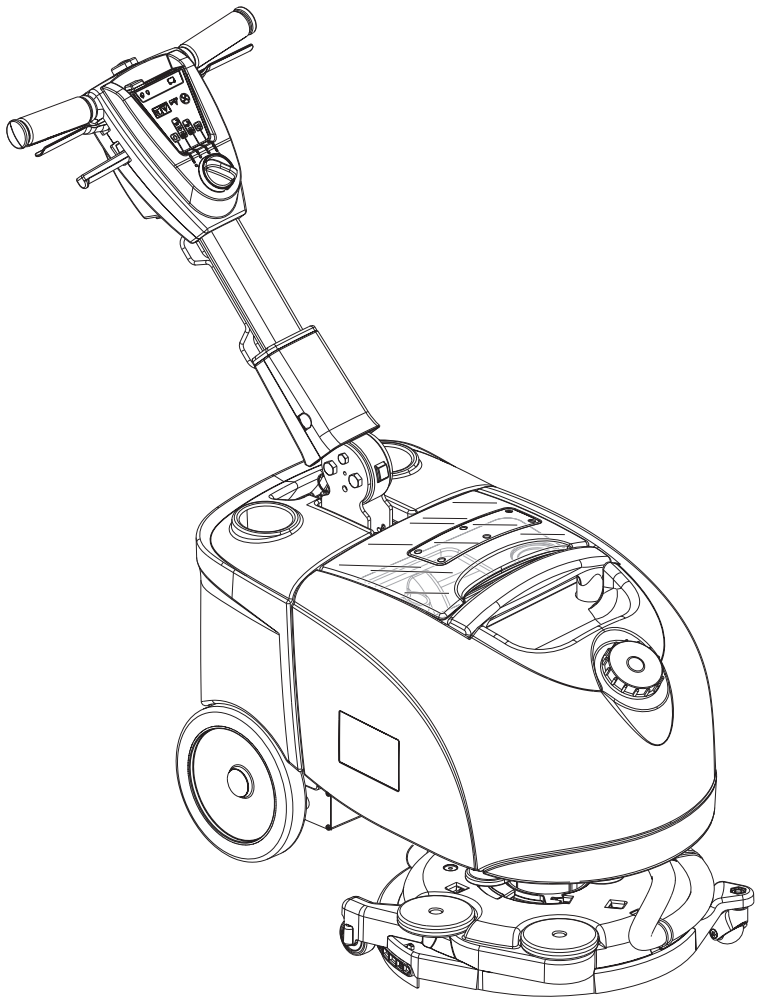

Service Manual

Nilfisk-ALTO Scubtec 337.2, 9087343020

Clarke Vantage 14, 9087345020

Nilfisk ALTO works for you

Clarke®

English

2013-05 Form No. 9099961000

Revised 2013/11

Manufacturer PDF Provided by www.southeasternequipment.net

Table of Contents

General Information . . . 4
Machine General Description . . . 4
Service Manual Purpose and Field of Application . . . 4
Other Reference Manuals . . . 4
Conventions. . . . 5
Service and Spare Parts . . . 5
Serial Number Label . . . 5
Safety . . . 6
Visible Symbols on the Machine . . . 6
Symbols . . . 6
General Instructions . . . 6
Machine Lifting. . . . 8
Machine Transportation . . . 8
Machine Nomenclature (know your machine) . . . 9
Control Panel . . . 10
Service and Diagnostic Equipment . . . 11
Technical Data . . . 12
Dimensions . . . 13
Maintenance . . . 14
Scheduled Maintenance Table . . . 14

Chassis System . . . 15
Frame (main parts). . . . 15

Control System . . . 16
Functional Description . . . 16
Component Locations . . . 17
Removal and Installation . . . 18
Specifications . . . 21

Electrical System . . . 22
Functional Description . . . 22
Fuses . . . 22
Wiring Diagram . . . 22
Component Locations . . . 23
Maintenance and Adjustments . . . 24
Troubleshooting . . . 28
General Wiring Diagram. . . . 29
Specifications . . . 30

Recovery System . . . 31
Functional Description . . . 31
Wiring Diagram . . . 31
Component Locations . . . 32
Maintenance and Adjustments . . . 34
Troubleshooting . . . 36
Removal and Installation . . . 38
Specifications . . . 39

Manufacturer PDF Provided by www.southeasternequipment.net

Scrub System, Disc 40
Functional Description 40
Wiring Diagram 40
Component Locations 41
Maintenance and Adjustments 43
Troubleshooting 44
Removal and Installation 46
Specifications 49

Solution System 50
Functional Description 50
Wiring Diagram 50
Component Locations 51
Troubleshooting 53
Removal and Installation 54
Specifications 55

Squeegee System 56
Functional Description 56
Component Locations 57
Maintenance and Adjustments 58
Troubleshooting 60

Wheel System, Non-Traction 61
Component Locations 61
Specifications 62

Manufacturer PDF Provided by www.southeasternequipment.net

General Information

Machine General Description

The Scubtec 337.2 is a “walk behind” industrial machine designed to wash and dry floors in one pass. The machine is powered by on-board batteries. The machine is equipped with disc brushes, a controlled solution flow dosing system and a squeegee with blades integrated in the deck, which vacuums and dries the floor.

Service Manual Purpose and Field of Application

The Service Manual is a technical resource intended to help service technicians when carrying out maintenance and repairs on the SC351, to guarantee the best cleaning performance and a long working life for the machine.
Please read this manual carefully before performing any maintenance and repair procedure on the machine.

Other Reference Manuals

Model	Product Code	User Manual	Spare Parts List
Nilfisk Alto Scrubtec 337.2	9087343020	9099872000	9099873000
Clarke Vantage 14	9087345020	9099878000	

These manuals are available at:
- Local Nilfisk-Alto or Clarke retailer
- website: www.nilfisk-alto.com - www.clarke-us.com

Manufacturer PDF Provided by www.southeasternequipment.net

Conventions

Forward, backward, front, rear, left or right are intended with reference to the operator's position, that is to say in driving position.

Service and Spare Parts

Service and repairs must be performed only by authorised personnel or Nilfisk Alto / Clarke Service Centers. The authorised personnel is trained directly at the manufacturer's premises and has original spare parts and accessories.
Contact Nilfisk Alto / Clarke Retailer indicated below for service or to order spare parts and accessories, specifying the machine model and serial number.

(Apply Retailer label here)

Serial Number Label

The machine serial number and model name are marked on the plate (see the example to the side).
Product code and year of production are marked on the same plate.
This information is useful when requiring machine spare parts. Use the following table to write down the machine identification data.

P100771A

MACHINE model .....
PRODUCT number .....
MACHINE serial number .....

Manufacturer PDF Provided by www.southeasternequipment.net

Safety

The following symbols indicate potentially dangerous situations. Always read this information carefully and take all necessary precautions to safeguard people and property.

Visible Symbols on the Machine

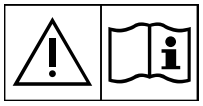

WARNING!
Carefully read all the instructions before performing any operation on the machine.

WARNING!
Do not wash the machine with direct or pressurized water jets.

WARNING!
Do not use the machine on slopes with a gradient exceeding the specifications.

Symbols

Danger! ***It indicates a dangerous situation with risk of death for the operator.***

Warning! ***It indicates a potential risk of injury for people or damage to objects.***

Caution! ***It indicates a caution related to important or useful functions.***

Note: *It indicates a remark related to important or useful functions.*

General Instructions

Specific warnings and cautions to inform about potential damages to people and machine are shown below.

Warning! ***Make sure to follow the safety precautions to avoid situations that may lead to serious injuries.***

- Before performing any cleaning, maintenance, repair or replacement procedure, turn the function selection knob to “0” and disconnect the battery connector.
- This machine must be used by properly trained operators only.
- Do not wear jewels when working near electrical components.
- Do not work under the lifted machine without supporting it with safety stands.
- Do not operate the machine near toxic, dangerous, flammable and/or explosive powders, liquids or vapours: This machine is not suitable for collecting dangerous powders.
- Keep the battery away from sparks, flames and incandescent material. During the normal operation explosive gases are released.
- Battery charging produces highly explosive hydrogen gas. Keep the cover open during battery charging and perform this procedure in well-ventilated areas and away from naked flames.

Manufacturer PDF Provided by www.southeasternequipment.net

Caution! ***Make sure to follow the safety precautions to avoid situations that may lead to serious injuries, damages to materials or equipments.***

- Carefully read all the instructions before performing any maintenance/repair procedure.
- Before using the battery charger, ensure that frequency and voltage values, indicated on the machine serial number plate, match the electrical mains voltage.
- Do not pull or carry the machine by the battery charger cable and never use the battery charger cable as a handle. Do not close a door on the battery charger cable, or pull the battery charger cable around sharp edges or corners. Do not run the machine on the battery charger cable.
- Keep the battery charger cable away from heated surfaces.
- Do not use the machine if the battery charger cable or plug is damaged. If the machine is not working as it should, has been damaged, left outdoors or dropped into water, return it to the Service Center.
- To reduce the risk of fire, electric shock, or injury, do not leave the machine unattended when it is plugged in. Before performing any maintenance procedure, disconnect the battery charger cable from the electrical mains.
- Do not smoke while charging the battery.
- Always protect the machine against the sun, rain and bad weather, both under operation and inactivity condition. Store the machine indoors, in a dry place: This machine must be used in dry conditions, it must not be used or kept outdoors in wet conditions.
- Before using the machine, close all doors and/or covers as shown in the User Manual.
- This machine is not intended for use by persons (including children) with reduced physical, sensory or mental capabilities, or lack of experience and knowledge, unless they have been given supervision or instruction concerning use of the machine by a person responsible for theyr safety.
- Children should be supervised to ensure that they do not play with the machine.
- Close attention is necessary when used near children.
- Use only as shown in this Manual. Use only Nilfisk Alto / Clarke recommended accessories.
- Check the machine carefully before each use, always check that all the components have been assembled before use. If the machine is not perfectly assembled it can cause damages to people and properties.
- Take all necessary precautions to prevent hair, jewels and loose clothes from being caught by the machine moving parts.
- Pay attention to the machine moving parts. When using the machine, the deck can abruptly turn by 180°.
- Do not use the machine on an incline.
- Do not tilt the machine more than the angle indicated on the machine itself, in order to prevent instability.
- Do not use the machine in particularly dusty areas.
- Use the machine only where a proper lighting is provided.
- While using this machine, take care not to cause damage to people or objects.
- Do not bump into shelves or scaffoldings, especially where there is a risk of falling objects.
- Do not lean liquid containers on the machine, use the relevant can holder.
- The machine operating temperature must be between +32°F and 104°F (0°C and +40°C).
- The machine storage temperature must be between +32°F and 104°F (0°C and +40°C).
- The humidity must be between 30% and 95%.

Manufacturer PDF Provided by www.southeasternequipment.net

- When using floor cleaning detergents, follow the instructions on the labels of the detergent bottles.
- To handle floor cleaning detergents, wear suitable gloves and protections.
- Do not use the machine as a means of transport.
- Do not allow the brush to operate while the machine is stationary to avoid damaging the floor.
- In case of fire, use a powder fire extinguisher, not a water one.
- Do not tamper with the machine safety guards and follow the ordinary maintenance instructions scrupulously.
- Do not allow any object to enter into the openings. Do not use the machine if the openings are clogged. Always keep the openings free from dust, hairs and any other foreign material which could reduce the air flow.
- Do not remove or modify the plates affixed to the machine.
- This machine cannot be used on roads or public streets.
- Pay attention during machine transportation when temperature is below freezing point. The water in the recovery tank or in the hoses could freeze and seriously damage the machine.
- Use brushes and pads supplied with the machine or those specified in the User Manual. Using other brushes or pads could reduce safety.
- In case of machine malfunctions, ensure that these are not due to lack of maintenance. If necessary, request assistance from the authorised personnel or from an authorised Service Center.
- If parts must be replaced, require ORIGINAL spare parts from an Authorised Dealer or Retailer.
- To ensure machine proper and safe operation, the scheduled maintenance shown in the relevant chapter of this Manual, must be performed by the authorised personnel or by an authorised Service Center.
- Do not wash the machine with direct or pressurised water jets, or with corrosive substances.
- The machine must be disposed of properly, because of the presence of toxic-harmful materials (battery, etc.), which are subject to standards that require disposal in special centres (see Scrapping chapter).

Machine Lifting

Warning! Do not work under the lifted machine without supporting it with safety stands.

Machine Transportation

Warning! Before transporting the machine, make sure that:

All covers are closed.

The battery is disconnected.

The machine is securely fastened to the means of transport.

Manufacturer PDF Provided by www.southeasternequipment.net

Machine Nomenclature (know your machine)

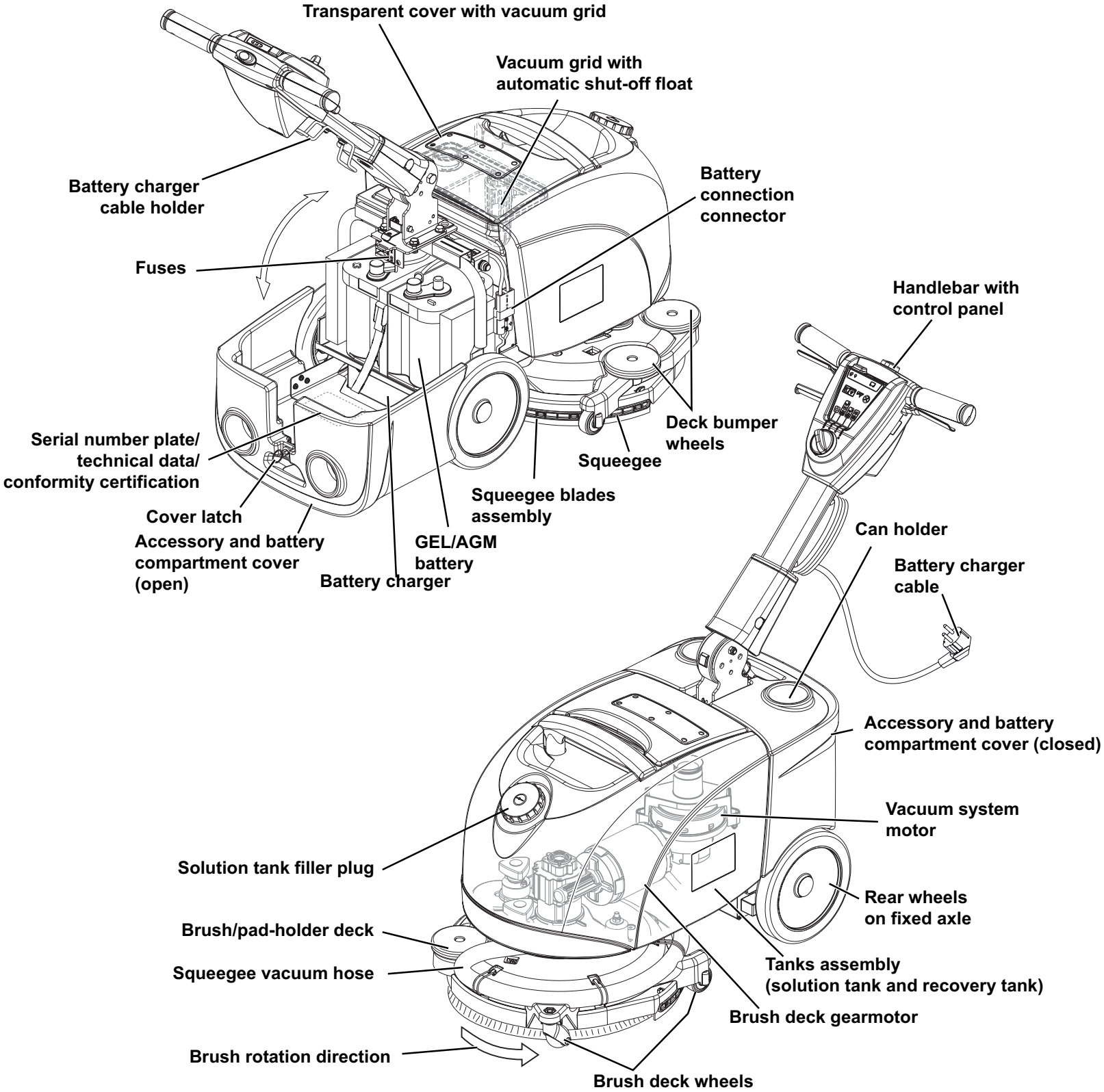

P100772A

Manufacturer PDF Provided by www.southeasternequipment.net

Control Panel

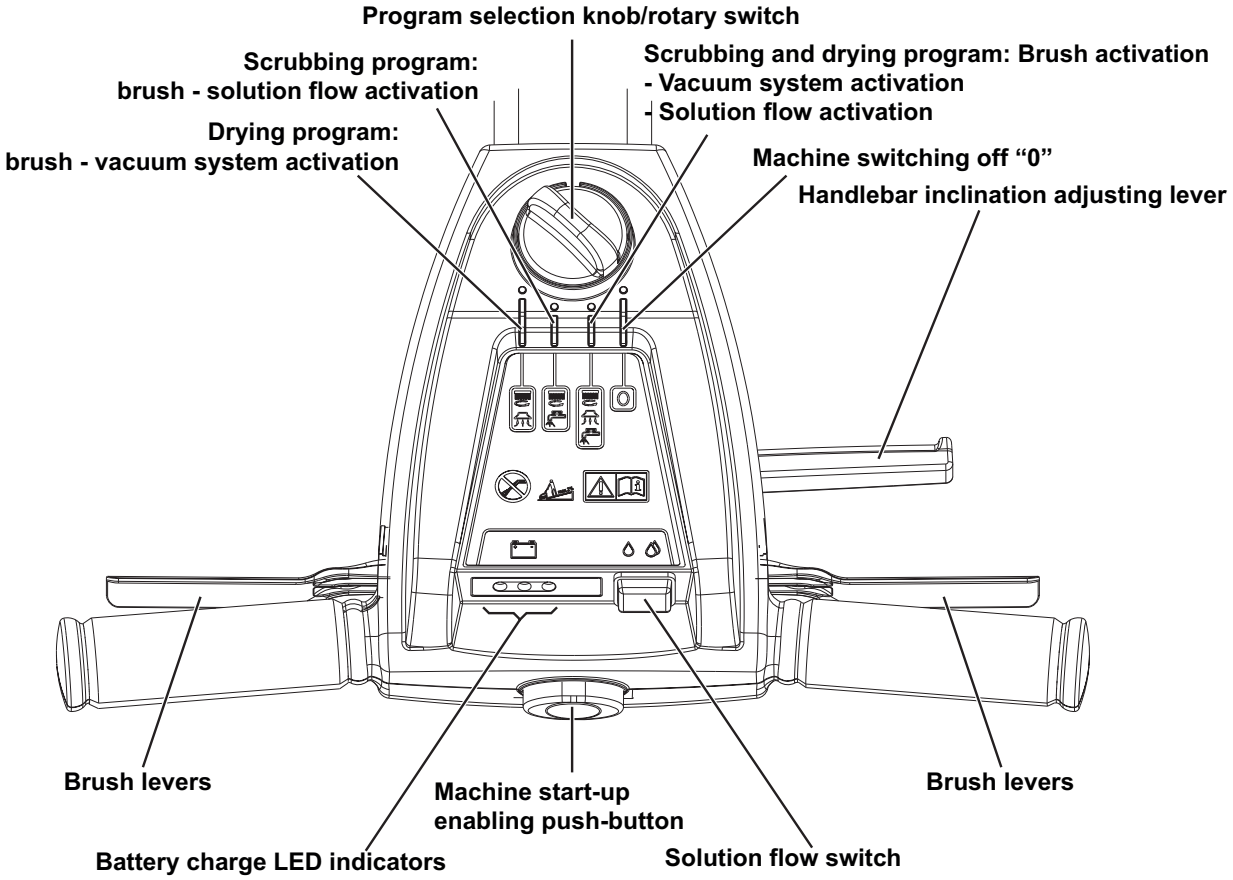

P100773A

Manufacturer PDF Provided by www.southeasternequipment.net

Service and Diagnostic Equipment

Besides a complete set of standard meters, the following instruments are necessary to perform fast checks and repairs on Nilfisk Alto / Clarke machines:

- Laptop computer charged with the current version of EzParts, Adobe Reader and (if possible) Internet connection
- Digital Volt Meter (DVM)
- Amp clamp with possibility of making DC measurements
- Hydrometer
- Battery charge tester to check 12 V batteries
- Static control wrist strap
- Dynamometric wrench set
- A copy of the User Manual and Spare Parts List of the machine to be serviced (provided with the machine or available at www.advance-us.com or other Nilfisk Alto / Clarke websites).

The following equipment is also available at Nilfisk Alto / Clarke Centers:

- Vacuum water lift gauge, P/N 56205281

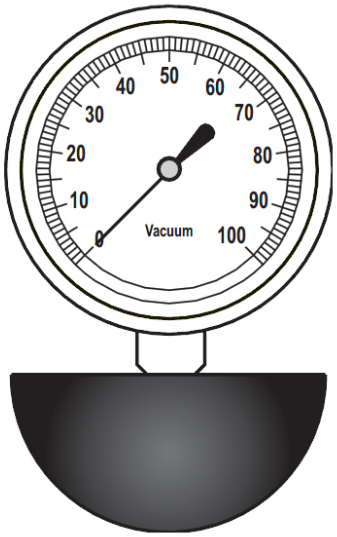

Manufacturer PDF Provided by www.southeasternequipment.net

Technical Data

Description	Nilfisk Alto SCRUBTEC 337.2	Clarke VANTAGE 14
Solution tank capacity	2.9 USgal (11 litres)	
Recovery tank capacity	3.2 USgal (12 litres)	
Min/max machine length at the handlebar	31.5 in / 50 in (800 / 1 270 mm)	
Machine width	18.7 in (475 mm)	
Min/max machine height with adjustable handlebar	23.6 / 43.8 in (600 / 1 115 mm)	
Body machine dimension	28.6 x 17 x 19.3 in (726 x 432 x 490 mm)	
Minimum turning radius	21.6 in (550 mm)	
Cleaning width	14.5 in (370 mm)	
Diameter of wheels on fixed axle	8.4 in (214 mm)	
Wheel pressure on the floor (*)	87 psi (0,6 N/mm^2)	
Brush/pad diameter	14.5 in (370 mm)	
Brush/pad pressure on the floor	46 lb (21 Kg)	
Brush/pad pressure with full tank	66 lb (30 Kg)	
Min/max solution flow	One drop: 0.066 gpm (0.25 litres/min) Two drops: 0.13 gpm (0.5 litres/min)	
Sound pressure level at workstation (ISO 11201, ISO 4871, EN 60335-2-72) (LpA)	64 ± 3 dB(A)	
Machine sound pressure level (ISO 3744, ISO 4871, EN 60335-2-72) (LwA)	84 dB(A)	
Vibration level at the operator's arms (ISO 5349-1, EN 60335-2-72)	98.4 in/s^2 (< 2.5 m/s^2)	
Maximum gradient when working	2%	
IP protection class	X4	
Protection class (electric)	III	
Vacuum system motor power	0.27 hp (200 W)	
Vacuuming (with closed inlet)	27.7 in/H_2O (710 mmH_2O)	
Brush motor power	0.35 hp (260 W)	
Brush motor speed	140 rpm	
Total absorbed power	42 A (0.5 kW)	
Battery compartment size	17.8 x 6.9 x 9.4 in (350 x 175 x 240 mm)	
Battery voltage	12 V	
Standard battery	12V 55AhC20 AGM spiracell	12V 84AhC5 AGM
Battery charger	100-240 VAC	
Work autonomy (standard battery)	2 hour	1 hour
Weight without battery and with empty tanks	97 lb (44 kg)	
Gross vehicle weight (GVW)	179 lb (81 kg)	
Shipping weight	159 lb (72 kg)	172 lb (78 kg)

(*) Machines have been tested under the following conditions:
- Battery maximum size
- Maximum brush and squeegee size
- Full clean water tank
- Optional equipment installed
- Wheel weight checked
- Print on the floor checked on cement for each single wheel
- Result expressed as maximum value for both front and rear wheels

Manufacturer PDF Provided by www.southeasternequipment.net

Dimensions

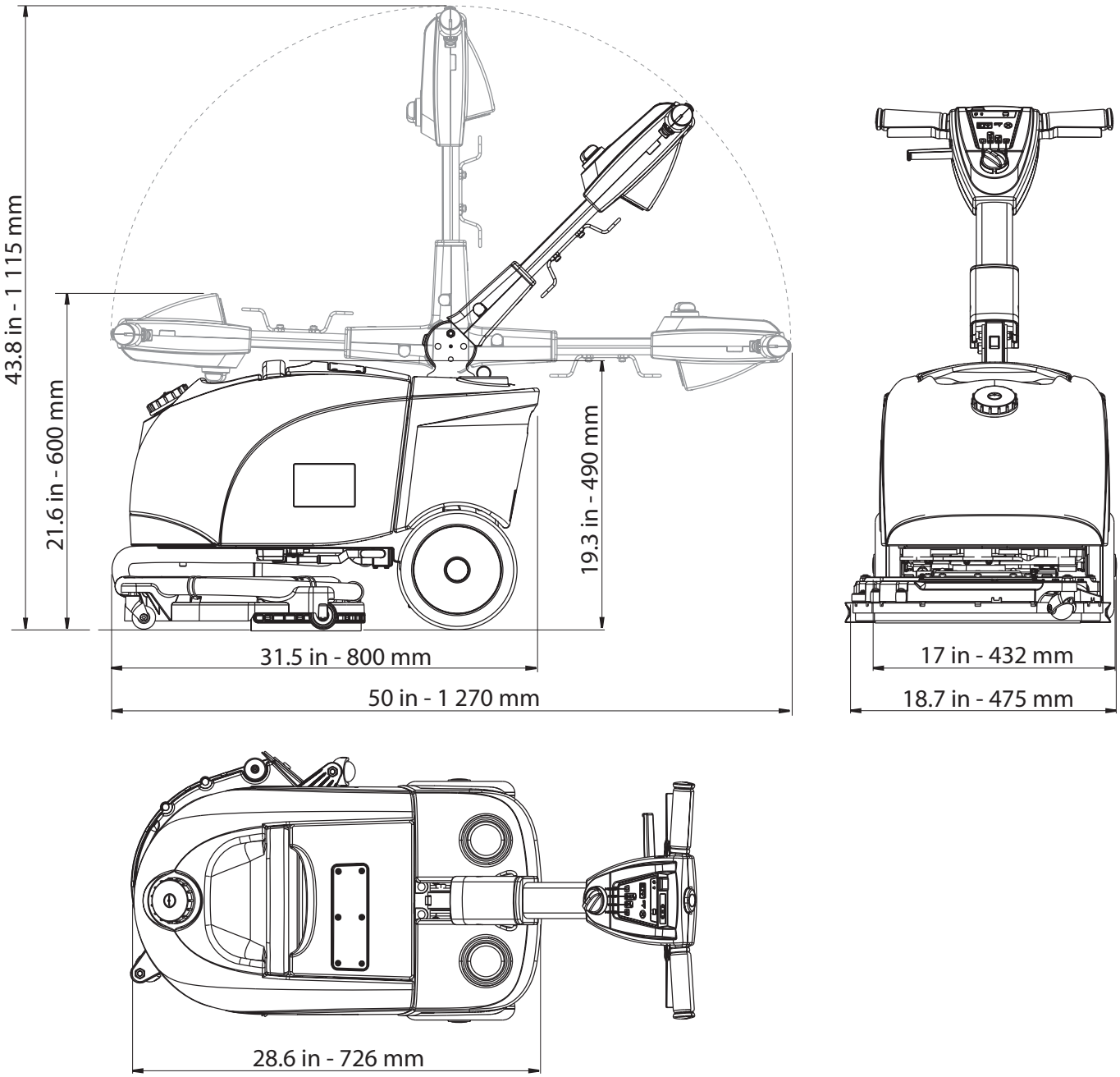

P100774A

Manufacturer PDF Provided by www.southeasternequipment.net

Maintenance

The lifespan of the machine and its maximum operating safety are ensured by correct and regular maintenance.

Warning! ***Read carefully the instructions in the Safety chapter before performing any maintenance procedure.***

The following tables provides the scheduled maintenance. The intervals shown may vary according to particular working conditions, which are to be defined by the person in charge of the maintenance.
For instructions on maintenance procedures, see the following paragraphs.

Scheduled Maintenance Table

Procedure	Daily, after using the machine	Weekly	Every six months	Yearly
Battery charging	■			
Squeegee Cleaning	■			
Brush Cleaning	■			
Tank and Vacuum Grid Cleaning	■			
Squeegee blade check and/or replacement		■		
Solution valve check and cleaning			■	
Brush deck rotation clutch check and/or replacement (Only for Clarke Vantage 14)				■

Manufacturer PDF Provided by www.southeasternequipment.net

Chassis System

Frame (main parts)

1. Frame
2. Handlebar holder
3. Wheels on fixed axle

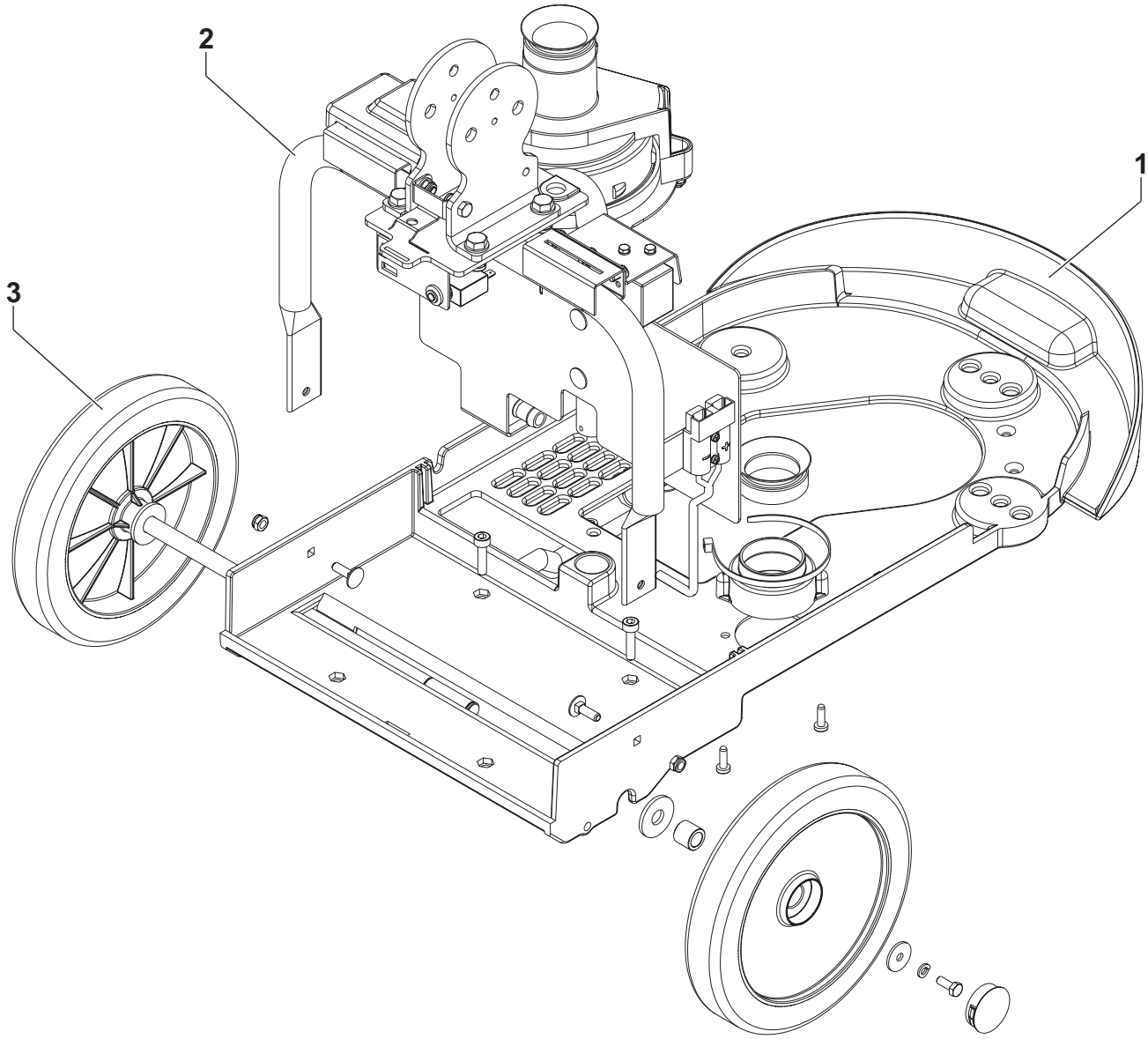

P100775

Manufacturer PDF Provided by www.southeasternequipment.net

Control System

Functional Description

The function control is performed with the program selection knob/rotary switch (SW1), the machine start-up enabling push-button (SW2) (which can be used simultaneously with the brush levers) and the solution flow switch (SW3).
The switch outputs controls the relevant outputs: relay (K1) for brush motor, relay (K2) for vacuum system motor, solenoid valve (EV).
The control circuit are protected by the fuse (F3).
The negative output of the battery charger (B2) allows function activation when battery level is sufficient and the battery charger is not connected to the electrical mains.

The LED electronic board (EB1) is equipped with 3 LEDs which indicate the battery charge level, both during operation and while recharging:

Battery charge level LED display		
	● ○ ○	
	○ ● ○	
	○ ○ ●	

Diagram of Output Activation according to the Position of the Switches (SW1), (SW2) and (SW3)

Program selection knob/ rotary switch (SW1) settings	Machine start-up enabling push-button (SW2) settings (with brush activation levers)	Brush motor (M1)	Solenoid valve (EV)	Vacuum system motor (M2)
O	Pressed/released	Off	Off	Off
	Released	Off	Off	On
	Pressed	On	On	On
	Released	Off	Off	Off
	Pressed	On	On	Off
	Released/	Off	Off	On
	Pressed	On	Off	On

Solution flow push-button setting (SW3)	Symbols	Solenoid valve ON time (EV)	Solenoid valve OFF time (EV)
0		2 sec	2 sec
1		Always ON	-

Manufacturer PDF Provided by www.southeasternequipment.net

Component Locations

- Handlebar with control panel
- Program selection knob/rotary switch (SW1)
- LED electronic board (EB1)
- Brush levers
- Machine start-up enabling push-button (SW2)
- Solution flow push-button (SW3)
- Wiring harness
- Handlebar inclination adjusting lever

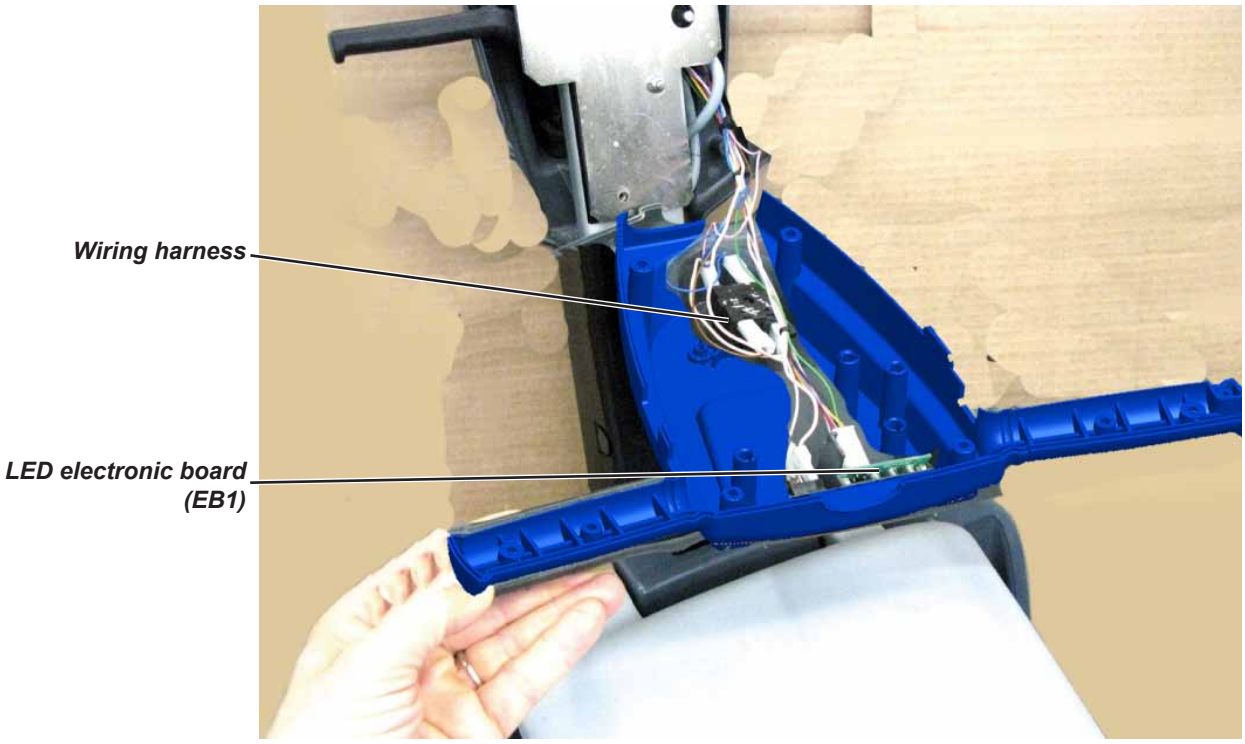

P100777A

Manufacturer PDF Provided by www.southeasternequipment.net

Removal and Installation

LED Electronic Board (EB1) Disassembly/Assembly

Disassembly

1. Drive the machine on a level floor. Make sure that the machine cannot move independently.
2. Turn the machine program selection knob to “0”.
3. Disconnect the battery connector.
4. On the lower side of the handlebar with the control panel, unscrew the screws (A).
5. Lower the upper side (B) of the handlebar with the control panel.
6. Disconnect the connector (C) of the LED electronic board (D). Remove the screws (E) and remove the LED electronic board (D).
7. If necessary, disconnect the connector (F) and remove the solution flow push-button (G) by disengaging the inner tabs (H).

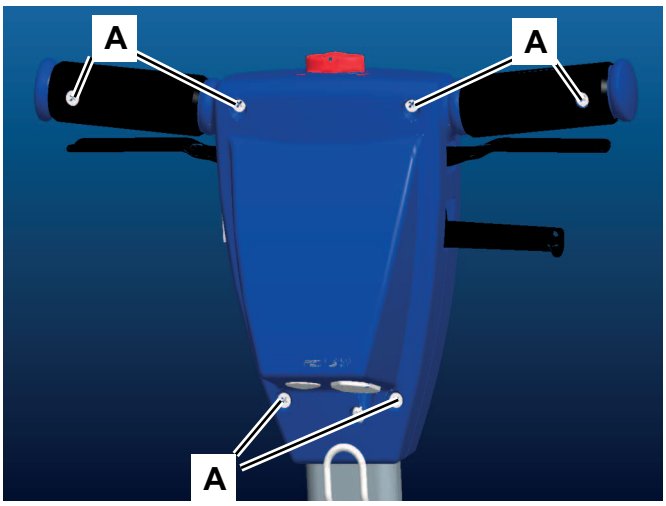

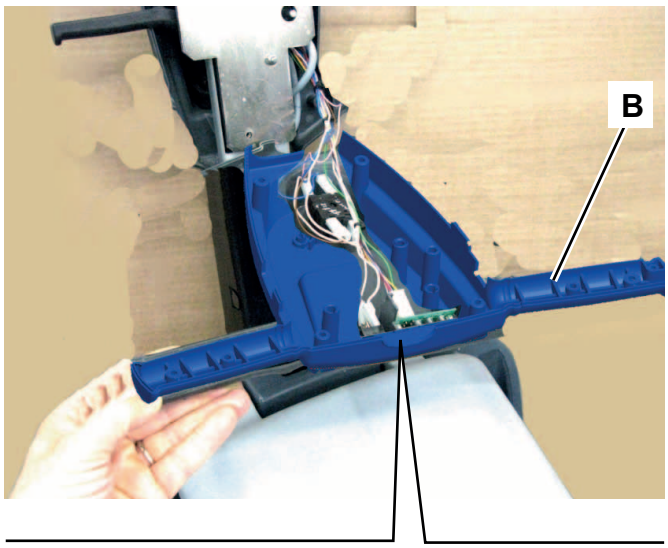

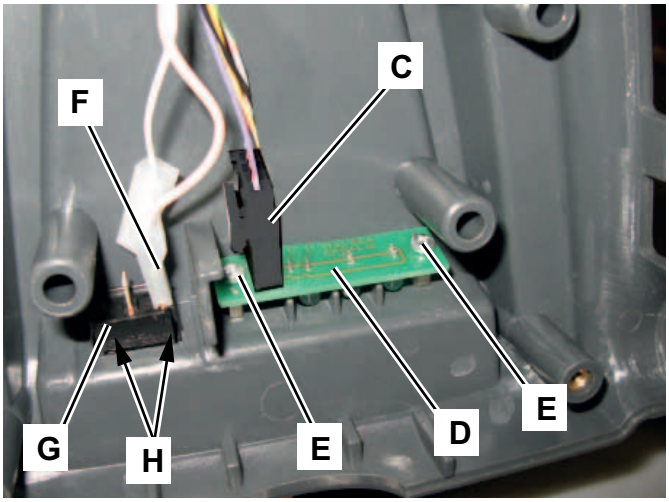

P100778A

Manufacturer PDF Provided by www.southeasternequipment.net

LED Electronic Board (EB1) Disassembly/Assembly (Continues)

8. If necessary, remove the selector assembly (N) of the machine program selection knob (I), as shown below:
   - Disconnect the connectors (J)
   - On the outer side, turn the knob (I) on the position (K) (vacuum system activation).
   - Loosen the threaded dowel inside the housing (L), then remove the knob (I) from the housing.
   - Remove the screws (M) and, from the inside, remove the selector assembly (N) of the knob (I).

Assembly

9. Assemble the components in the reverse order of disassembly.

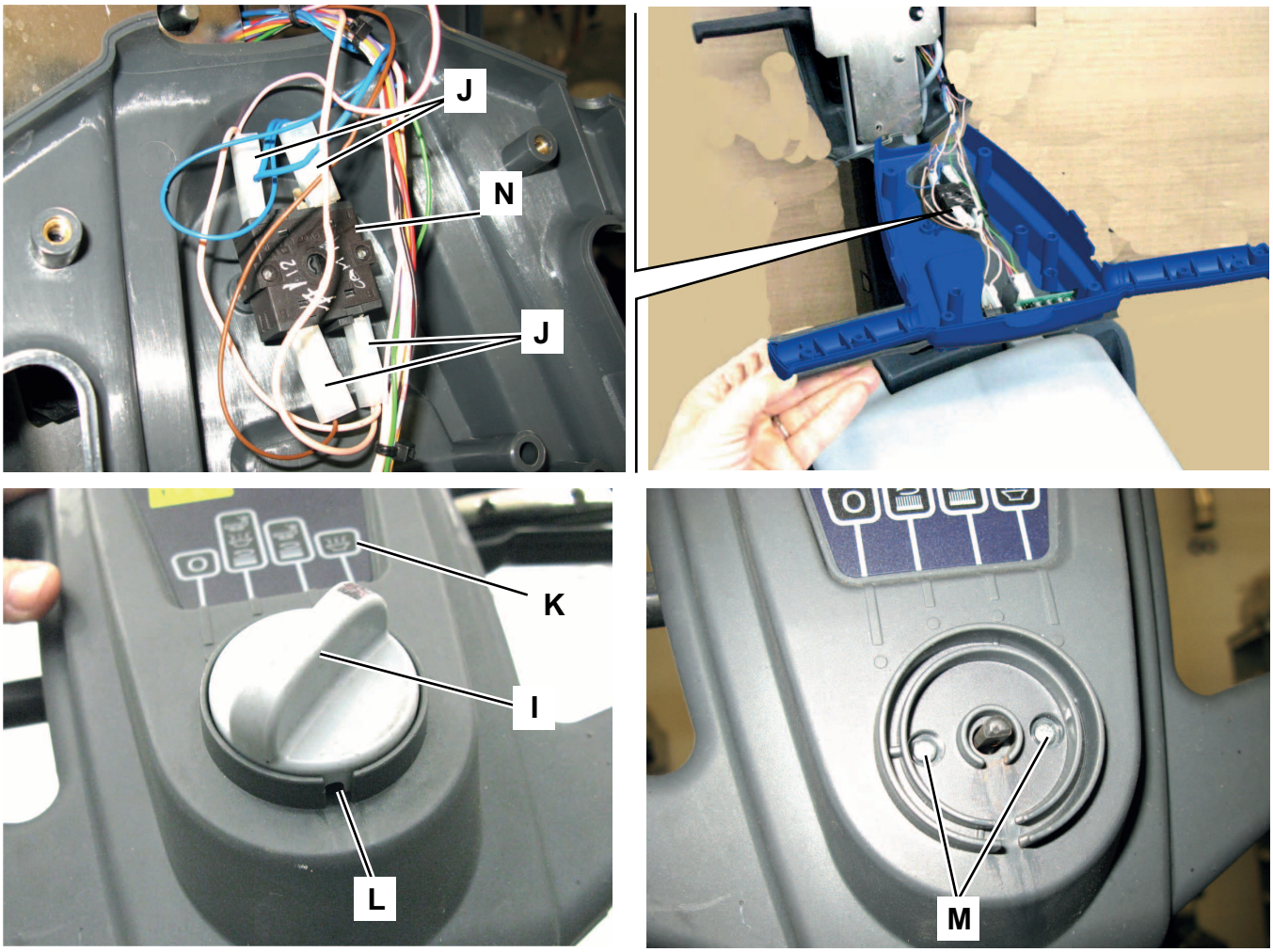

P100779A

Manufacturer PDF Provided by www.southeasternequipment.net

Machine Enabling Push-Button Disassembly/Assembly (SW2)

Disassembly

1. Drive the machine on a level floor. Make sure that the machine cannot move independently.
2. Turn the machine program selection knob to “0”.
3. Disconnect the battery connector (red).
4. On the lower side of the handlebar with the control panel, unscrew the screws (A).
5. Move the upper side (B) of the handlebar with the control panel.
6. Remove the screws (C) and move the lower side (D) of the handlebar from the frame (E).
7. Disconnect the connectors (F) of the brush enabling push-button (G).
8. Remove the screws (H) and remove the switch (G).
9. If necessary, remove from the housing the enabling push-button (I) of the switch (G).
10. If necessary, remove the brush levers (J) from the housing.

Assembly

11. Assemble the components in the reverse order of disassembly.

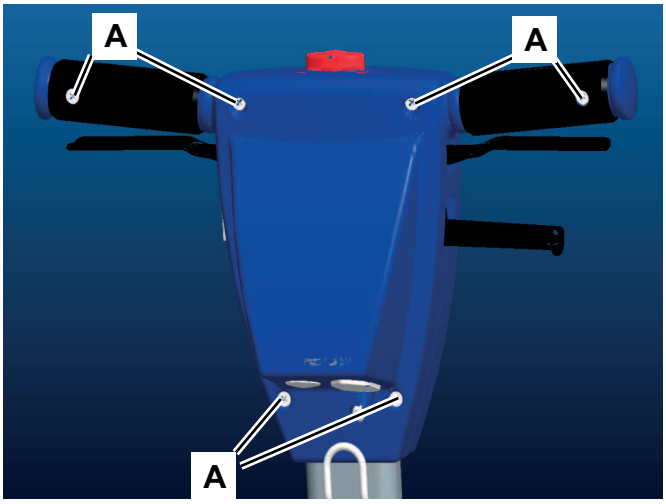

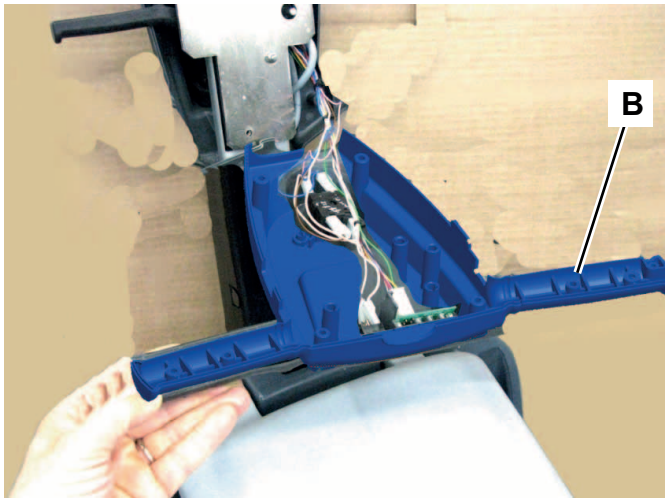

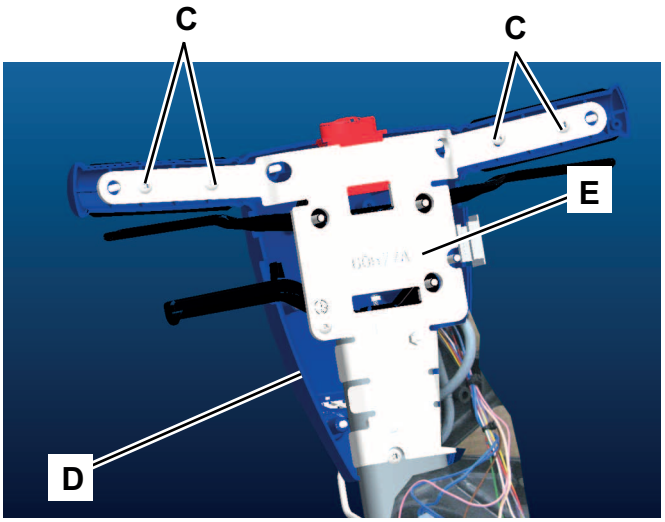

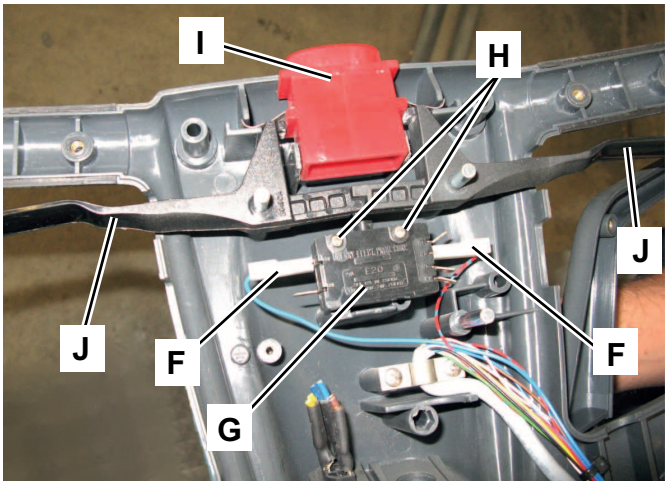

P100780A

Manufacturer PDF Provided by www.southeasternequipment.net

Specifications

LED electronic board connector (EB1)

JA: 4-way vertical Tyco Modu II type

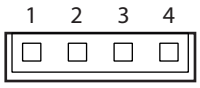

PIN	Description	Electronic board in/out	V ref.	I max.
1	Common cathode LED power supply	in	0 V	<1 A
2	RED anode LED power supply	in	0.7 V	<1 A
3	YELLOW anode LED power supply	in	0.7 V	<1 A
4	GREEN anode LED power supply	in	0.7 V	<1 A

Manufacturer PDF Provided by www.southeasternequipment.net

Electrical System

Functional Description

The program selection knob/rotary switch (SW1) and the machine start-up enabling push-button (SW2) controls the vacuum brush motor relay (K1) for the activation of the brush motor (M1) and the vacuum system motor relay (K2) for the activation of the vacuum system motor (M2).
The solenoid valve (EV) is controlled by the solenoid valve timer relay (KT1) when the solution flow switch (SW3) is turned to 0 (minimum flow); the timer is bypassed when the solution flow switch (SW3) is turned to 1 (maximum flow).
The battery charger (CH) supplies negative power to all the control relays only when the battery charge is sufficient and the battery charger is not connected to the electrical mains.
The machine system is connected to the battery with the connector (C1).

Fuses

The brush motor (M1) is protected by the brush motor fuse (F1). The vacuum system motor (M2) is protected by the vacuum system motor fuse (F2). The solenoid valve (EV) is protected by the function selector fuse (F3). The battery charger (CH) has inner safety protections which are not accessible.

Wiring Diagram

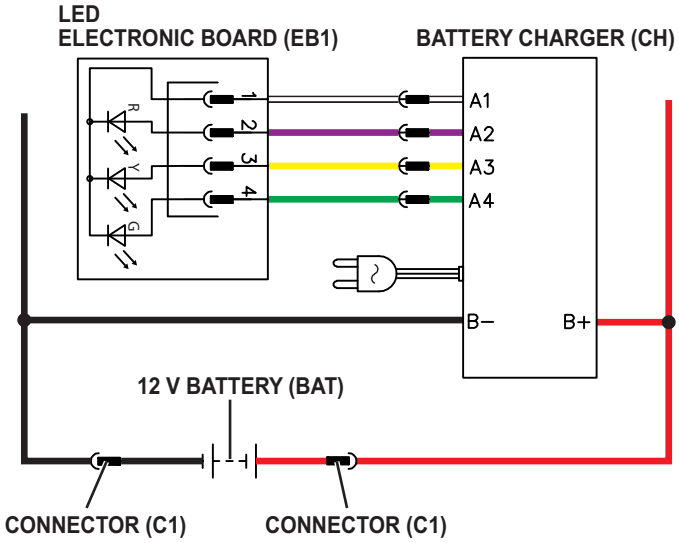

P100781

Manufacturer PDF Provided by www.southeasternequipment.net

Component Locations

- Battery charger (CH)
- 12V Battery (BAT)
- Connector (C1)
- Battery wiring harness
- Machine wiring harness
- Brush motor fuse (F1)
- Vacuum system motor fuse (F2)
- Function selector fuse (F3)
- Brush motor relay (K1)
- Solenoid valve timer relay (KT1)
- Vacuum system motor relay (K2)

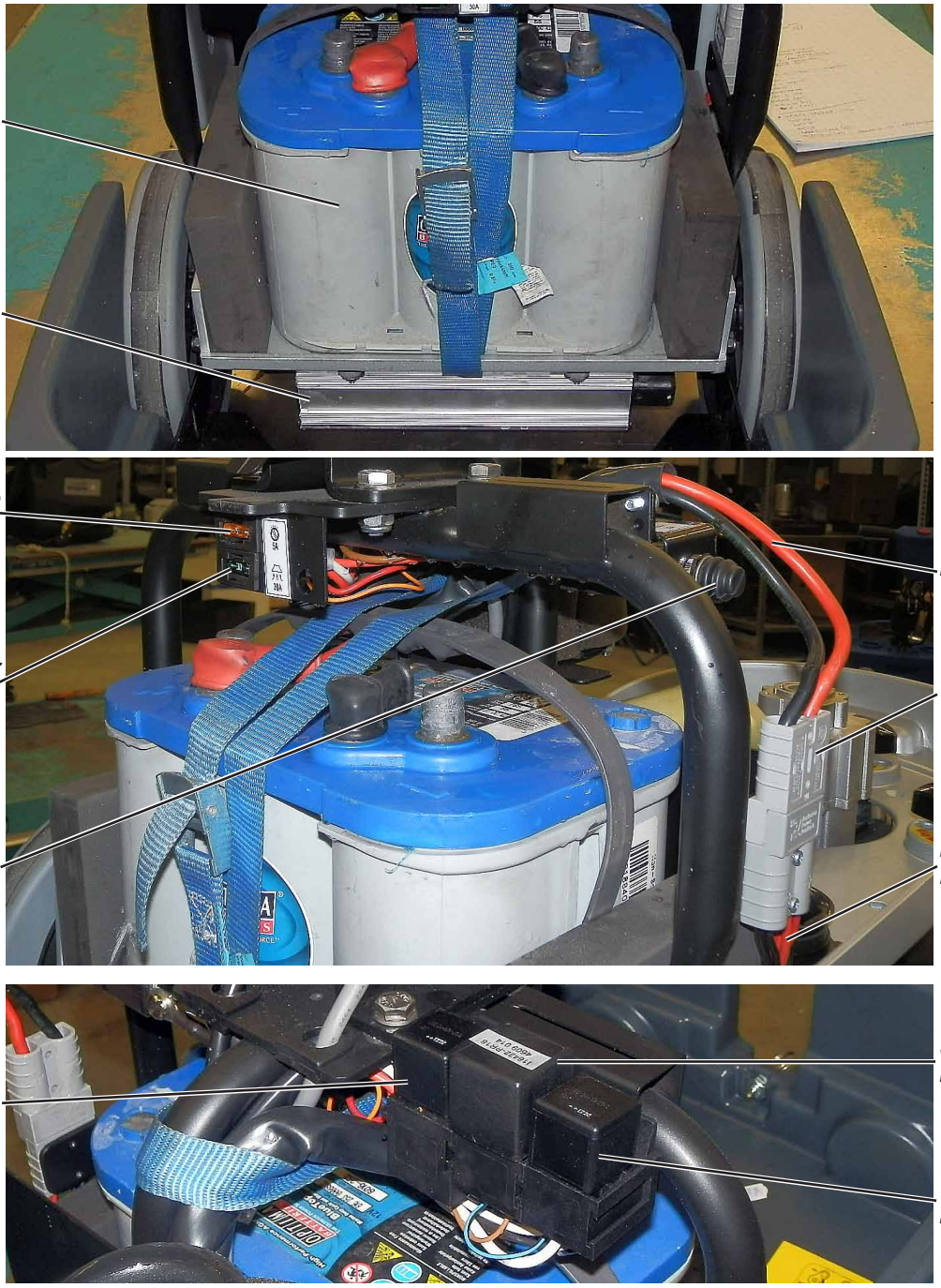

P100782

Manufacturer PDF Provided by www.southeasternequipment.net

Maintenance and Adjustments

Battery Installation

1. Open the cover and check that the battery connector is disconnected.
2. Install the battery on the machine, connect the terminals and fasten it with the relevant belt.

Warning! ***This machine requires sealed lead batteries (GEL or AGM technology). Do not use batteries with liquid electrolyte or not sealed (WET) for any reason.***

Warning! ***Pay special attention when connecting the battery pins. The red cable must be connected to the positive pin (+), the black cable must be connected to the negative pin (-) of the battery. A wrong connection can damage the battery charger.***

Warning! ***The installed battery (GEL/AGM) may require a specific charging algorithm: See the Battery Charger Setting and Dipswitch Configuration paragraph to set the proper charging algorithm for the installed battery.***

3. Connect the battery connector and close the cover.
4. Charge the battery.

Battery charging

Note: *Charge the batteries when the yellow or red LED turns on, or at the end of each working cycle. Keeping the batteries charged make their life last longer.*

Caution! ***When the battery is discharged, charge is as soon as possible, as that condition makes its life shorter. Check for battery charge at least once a week.***

1. Drive the machine on a level floor.
2. Check that the function selection knob is turned to “0”.
3. Connect the battery charger cable to the electrical mains (the electrical mains voltage and frequency must be compatible with the battery charger values shown on the machine serial number plate).

Note: *When the battery charger is connected to the electrical mains, all machine functions are automatically cut off. The red or yellow warning light (37) is on when the battery charger is charging the batteries.*

4. When the green warning LED stays on, the battery charging cycle is over.
5. When the battery charging is completed, disconnect the battery charger cable from the electrical mains and wind it round its housing.
6. Now the machine is ready to be used.

Note: *For further information about the operation of the battery charger, see the relevant Manual attached.*

Manufacturer PDF Provided by www.southeasternequipment.net

Battery Charger Setting and Dipswitch Configuration

To change the dipswitch configuration, remove the round white cap near the openings (see the illustration below), with a screwdriver.

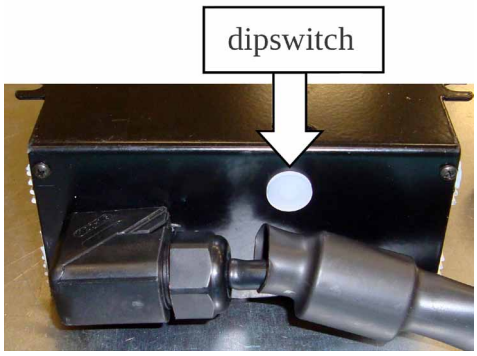

P100782

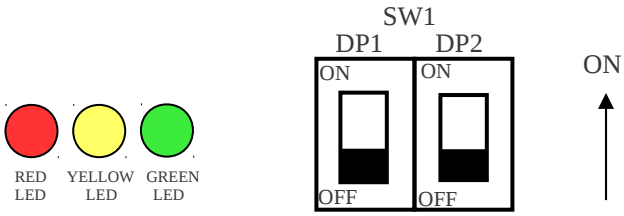

P100783

SW1		LED CODES (*)	CHARGING CURVES
DP1	**DP2**	**BATTERY CHARGING LEDS (on the control panel)**	
ON	ON	2 flashes of the GREEN LED	Charging algorithm for generic Gel and AGM battery
ON	OFF	2 flashes of the RED and GREEN LEDS	Charging algorithm for AGM DISCOVER battery (**default for Clarke model**)
OFF	ON	2 flashes of the YELLOW and GREEN LEDS	Charging algorithm for OPTIMA battery (**default for Nilfisk Alto model**)
OFF	OFF	2 flashes of the YELLOW LED	Charging algorithm for EXIDE SONNENSCHEIN Gel battery

(*) The LED codes are shown by the battery charge indicators each time that the battery charger is turned on, before the charging cycle starts.

Battery Charger Auxiliary Functions

The battery charger is also used to:

7. Check the battery voltage during machine operation.
8. Display the battery charge level with the led electronic board (EB1).
9. Stop the machine operation when the battery is discharged (10.8 V).
10. Disable the machine operation during battery recharging.

For this reason, the following battery charger auxiliary contacts are used:
- B1: (ref. + 12 V) Enabling input for machine start-up.
- B2: (ref. 0 V) Output for machine function activation.

Manufacturer PDF Provided by www.southeasternequipment.net

Fuse Check and Replacement

Fuses in the electric component box

1. Drive the machine on a level floor.
2. Check that the function selection knob is turned to “0” and disconnect the battery connector.
3. Open the cover and check one of the following fuses for deactivation or integrity:
   - (A): brush motor fuse circuit breaker (F1) 35 A.
   - (B): vacuum system motor blade fuse (F2) 30 A.
   - (C): function selector blade fuse (F3) 5 A.
4. Reset or replace any fuse, after having checked and repaired any problem that caused deactivation.
5. Close the cover.

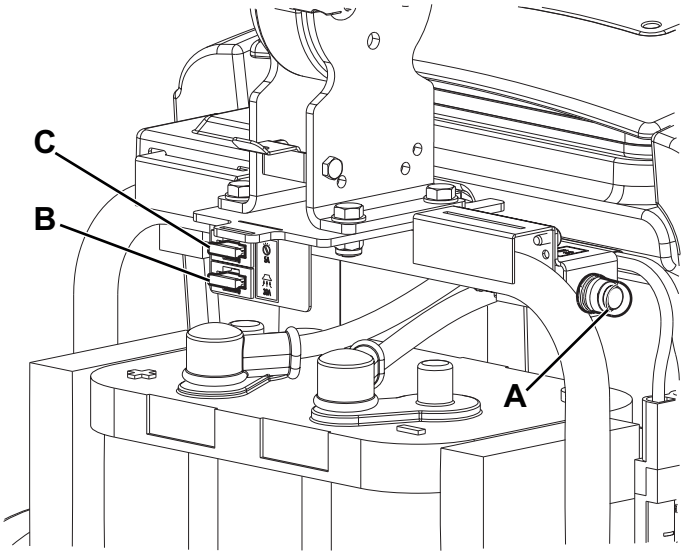

P100784

Manufacturer PDF Provided by www.southeasternequipment.net

Deep discharged battery (only for Optima battery type 4.2 - Spiralcell)

The discharge of the battery through normal use of the machine is stopped when the voltage reaches 10,8V (see the Battery Charger Auxiliary Functions paragraph).
However, if the battery is left in these conditions for a long period of time, or in case of failure of the battery, the voltage (*) may fall below this value.
If the open circuit voltage of the battery falls below the value of 10.5V, then it can no longer be recharged by the charger on board.
The battery charger indicates this error when connecting to the network by turning on all 3 LED lights steadily, and does not start the charging cycle.
In this case the battery is considered deep discharged permanent and cannot in any case fully recover its functionality and durability.
The best solution is therefore to replace it.

If attempt to recover the capacity, even partially, a standalone charger must be used.

To perform the recovery recharge, remove the battery from the machine and connect it to a suitable charger with the following characteristics:

- Battery-charger electronic
- Charging curve for generic batteries GEL / AGM or specific OPTIMA batteries
- Rated output voltage : 12V
- Rated output current : 5 to 10 Amperes

Danger! ***Perform the recovery charge exclusively with battery removed from the machine and under the constant supervision of qualified personnel, in a well-ventilated area.***

Danger! ***The battery may indeed have suffered substantial damage and overheat during this charging. Never leave the battery unattended to be charged in these circumstances.***

Danger! ***In case of abnormal heating during recovery charge of the battery [surface temperature >122° F (>50°C)] or the smoke or smell, immediately stop charging the battery and scrap it.***

Once the recovery recharge completed it's possible to re-install the battery on the machine and test its functionality.

(*) For no-load voltage of the battery means voltage measured with a multimeter when the battery is disconnected from any load for at least a few minutes.

Manufacturer PDF Provided by www.southeasternequipment.net

Troubleshooting

Trouble	Possible Causes	Remedy
The machine is not working; no LED turns on.	The battery connector (C1) is not connected or broken	Connect or replace it
	The 12V battery (BAT) is completely discharged	Try to the battery functionality recover or replace it (see the Deep discharged battery paragraph)
	The 12V battery (BAT) is broken	Check the battery no-load voltage
	The battery charger (CH) is broken	Replace
	The function selector fuse (F3) is open	Replace
	The wiring harness is cut or pressed or short circuited	Repair
	The program selection knob/rotary switch (SW1) is not working	Replace
	The battery has been connected with inverted polarity	Replace the battery charger
By connecting the battery charger to the power supply all 3 LEDs on the handlebar are on with a steady light and it is not charging the battery.	12V battery (BAT) damaged or heavy discharged	Try to the battery functionality recover or replace it (see the Deep discharged battery paragraph)
By connecting the battery charger to the power supply the yellow LED on the handlebar is flashing and it is not charging the battery	12V battery (BAT) not correctly connected to the wiring system	Verify the battery connections
By connecting the battery charger to the power supply the red LED on the handlebar is flashing and it is not charging the battery	Internal battery charger damage	Replace
At the end of the battery charging phase the red LED on the handlebar is flashing	The battery charger was not able to charge completely the battery within the maximum time allowed	Try to repeate the charging. If the problem still occurs replace the battery

Manufacturer PDF Provided by www.southeasternequipment.net

General Wiring Diagram

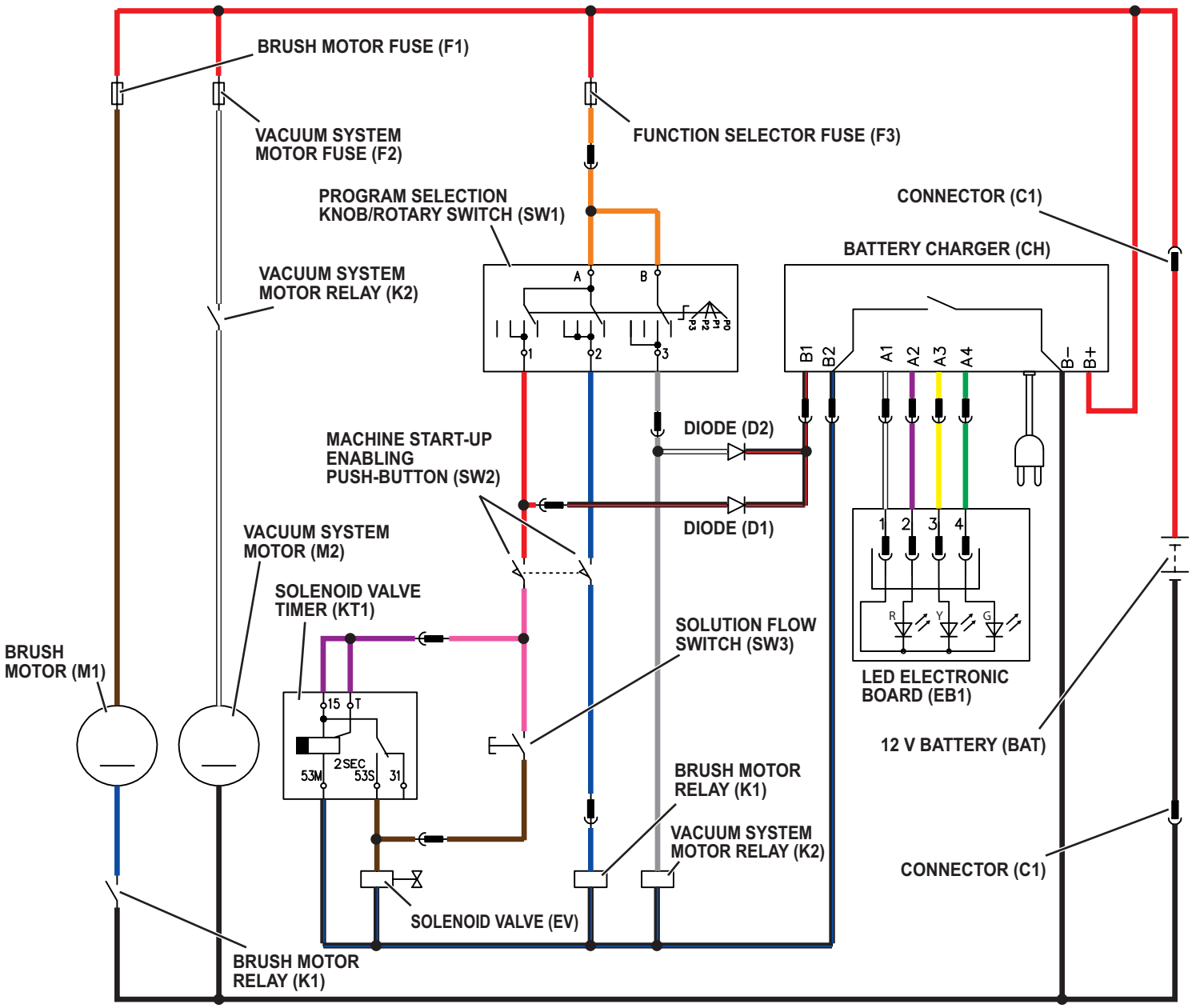

P100785

Manufacturer PDF Provided by www.southeasternequipment.net

Specifications

Description	Nilfisk Alto SCRUBTEC 337.2	Clarke VANTAGE 14
Total absorbed power	42 A (0.5 kW)	
Battery compartment size	17.8x6.9x9.4 in (350x175x240 mm)	
Battery voltage	12 V	
Standard batteries	12V 55AhC20 AGM spiralcell	12V 84AhC5 AGM
Battery charger	100-240 VAC	
Work autonomy (standard batteries)	2 hour	1 hour

Manufacturer PDF Provided by www.southeasternequipment.net

Recovery System

Functional Description

The water recovery system removes the dirty water from the floor and pipes it to a recovery tank. When the machine is running, the dirty water on the floor is collected by the squeegee blades and collected through the slots in the same, piped through the vacuum hose and into the tank by the airflow created by vacuum motor (M2). The dirty water is piped into the recovery tank, while the airflow continues to the vacuum fan.
The vacuum system motor (M2) is supplied by the vacuum system motor relay (K2) which is driven by the program selection knob/rotary switch (SW1) when it is turned to 1 or 3. The circuit is protected by the vacuum system motor fuse (F2).
The automatic float in the vacuum grid stops vacuum system motor (M2) from collecting any liquids.
When the automatic float closes and shuts down the vacuum system, the vacuum system motor noise will increase and the floor will not be dried.
When the recovery tank is full it must be emptied.

Wiring Diagram

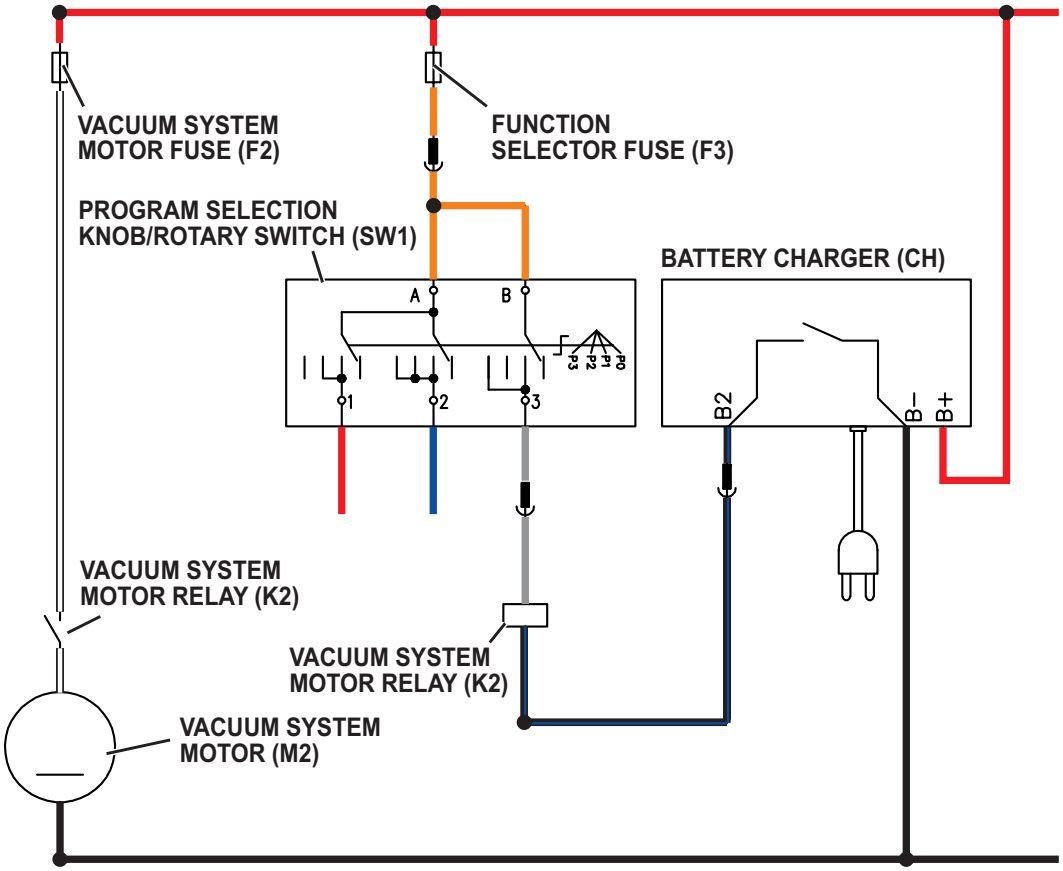

P100786

Manufacturer PDF Provided by www.southeasternequipment.net

Component Locations

- Recovery tank
- Vacuum system/tank connection gasket
- Squeegee vacuum hose
- Vacuum system motor (M2)

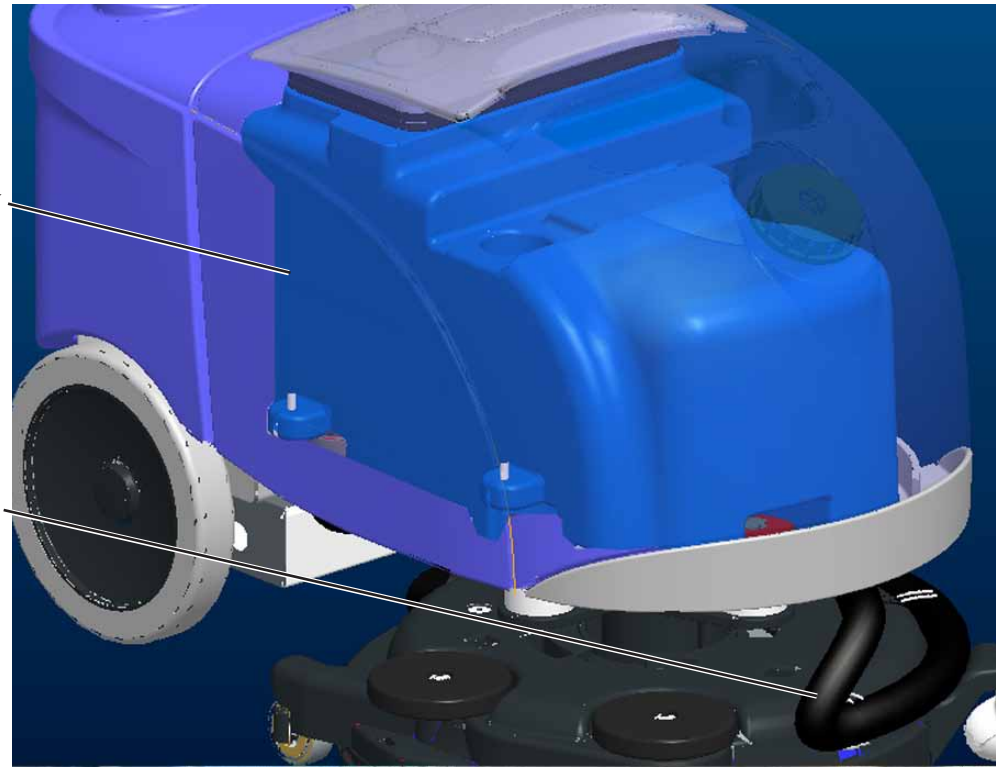

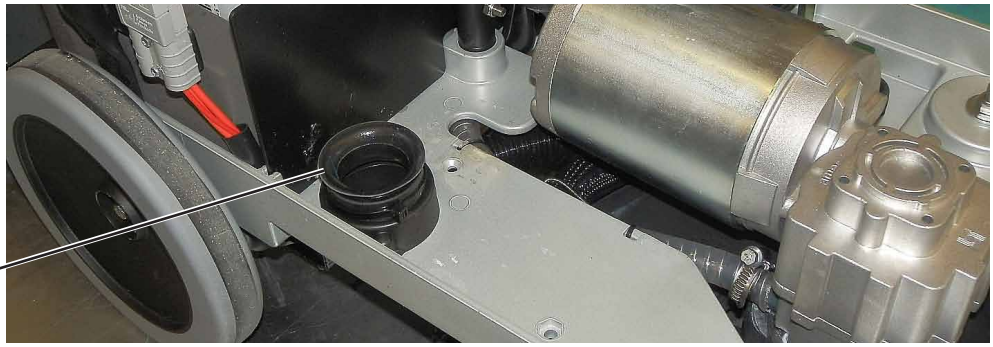

P100787A

Manufacturer PDF Provided by www.southeasternequipment.net

Component Locations (Continues)

- Transparent cover
- Vacuum grid with automatic shut-off float
- Cover gasket
- Vacuum system motor fuse (F2)
- Vacuum system relay (K2)

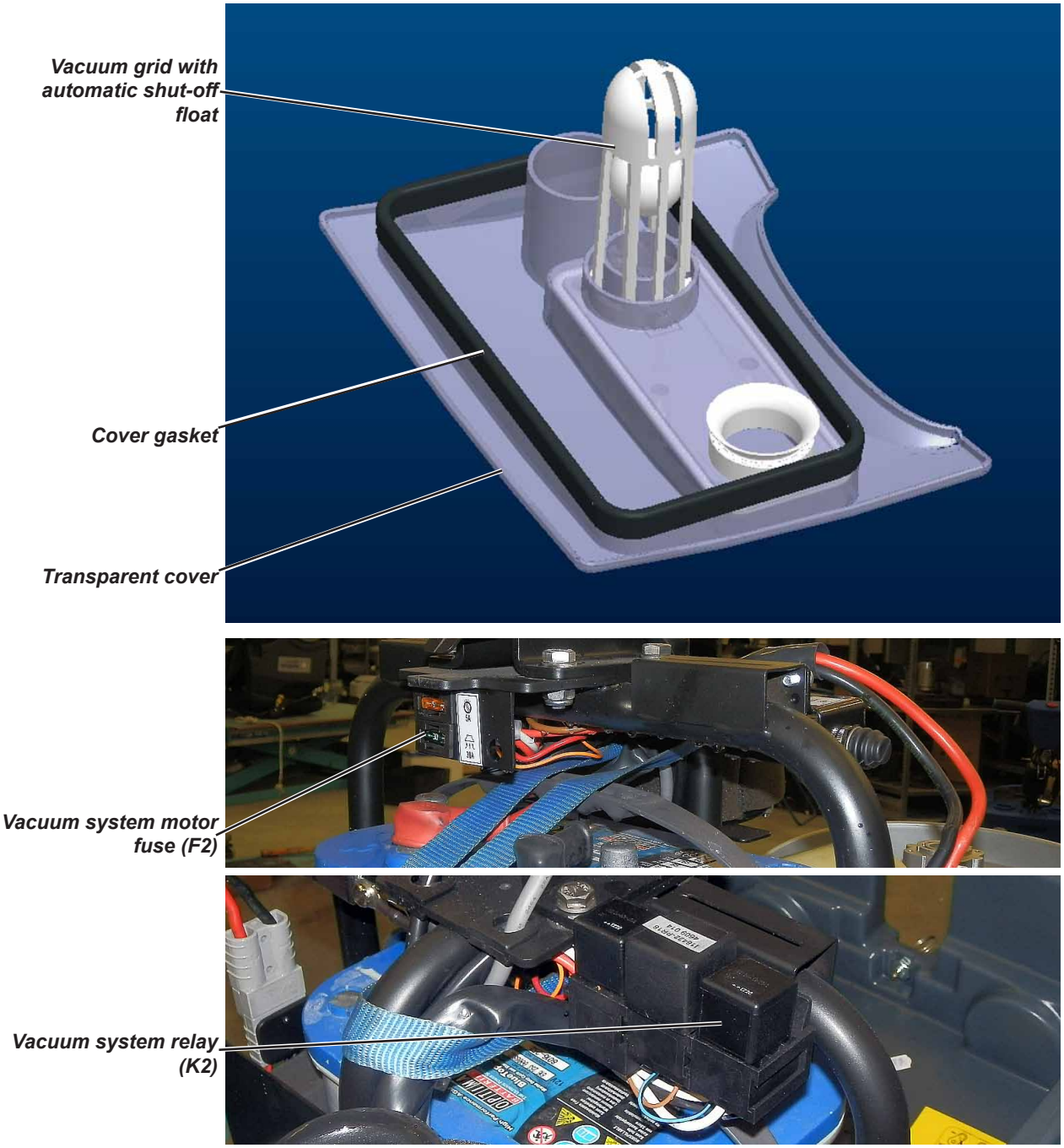

P100788

Manufacturer PDF Provided by www.southeasternequipment.net

Maintenance and Adjustments

Tank and Vacuum Grid Cleaning

1. Drive the machine to the appointed disposal area.
2. Check that the function selection knob is turned to “0” and disconnect the battery connector.
3. Remove the cover (A), clean and wash the cover and the vacuum grid (B) with clean water.
4. Drain the water from the tanks (C and D) and clean them.
5. If necessary, disassemble the grid (B) and remove the float (E), than clean with care and reinstall.
6. Check the recovery tank cover gasket (F) for integrity.

Note: The gasket (F) creates vacuum in the tank that is necessary for vacuuming the recovery water.

7. If necessary replace the gasket (F) by removing it from its housing (G) on the cover. When assembling the new gasket, install the joint (H) in the area shown in the figure.
8. Check that the seating surface (I) of the gasket (F) is clean and adequate for the gasket itself.
9. Check the vacuum duct (J) and the gasket (K), carefully clean if necessary.
10. Reinstall the recovery tank cover (A).

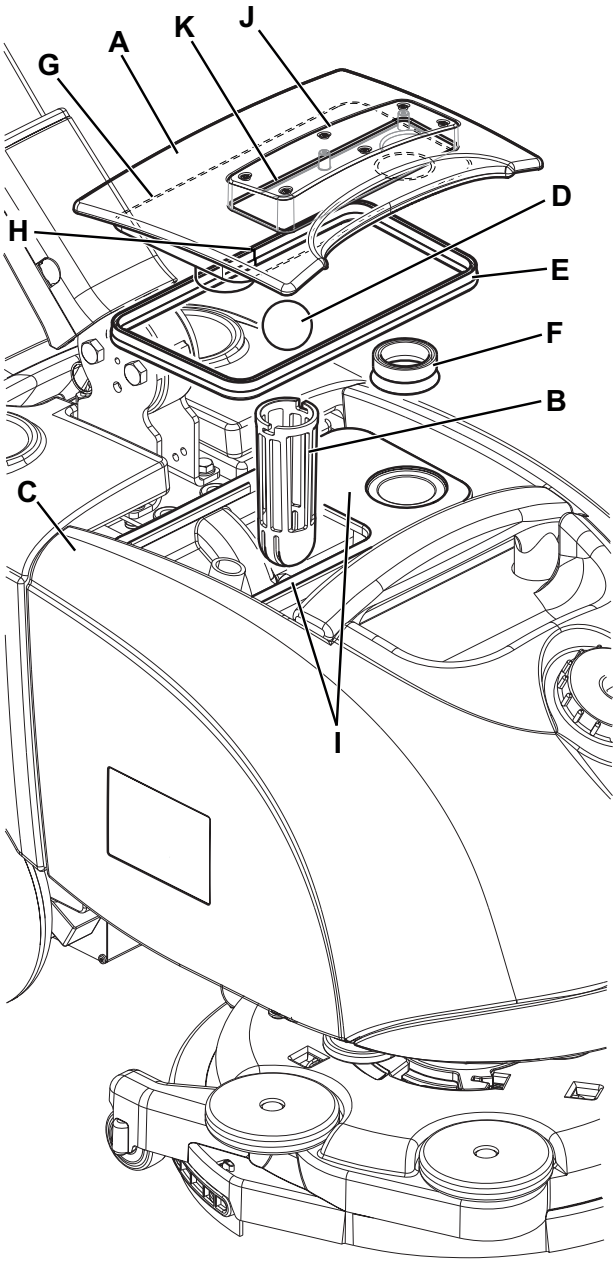

P100789A

Manufacturer PDF Provided by www.southeasternequipment.net

Vacuum System Gasket Cleaning

Note: The gaskets (L) and (M) create vacuum in the system that is necessary for vacuuming the recovery water.

1. Drive the machine on a level floor.
2. Check that the function selection knob is turned to “0” and disconnect the battery connector.
3. Open the cover (A) and check the vacuum system motor gasket (L) for integrity.
4. If necessary replace the gasket by removing it from its housing.
5. Remove the recovery tank (C).
6. Check the recovery water duct gasket (M) for integrity. If necessary, replace the gasket.
7. Clean with care and reinstall.

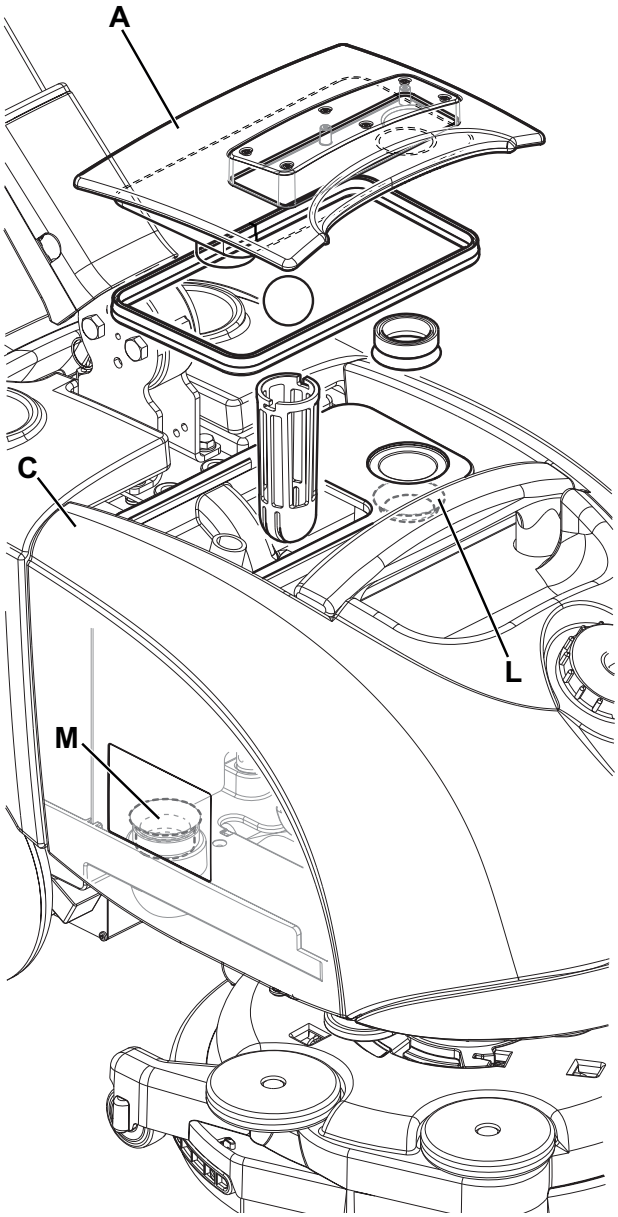

P100790A

Manufacturer PDF Provided by www.southeasternequipment.net

Troubleshooting

Trouble	Possible Causes	Remedy
The vacuum system motor (M2) does not turn on.	The program selection knob/rotary switch (SW1) is broken.	Replace.
	The vacuum system motor (M2) is faulty.	Check the amperage.
		Replace.
	The vacuum system motor fuse (F2) is open.	Replace.
	The vacuum system motor relay (K2) is broken.	Replace.
The recovery water vacuuming is insufficient or there is no vacuuming.	The vacuum grid with automatic shut-off float is activated because the recovery tank is full.	Drain the recovery tank.
	The vacuum grid is dirty.	Clean.
	The transparent cover is not properly positioned.	Adjust.
	The tank cover gasket is not sealing.	Clean/replace.
	The vacuum system motor filter is dirty.	Clean.
	The vacuum gaskets are damaged or do not match perfectly.	Repair or replace.
	The squeegee or the vacuum hose is clogged or damaged.	Clean/repair/replace.

Warning! ***This procedure must be performed by qualified personnel only.***

Measure the vacuum suction at the end of the recovery hose with a gauge

Note: *For the particular shape of the end vacuum hose (not circular), this operation is to be performed with a suitable rettangular support mounted on the gauge.*

1. Disconnect the vacuum hose from the squeegee.
2. Turn the knob on the number 3 working program.
3. With the gauge verify that the value is 27.7 in/H_2O (710 mmH_2O)

P100791

Manufacturer PDF Provided by www.southeasternequipment.net

Vacuum System Motor Amperage Check

1. Remove the solution and recovery water tanks.
2. Apply the amp clamp (A) on the cable (B).
3. Turn the knob on the working program.
4. Check that the motor amperage is between 15 and 18 A at 12 V.
5. Turn the knob to “0”.
6. Remove the amp clamp (B).
7. If the amperage is higher than specified, disassemble the vacuum system motor (see the procedure in the relevant paragraph), and check the condition of its moving parts.
8. If the procedure does not lead to a correct amperage, it is necessary to replace the motor.
9. Reinstall the solution and recovery water tanks.

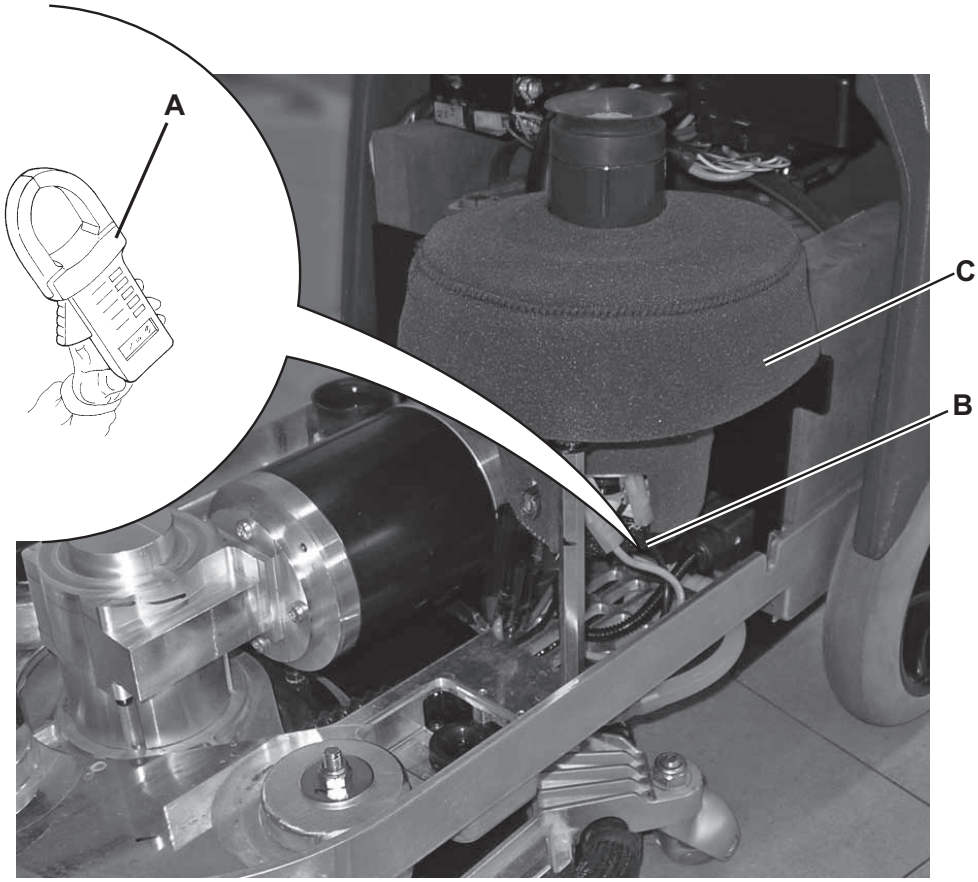

P100791

Manufacturer PDF Provided by www.southeasternequipment.net

Removal and Installation

Vacuum System Motor Disassembly/Assembly

Disassembly

1. Remove the solution and recovery water tanks.
2. Make sure that the battery connector is disconnected.
3. Disconnect the 2 electrical connectors (A) for the motor (B).
4. Remove the acoustic insulation panel (C).
5. Remove the screws (D), recover the washers and nuts.
6. Remove the motor cover (E) and recover the gasket (F).
7. Remove the motor (B) and the acoustic insulation pipe (G)
8. Check the gasket (F) and the gasket (H) for damage. If necessary, replace.

Assembly

9. Assemble the components in the reverse order of disassembly and note the following:
   - When installing the gasket (I) into the housing (J) turn it until the lower tooth (K) and upper teeth (L) are as shown in the figure.
   - Install the motor (B) with the power supply contacts as shown in the figure (M).

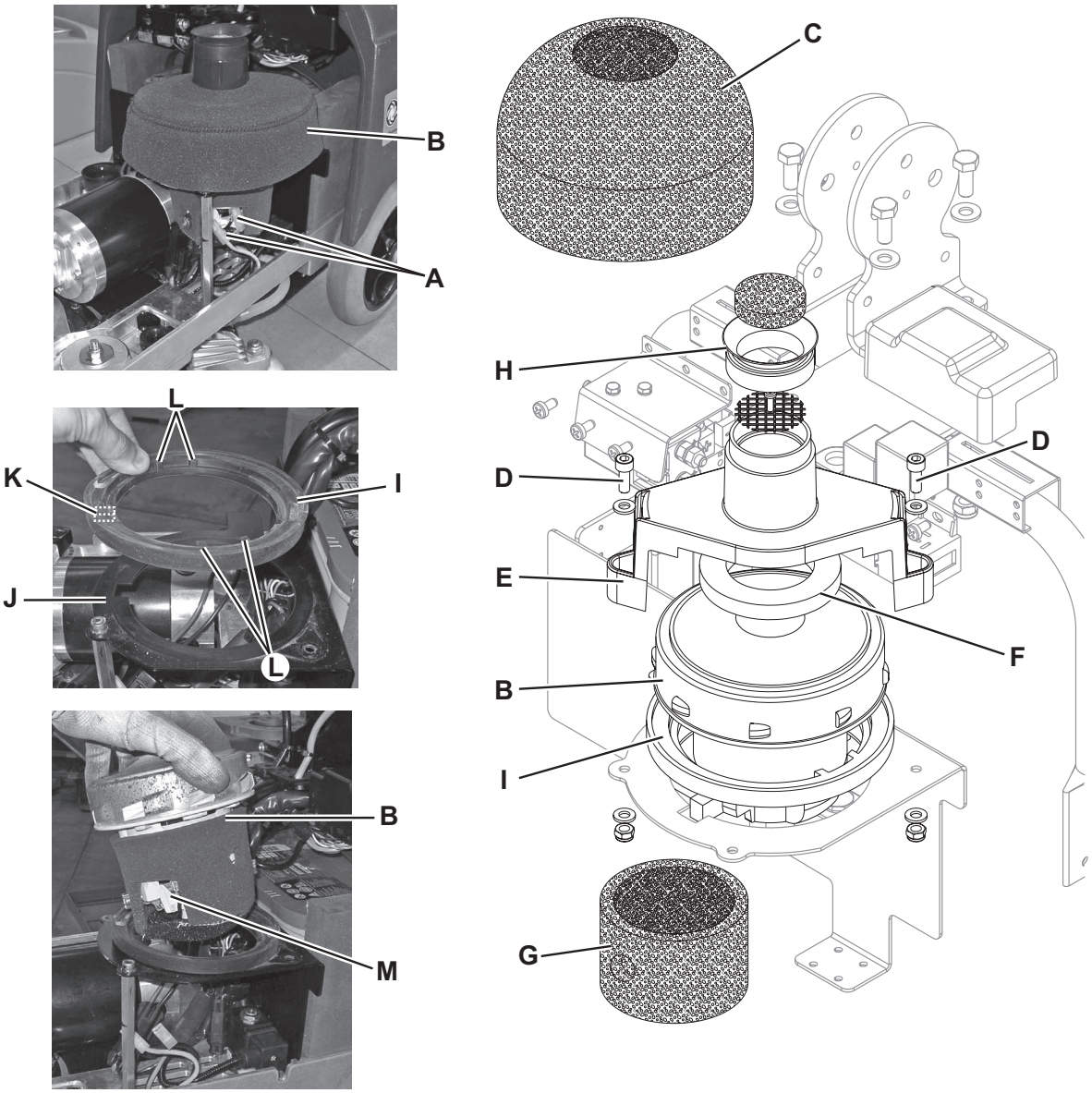

P100792

Manufacturer PDF Provided by www.southeasternequipment.net

Specifications

Description	Nilfisk Alto SCRUBTEC 337.2	Clarke VANTAGE 14
Recovery tank capacity	2.9 USgal (11 litres)	
Vacuum system motor power	0.27 hp (200 W)	
Vacuuming (with closed inlet)	27.7 in/H_2O (710 mmH_2O)	

Manufacturer PDF Provided by www.southeasternequipment.net

Scrub System, Disc

Functional Description

The disc brush system can be started by the operator.
The disc brush turns counter-clockwise.
The brush system, when turning, cleans/washes the floor surface and assists machine forward movement.
The deck, where brushes suitable for cleaning the particular type of floor are installed, is the main part of the scrub system. The brush deck is fixed and integrated in the machine with a support bracket. The adjusting systems adjusts the forward speed, while the handwheel on the deck adjusts the machine straight-forward drive.
The brush working pressure is functional to the machine designed balance.
The brush motor (M1) is supplied by vacuum brush motor relay (K1) which is driven by the program selection knob/rotary switch (SW1) when it is turned to 1, 2 or 3, and the machine start-up enabling push-button (SW2) is pressed. The circuit is protected by the brush motor fuse (F1).
The system, once activated, uses the solution coming form the solution system, to wash the floor.
To work properly, the brush motor needs the following:

- Program selection knob/rotary switch (SW1) turned to 1, 2 or 3
- Machine start-up enabling push-button (SW2) pressed
- Charged batteries (the red LED must not be flashing).
- Battery charger is completing path to battery negative for B2

(Only for the Vantage 14) When necessary, to use the squeegee in the opposite direction, pry on the handlebar and slightly lift the deck while the brush is turning. The rubber pads mounted into the deck allow the mechanical rotation by creating friction on the rotating brush. When the deck is turned by 180° start to scrub/dry by drawing the machine.
To resume working in the normal forward direction, push the machine forward until the brush deck returns to the original position.

Wiring Diagram

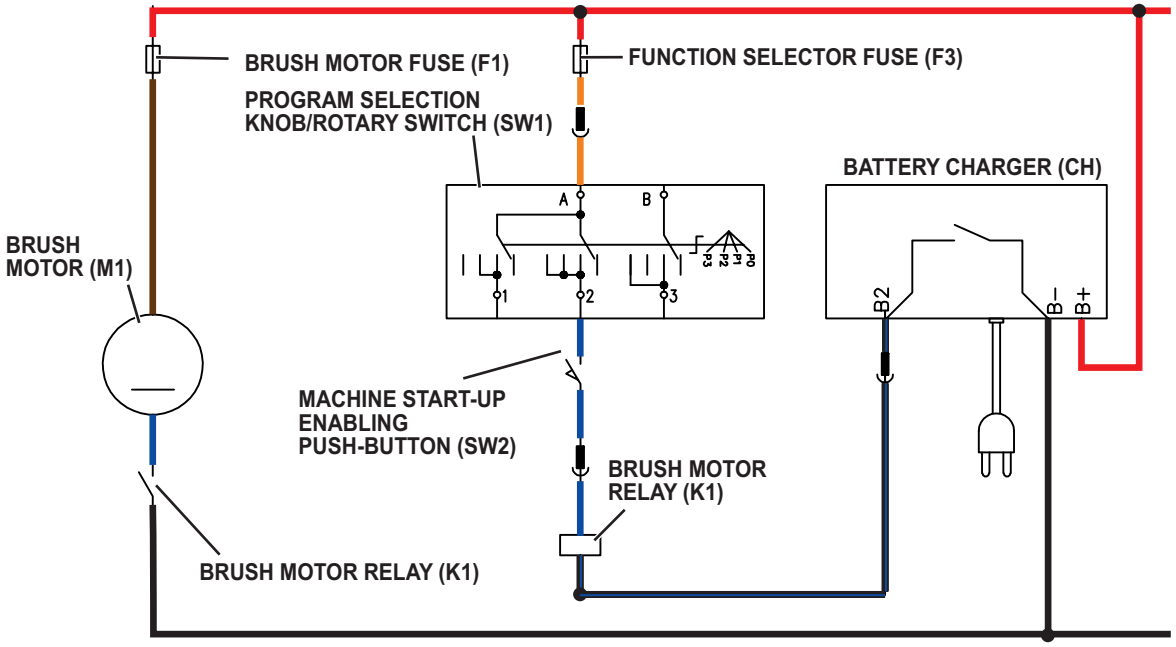

P100793

Manufacturer PDF Provided by www.southeasternequipment.net

Component Locations

- Brush deck
- Brush motor (M1)
- Drive hub
- Machine forward speed adjusting handwheel
- Machine straight forward movement adjusting handwheel
- Deck rotation end of stroke system

P100794

Manufacturer PDF Provided by www.southeasternequipment.net

Component Locations (Continues)

- Brush motor fuse (F1)
- Brush motor relay (K1)

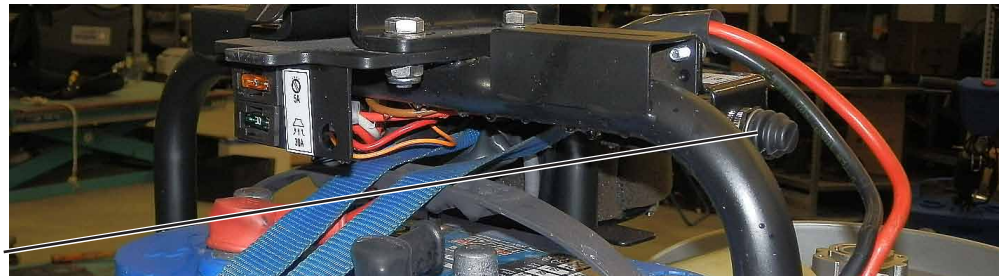

P100781

Manufacturer PDF Provided by www.southeasternequipment.net

Maintenance and Adjustments

Brush Cleaning

Warning! ***It is advisable to wear protective gloves when cleaning the brush because there may be sharp debris.***

1. Remove the brush.
2. Clean the brush with water and detergent.
3. Check the brush bristles for integrity and wear; if necessary, replace the brush.

Machine Speed Adjustment

Note: *The machine speed and forward movement vary according to the type of floor to be cleaned and the choice of using the brush or the pad.*
If necessary, perform the adjustments as shown.

1. Remove the recovery and the detergent tanks.
2. Adjust the machine speed with the handwheel (A):
   - Turn the handwheel counter-clockwise to increase the machine speed.
   - Turn the handwheel clockwise to decrease the machine speed.
3. If it is difficult to keep the machine moving in a straight line because it deviates to the left or to the right, adjust the handwheel (B) by turning it clockwise or counter-clockwise.
4. After adjusting, install the tanks.
5. With the machine ready to operate, perform hands-on tests of the machine and, if other adjustments are necessary, repeat steps 1 to 4.

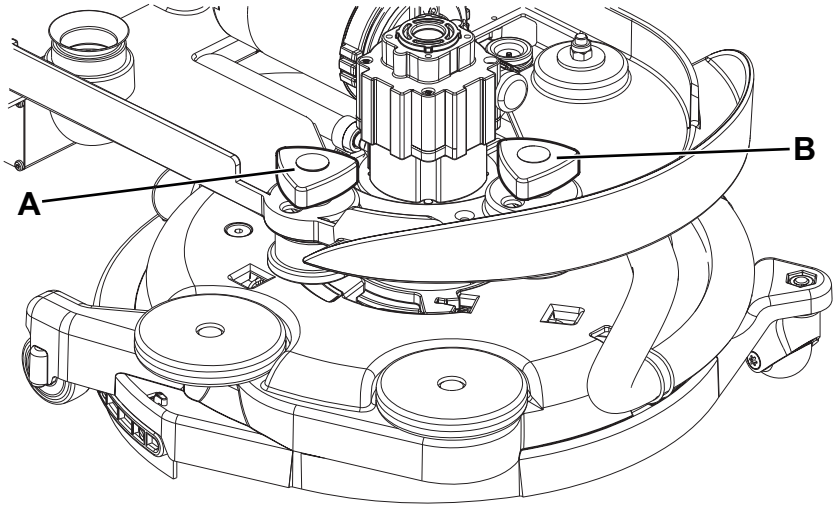

P100795

Manufacturer PDF Provided by www.southeasternequipment.net

Troubleshooting

Open Circuit

- The brush motor fuse (F1) determines an open in the supply circuit of the brush deck motor. This protects the circuits from being damaged under overload conditions.
- The open in the fuse can be caused by the following:
- Short circuit in the brush motor wiring harness; fault in the motor.

Trouble	Possible Causes	Remedy
The brush does not clean properly	The brush is excessively worn	Replace
The brush does not turn	The motor is faulty	Check the motor amperage/replace
	There are ropes or debris restraining the brush rotation	Remove and clean
	The Brush motor fuse (F1) is open	Replace
	The brush motor relay (K1) is damaged	Replace
	The program selection knob/rotary switch (SW1) is broken	Replace
	The levers or the machine start-up enabling push-button (SW2) are broken	Replace

Warning! ***This procedure must be performed by qualified personnel only.***

Manufacturer PDF Provided by www.southeasternequipment.net

Brush Motor Amperage Check

1. Drive the machine on a level floor.
2. Remove the brush, as shown in the User Manual.
3. Place two wooden shims (A) under the side area of the deck as shown in the figure. Wooden shim thickness must be 1.5 in (40 mm).

Warning! ***Keep the wooden shims at an appropriate distance from the brush hub.***

4. Turn the knob on the brush activation program.
5. Apply the amp clamp (A) on one cable (B) of the brush motor.
6. Turn on the brush by pressing the push-button (39) together with the levers (40), then check that the motor amperage (C) is 6 to 8 A at 12 V.
7. Turn off the brush by releasing the levers (40).
8. Turn the knob (32) to “0”.
9. Remove the amp clamp (A).
10. If the amperage is higher, perform the following procedures to detect and correct the abnormal amperage:
    - Check if there is dust or dirt (ropes, cables, etc.) on the brush hubs.
    - Disassemble the motor (see the procedure in the relevant paragraph), and check the condition of all its components.

    If the above-mentioned procedures do not lead to a correct amperage, the motor must be replaced (see the procedure in the relevant paragraph).

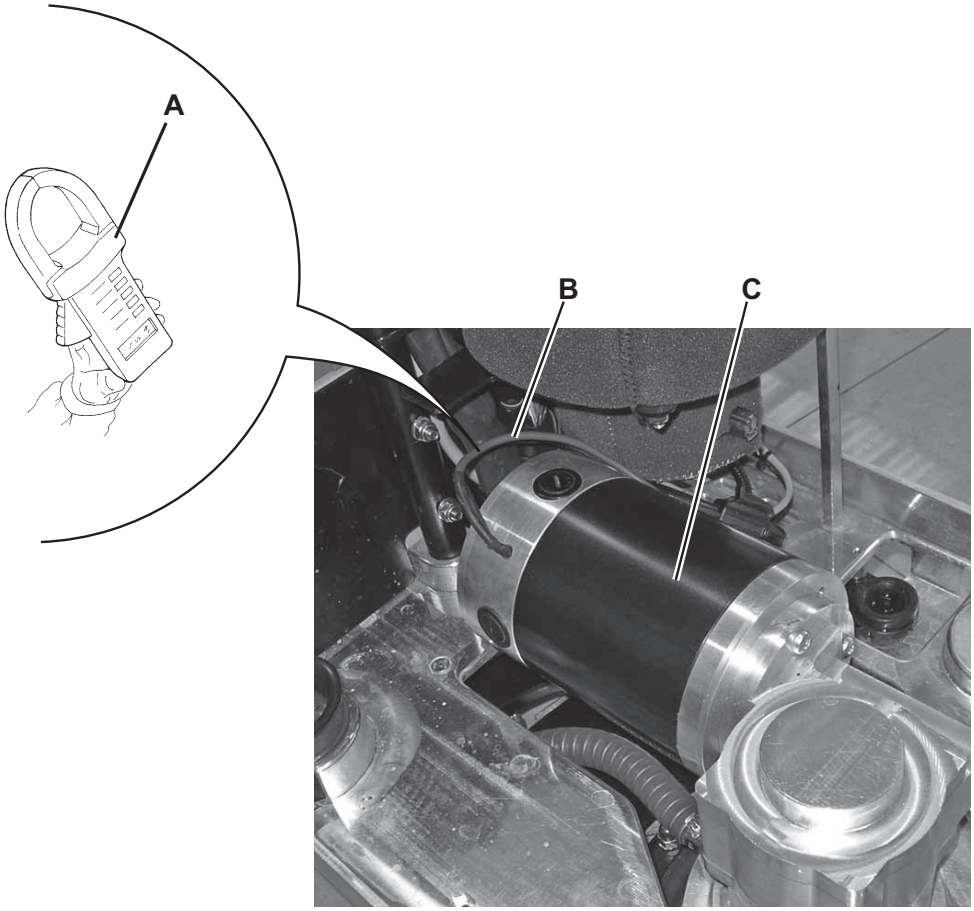

P100796

Manufacturer PDF Provided by www.southeasternequipment.net

Removal and Installation

Brush Deck Disassembly/Assembly

Disassembly

1. Place the machine on a hoisting system (if available), then lift it. Otherwise, drive the machine on a level floor.
2. Make sure that the battery connector is disconnected.
3. Disconnect the vacuum hose from the squeegee (A).
4. Lift the machine and remove the brush.
5. Remove the centre screw, remove the hub assembly (B) and retrieve the transmission pin key (C).
6. Remove the 4 screws (D), the deck flange (E) and disassemble the brush deck (F).
7. Check the rubber pads (G) for integrity, and replace them if excessively worn.

Note: The rubber pads (G) allow the deck mechanical rotation by creating friction on the rotating brush.

8. Check the end-of-stroke spacer tab (H) and replace it if necessary.
9. Check the centre flange (I) and the relevant springs for integrity, if necessary replace them.

Note: The centre flange (I) absorbs blows and vibrations between the deck and the machine.

10. Upon reassembly, couple the centre flange with the deck to match the reference arrows (J).

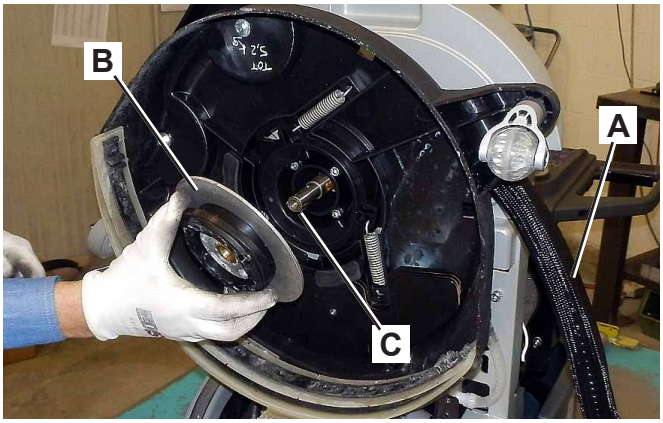

P100797

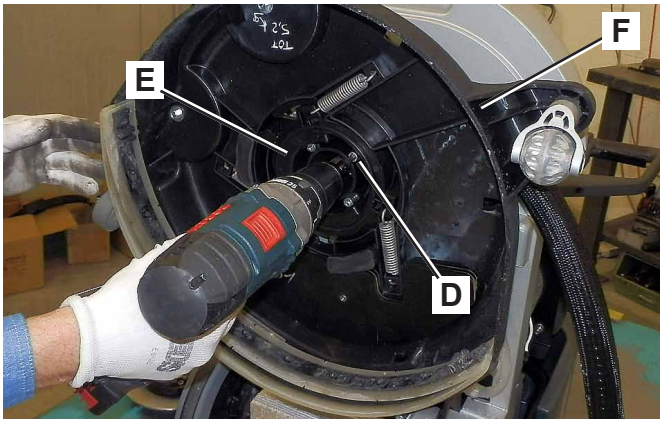

P100798

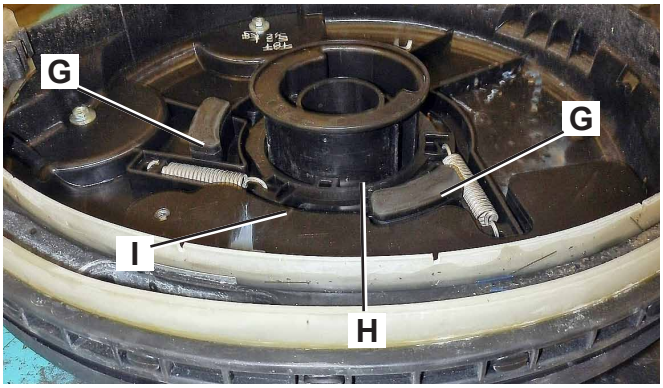

P100799

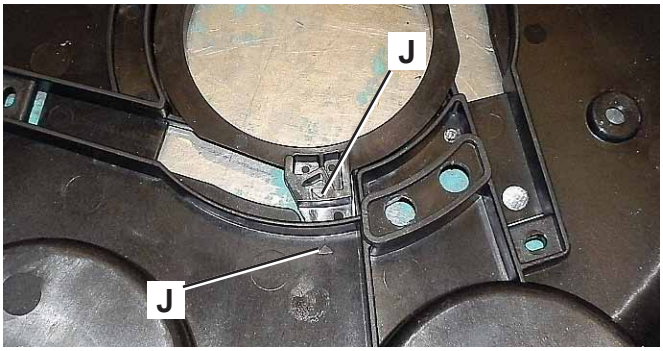

P100800

Manufacturer PDF Provided by www.southeasternequipment.net

Brush Deck Disassembly/Assembly (Continues)

11. Install the centre flange springs (K) by engaging them on the deck housings and on the centre flange housings (L) as shown in the figure.

P100801

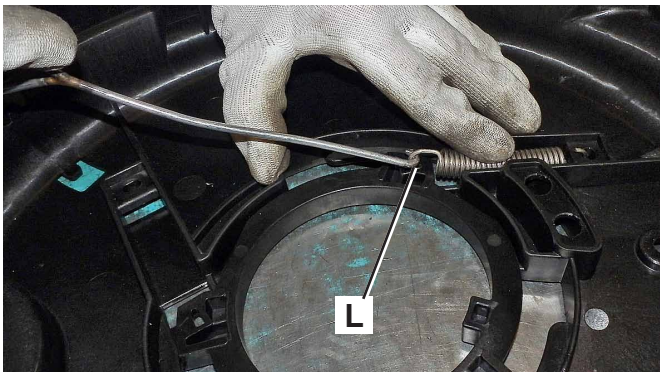

P100802

Assembly

12. Assemble the components in the reverse order of disassembly and note the following:
    - Couple the tooth (M) of the end-of-stroke spacer tab (N) and the deck flange, as shown in the figure.
    - Assemble the brush deck by matching the deck flange polarization (O) with the one of the deck holder (P).

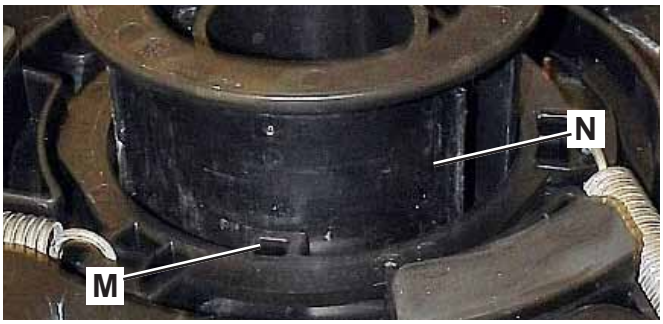

P100799

Note: For further information on deck components see the Spare Parts List.

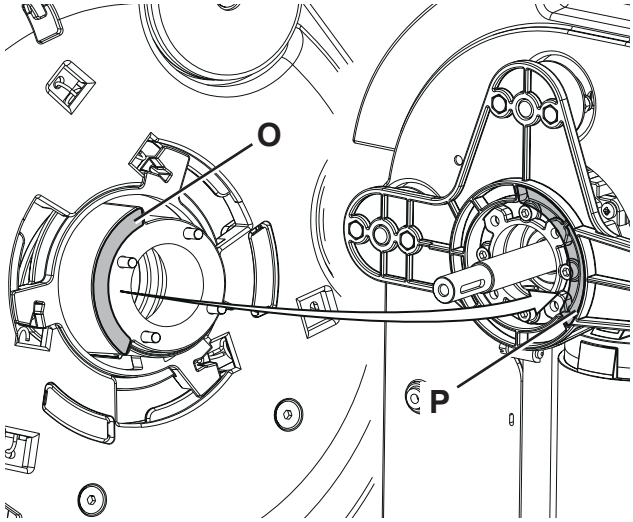

P100803

Manufacturer PDF Provided by www.southeasternequipment.net

Brush Motor Disassembly/Assembly

Disassembly

1. Place the machine on a hoisting system (if available), then lift it. Otherwise, drive the machine on a level floor.
2. Make sure that the battery connector is disconnected.
3. Disconnect the gearmotor connector (A) and the detergent hose (B).
4. Lift the machine and remove the brush.
5. Disassemble the brush deck as shown by the previous procedure.
6. Recover the key (C).
7. Remove the 4 screws (D).
8. Remove the gearmotor (E).

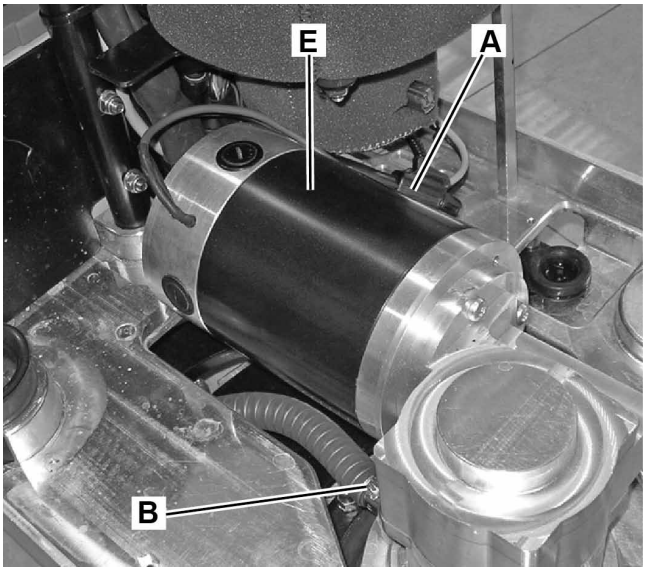

P100804

Assembly

9. Assemble the components in the reverse order of disassembly.

Note: For further information on deck components see the Spare Parts List.

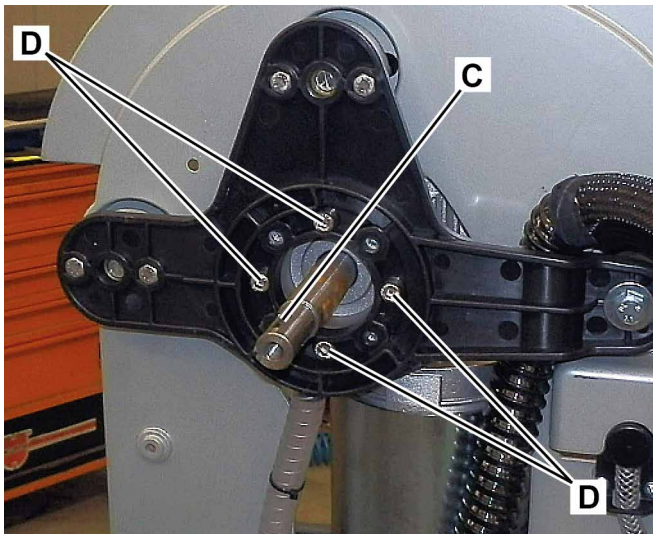

P100805

Manufacturer PDF Provided by www.southeasternequipment.net

Specifications

Description	Nilfisk Alto SCRUBTEC 337.2	Clarke VANTAGE 14
Brush/pad diameter	14.5 in (370 mm)	
Brush/pad pressure on the floor	46 lb (21 Kg)	
Brush/pad pressure with full tank	66 lb (30 Kg)	
Brush motor power	0.32 hp (240 W)	
Brush motor speed	140 rpm	

Manufacturer PDF Provided by www.southeasternequipment.net

Solution System

Functional Description

The solution system supplies the detergent to the brush when cleaning the floor. The solution tank is also the main machine body. There is a manual valve on the left side of the tank to close the water supply whenever maintenance must be performed on the machine.
The detergent quantity is adjusted by the operator with the solution flow switch (SW3). The solution flows from the tank to the tap, through the filter and solenoid valve (EV) and then to the brush deck.
The solenoid valve (EV) is driven by the program selection knob/rotary switch (SW1) when it is turned to 1 or 2, and the machine start-up enabling push-button (SW2).
When the solution flow switch (SW3) is open the solenoid valve (EV) is driven by solenoid valve timer (KT1) (2 sec. ON - 2 sec. OFF). When the solution flow switch (SW3) is closed the solenoid valve (EV) is always on (by-pass the solenoid valve timer).
The circuit is protected by the function selector fuse (F3) on the LED electronic board (EB1).
The solenoid valve (EV) opening and closing time, according to the water flow, are shown below:

Solution flow switch (SW3) setting	Solenoid valve (EV) ON time	Solenoid valve (EV) OFF time
0	2 sec	2 sec
1	Always ON	-

Wiring Diagram

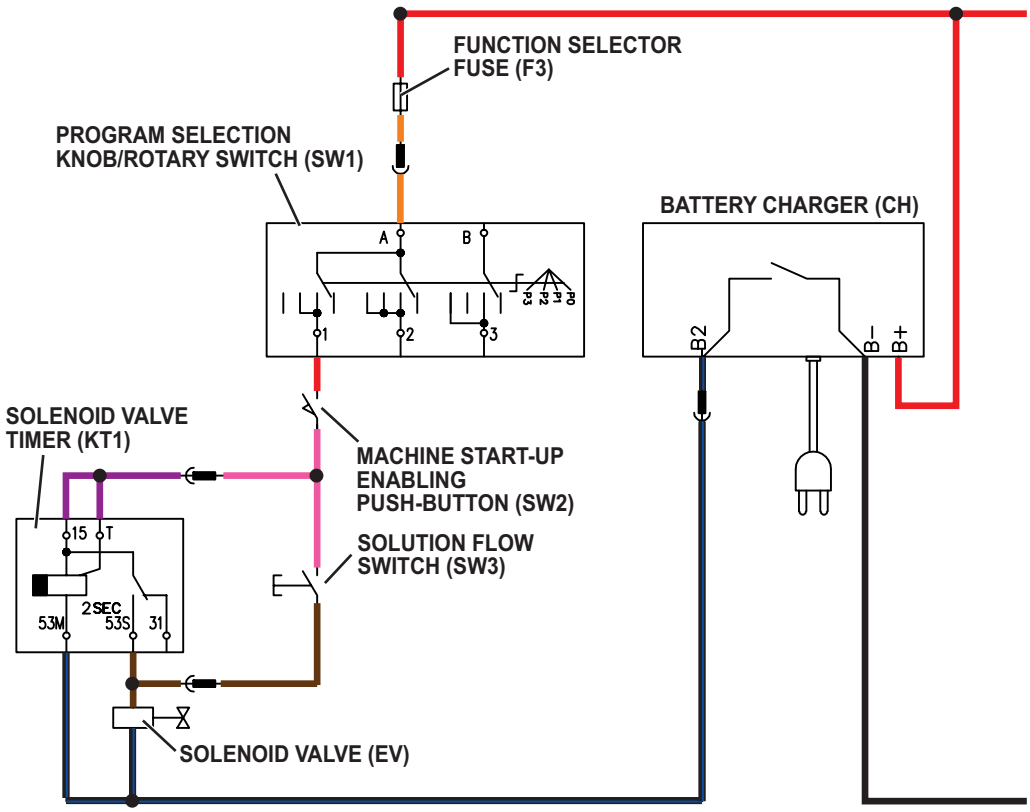

P100806

Manufacturer PDF Provided by www.southeasternequipment.net

Component Locations

- Solution tank
- Filler plug
- Detergent valve
- Solenoid valve (EV)
- Detergent hose

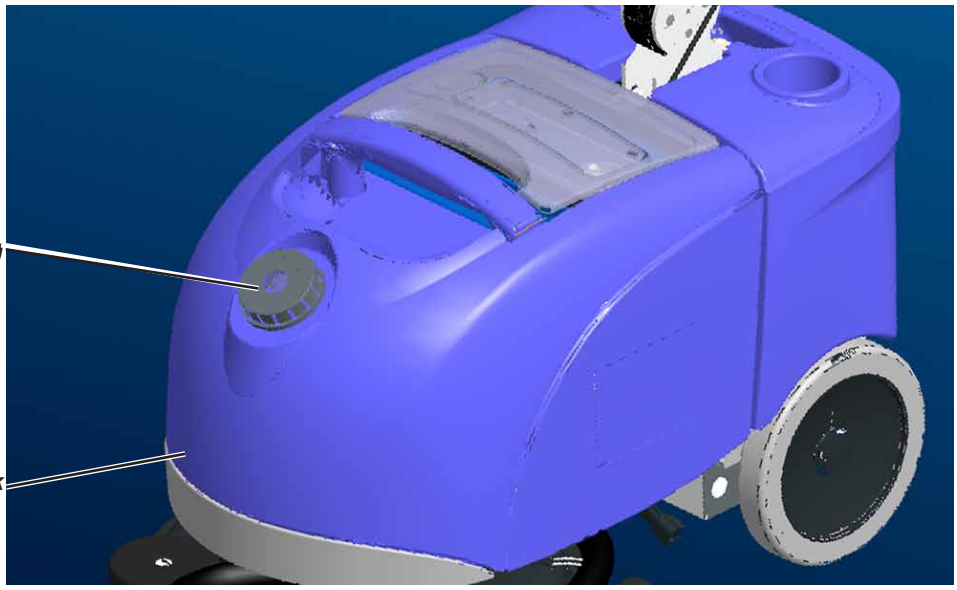

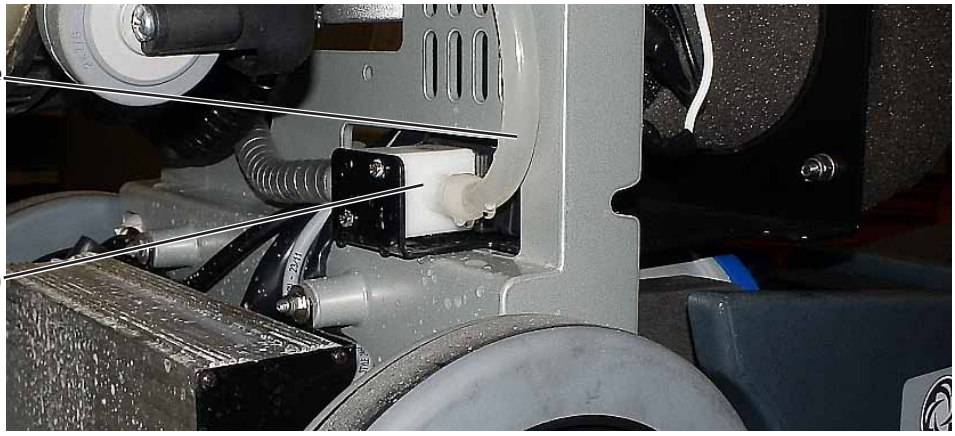

P100807A

Manufacturer PDF Provided by www.southeasternequipment.net

Component Locations (Continues)

- Solenoid valve timer relay (KT1)

P200067

Manufacturer PDF Provided by www.southeasternequipment.net

Troubleshooting

Trouble	Possible Causes	Remedy
Small amount of solution or no solution reaches the brush	The valve between tank and solution hose is clogged/dirty	Clean
	The solenoid valve (EV) is faulty or the electrical connection is open	Replace the solenoid valve or repair the electrical connection
	There is dust/debris in the tank or in the detergent hoses, obstructing the solution flow	Clean the tank/hoses
	The function selector fuse (F3) is open	Replace
	The solenoid valve relay (KT1) is broken	Replace
	The program selection knob/rotary switch (SW1) is broken	Replace
	The levers or the machine start-up enabling push-button (SW2) are broken	Replace
The solution leaks when the machine is off	The solenoid valve (EV) is dirty/broken	Clean/replace

Manufacturer PDF Provided by www.southeasternequipment.net

Removal and Installation

Solution System Solenoid Valve Disassembly/Assembly

Disassembly

1. Place the machine on a hoisting system (if available), then lift it. Otherwise, drive the machine on a level floor.
2. Make sure that the battery connector is disconnected.
3. Remove the cover and the solution and recovery water tanks.
4. Remove the solenoid valve power supply connector (A).
5. Disconnect the hoses (B) and (C) under the machine.
6. Remove the screws (D) and recover the washers.
7. Remove the solenoid valve (E) upwards.

Assembly

8. Assemble the components in the reverse order of disassembly and note the following:
   - When assembling the solenoid valve (E), the stamped arrow (F) must be tuned in the direction of the solution flow as shown in the figure.

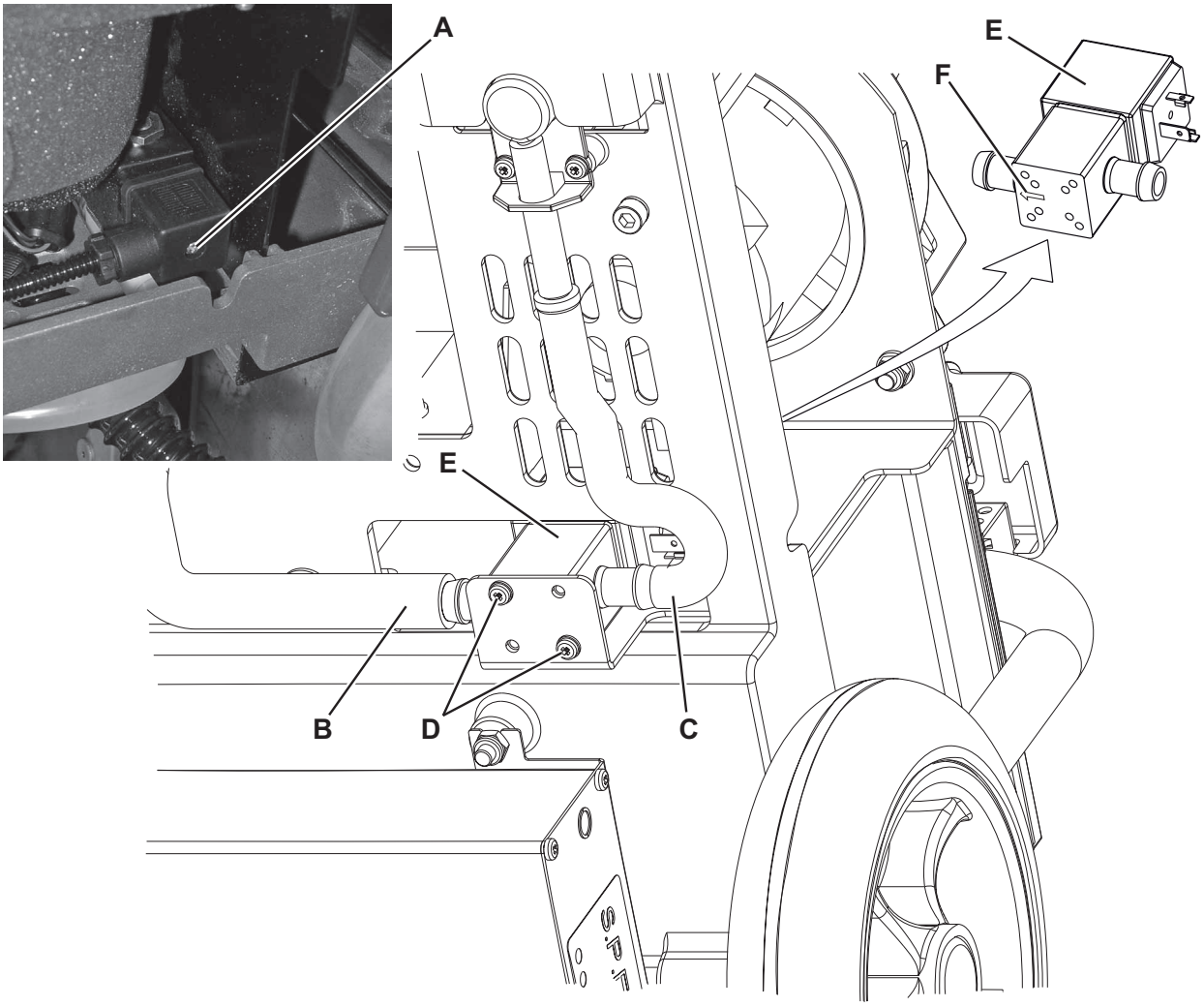

P100808

Manufacturer PDF Provided by www.southeasternequipment.net

Specifications

Description	Nilfisk Alto SCRUBTEC 337.2	Clarke VANTAGE 14
Solution tank capacity	3,2 USgal (12 litri)	
Min/max solution flow	One drop: 0.066 gpm (0.25 litres/min) Two drops: 0.13 gpm (0.5 litres/min)	
Resistance solenoid valve	16 Ohm	

Manufacturer PDF Provided by www.southeasternequipment.net

Squeegee System

Functional Description

The squeegee system cleans the liquid off the floor, which is then collected by the recovery system.
The squeegee is fastened to the brush deck by 2 hooks and the vacuum hose.
When the machine is running, the conformation of the squeegee and the brush deck rotation mechanism, assist in the alignment and accurate vacuuming of the water from the floor. The 2 blades have different hardness:
- Front blade; with ruled side to convey the water towards the centre of the squeegee.
- Rear blade; smooth, to collect the water and dry the floor.

All 4 functional edges of each blade can be used before replacing the blade itself.
The design and the central duct make it easy for the squeegee to clear the water.

Manufacturer PDF Provided by www.southeasternequipment.net

Component Locations

- Squeegee
- Rear blade
- Rear elastic strap
- Front blade
- Front strap

P100809

Manufacturer PDF Provided by www.southeasternequipment.net

Maintenance and Adjustments

Squeegee Cleaning

Note: *The squeegee must be clean and its blades must be in good conditions in order to get a good drying.*

Caution! ***It is advisable to wear protective gloves when cleaning the squeegee because there may be sharp debris.***

1. Drive the machine on a level floor.
2. Check that the function selection knob is turned to “0” and disconnect the battery connector.
3. Fully turn the brush/pad-holder deck counter-clockwise.
4. Disconnect the vacuum hose (A) from the squeegee.
5. Disengage the squeegee (B) from the deck.
6. Wash and clean the squeegee. In particular, clean the compartments (C) and the vacuum hole (D).
7. Check the front blade (F) and the rear blade (G) for integrity, cuts and tears; if necessary replace them (see the procedure in the following paragraph).
8. Assemble the components in the reverse order of disassembly.
9. Assemble the components in the reverse order of disassembly.

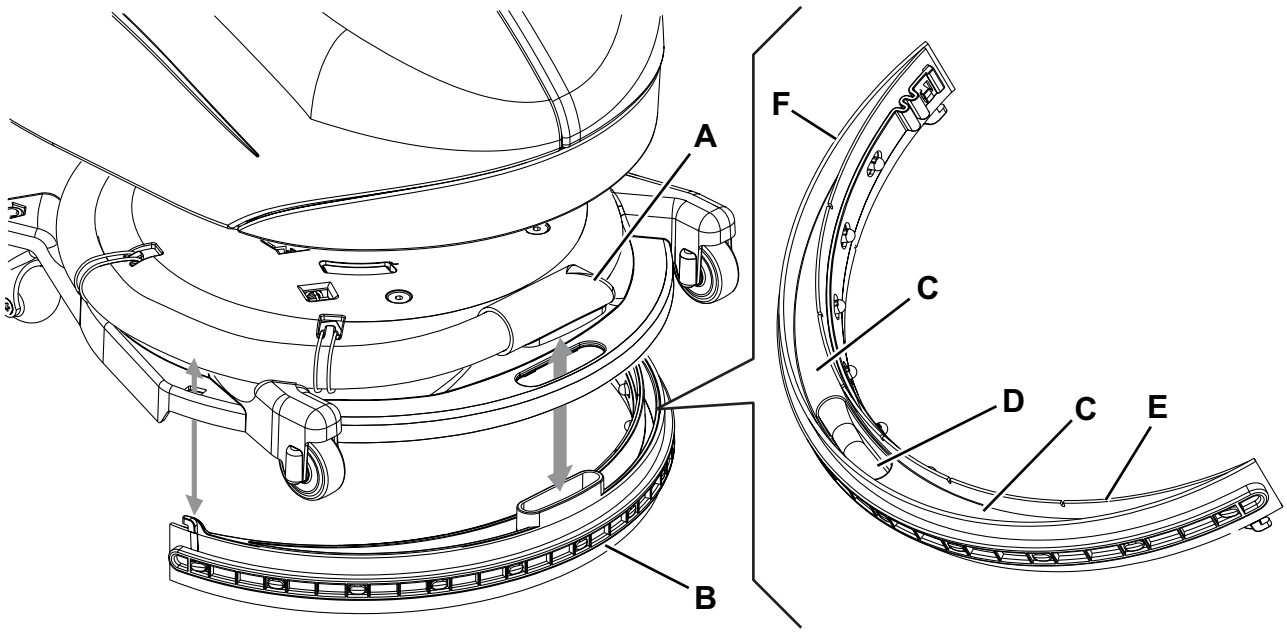

P100810

Manufacturer PDF Provided by www.southeasternequipment.net

Squeegee Blade Check and Replacement

1. Clean the squeegee as shown in the previous paragraph.
2. Check that the front blade (E) and the rear blade (F) are integral and free from cuts and lacerations; if necessary replace them. Check that the front edge (G) of the rear blade is not worn; otherwise, overturn the blade to replace the worn edge with an integral one. If the other edges are worn too, replace the blade as shown:
   - Remove the fastening strap (H) by disengaging it from the fasteners (I).
   - Replace (or overturn) the rear blade (F), then reinstall the fastening strap.
   - Remove the fastening strap (J) by disengaging it from the fasteners (K).
   - Replace (or overturn) the front blade (E), then reinstall the fastening strap.
3. Install the squeegee (B) by carefully inserting the hooks (L) and the vacuum hole (M) in the brush deck housings.
4. Connect the vacuum hose (A) to the squeegee.

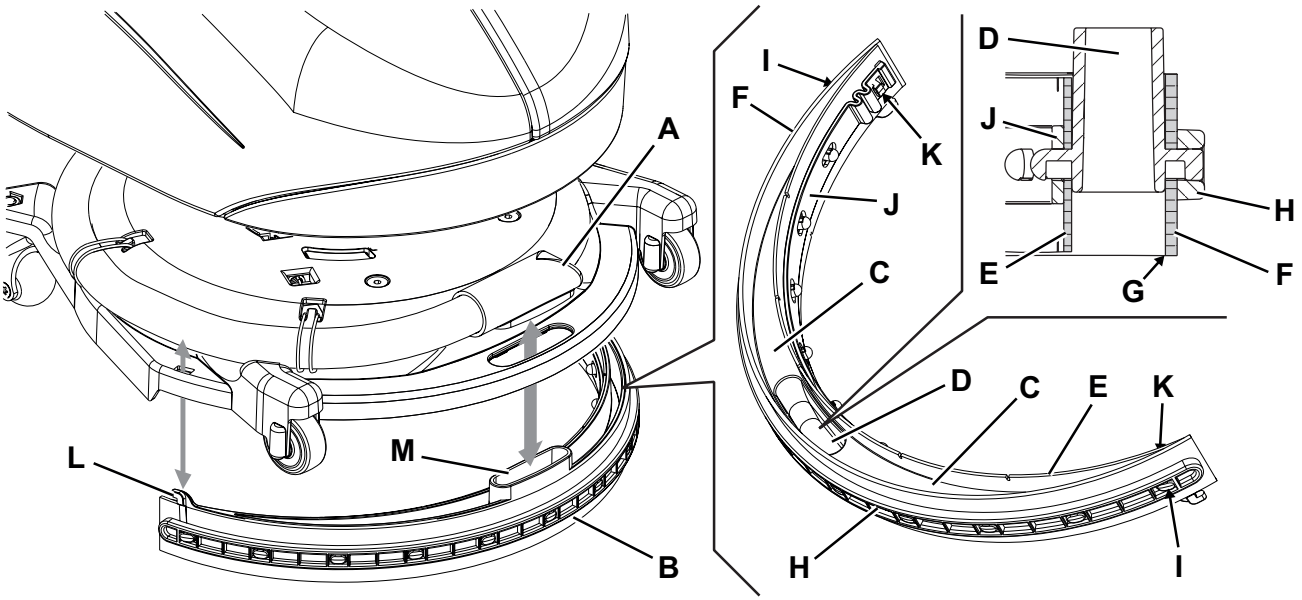

P100811

Manufacturer PDF Provided by www.southeasternequipment.net

Troubleshooting

Trouble	Possible Causes	Remedy
Leaving streaks on floor	There is debris under the blade	Remove
	The squeegee blade edges are torn or worn	Replace

Manufacturer PDF Provided by www.southeasternequipment.net

Wheel System, Non-Traction

Component Locations

- Rear wheels on fixed axle
- Castors on brush deck
- Rear wheels on brush deck

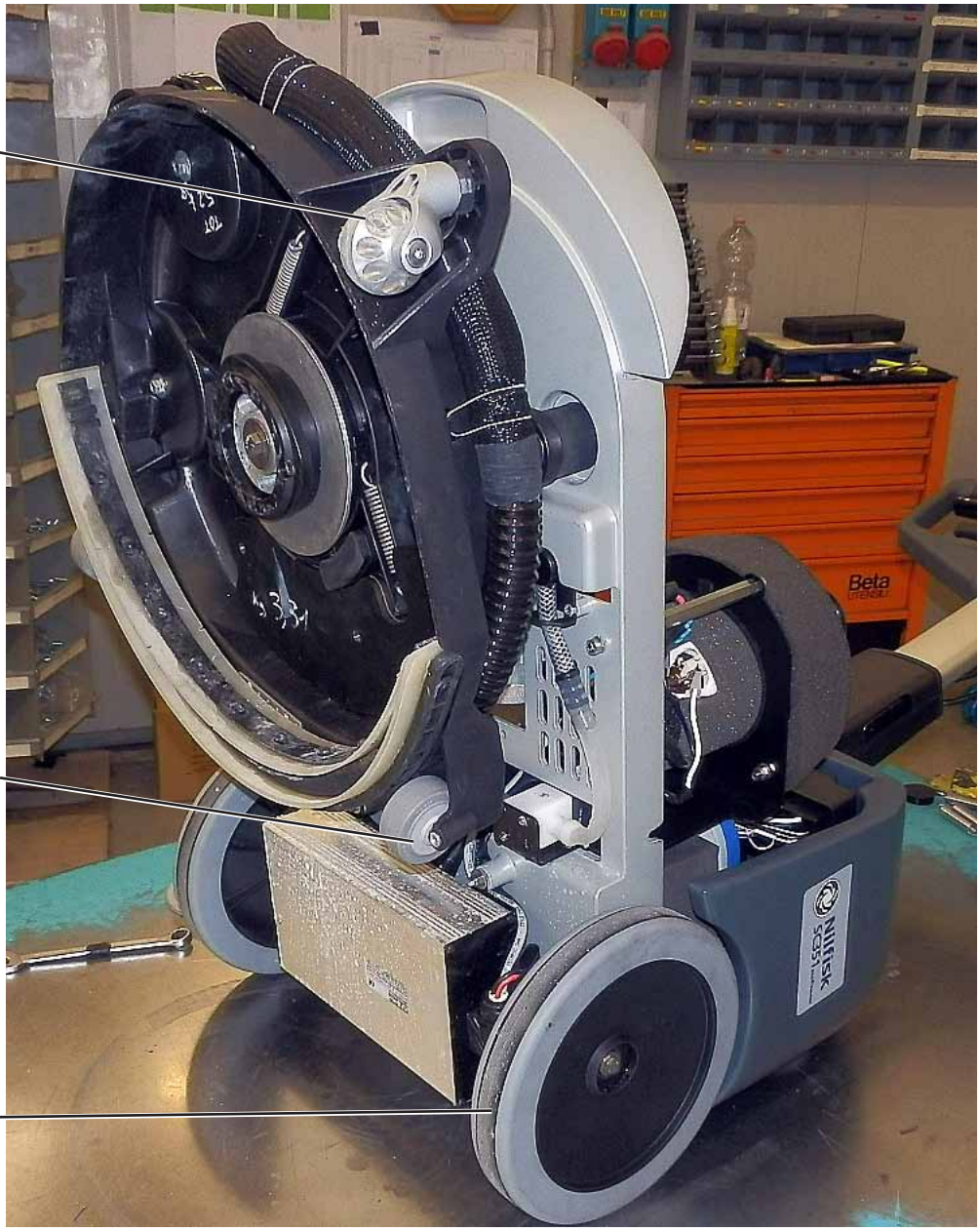

P100812

Manufacturer PDF Provided by www.southeasternequipment.net

Specifications

Description	Advance SC351	Nilfisk SC351	Nilfisk SC351 full PKG
Diameter of wheels on fixed axle	8.4 in (214 mm)		
Wheel pressure on the floor	72.5 psi (0.5 N/mm^2)		