Manufacturer PDF Provided by www.southeasternequipment.net

Minuteman®

User Manual

E17/E20/H20 Walk-Behind Scrubber
Disc Traction Drive

Minuteman,Inc.
A member Of The Hako Group

988721UM REV F 10/22

Manufacturer PDF Provided by www.southeasternequipment.net

Preface

This manual is furnished with each new ***MINUTEMAN® E17/E20/H20***. This provides the necessary operating and preventive maintenance instructions. Operators must read and understand this manual before operating or servicing this machine.

This machine was designed to give you excellent performance and efficiency. For best results and minimal cost, please follow the general guidelines below:

- Operate the machine with reasonable care.
- Follow the manufacturer's suggested maintenance instructions as provided in this booklet.
- Use original Minuteman® supplied parts.

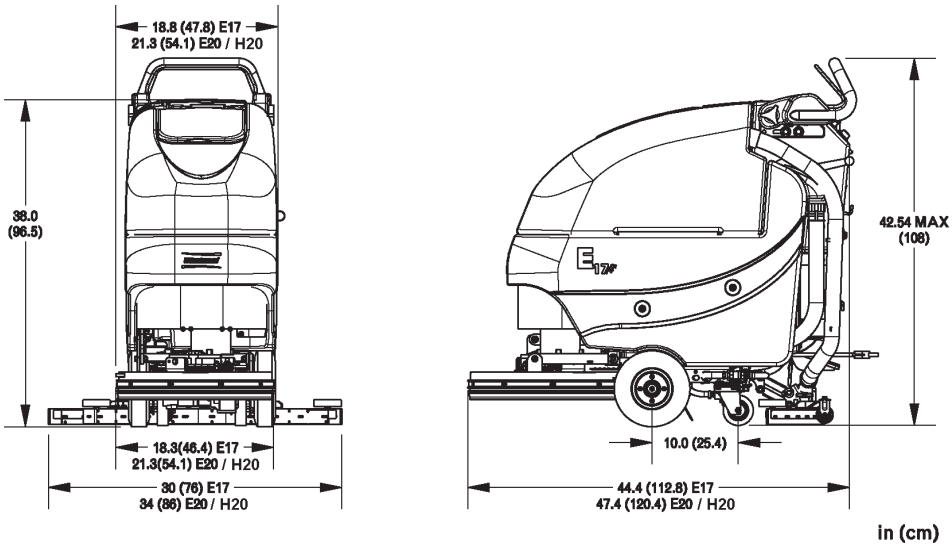

Manufacturer PDF Provided by www.southeasternequipment.net

Technical Specifications

Model ***E17/E20/H20 Traction Drive***

All Models Beginning with: E17TD / E20DTD / H20DTD

	E17TD	E20DTD / H20DTD
Current (Max)	38 amps	40 amps
Battery Capacity (Lead Acid)	140Ah @20 hr	140Ah @20 hr
Battery Capacity (Gel)	95Ah @20 hr	95Ah @20 hr
Sound Level	69 dBA	69 dBA / 65.5 dBA
Cleaning path width	17 in (43 cm)	20 in (51 cm)
Squeegee width	30 in (76 cm)	34 in (86 cm)
Productivity (Traction Drive)	23,188 ft^2 /hr (2,154 m^2)	27,280 ft^2 /hr (2,534 m^2)
Working speed (Traction Drive)	3.1 mph (5 km per hr)	3.1 mph (5 km per hr)
Transport Speed	3 mph (4.8 km per hr)	3 mph (4.8 km per hr)
Rated voltage	24 volts	24 volts
Vacuum flow	65 cfm (110 m^3/hr)	65 cfm (110 m3/hr)
Vacuum waterlift	45 inches (112mbar)	45 inches (112mbar) / 46 inches (115mbar)
Vacuum power	.60 HP (450 W)	.60 HP (450 W)
Brush type	Disc	Disc
Brush motor(s) power	3/4 HP (560W)	3/4 HP (560W)
Number of brushes	1	1
Brush RPM	180 RPM	180 RPM
Aqua-Stop equipped	Available	Available
Solution capacity	12 AGal (45 liters)	12 Gal (45 liters)
Recovery capacity	13 Gal (49 liters)	13 Gal (49 liters)
Working Grade	2%	2%
Weight with batteries	365 lbs (166 kg)	372 lbs (169 kg)
Weight without batteries	231 lbs (105 kg)	238 lbs (108 kg)
Dimensions (LxWxH)	44.4 x 18.8 x 42.3 (112.8 x 47.8 x 107.4 cm)	47.4 x 21.3 x 42.3 (120.4 x 54.1 107.4 cm)
Drive Motor Power	1/5 HP (150W)	1/5 HP (150W)

Manufacturer PDF Provided by www.southeasternequipment.net

Table of Contents

Preface....2
Technical Specifications....3
Safety Instructions....6
Unpacking Instructions....10
Inspection....10
Electrical....10
Batteries....10
Operator Responsibility....10
Machine Overview....11
Machine Overview - Front....11
Machine Overview - Rear....12
Control Panel....13
- Bail Handle....14
- Handle Adjustment Knobs....14
- Key Switch....14
- Direction Switch....14
- Squeegee Lift Lever....14
- Solution Control Lever....14
- Battery / Fault Gauge....14
- Speed Control....14
- Charge Status Indicator....14

Circuit Breakers....15
Battery Compartment....15
Diagnostic Code Guide....16
Optional Hour Meter....16
Rear Squeegee....17
- Cleaning the Squeegee....17
- Changing the Squeegee Blades....17
- Adjusting the Squeegee Blades....18
- Angle Adjustment....18

Adjusting the Squeegee Blades....19
- Height Adjustment....19

Handle Adjustment....20
- Angle Adjustment....20
- Horizontal Adjustment....21

Aqua-Saver Solution Control....22
Solution Tank Drain Hose....23

Manufacturer PDF Provided by www.southeasternequipment.net

Solution Level Indicator.....23
Solution Fill Filter.....24
Screened Float.....25
Screened Float Removal.....25
Recovery Tank Drain Hose.....26
Deck Skirt Removal.....26
In-Line Solution Filter Assembly.....27
Machine Operation.....28
To Turn on Machine.....28
To Turn on Vacuum.....28
To Turn on Brush Motor.....28
To Turn on Cleaning Solution.....28
Direction Switch.....28
Speed Control.....28
Driving.....28
To Charge Batteries.....29
Solution Solenoid.....29
Hour Meter (Optional):.....29
Loading Brush.....30
Unloading Brush.....31
Care - After Use.....32
Maintenance.....33
Troubleshooting.....34
CE Declaration of Conformity.....38

Manufacturer PDF Provided by www.southeasternequipment.net

Safety Instructions

IMPORTANT SAFETY INSTRUCTIONS

Operators must read and understand this manual before operating or maintaining this machine.
Do not operate this machine in flammable or explosive areas.
This machine is designed solely for scrubbing dirt and dust in an indoor environment. Minuteman® does not recommend using this machine in any other capacity.
The following information below may cause a potential hazard to the operator and equipment. Read this manual carefully and be aware when these conditions can exist. Take necessary steps to locate all safety devices on the machine and train the personnel operating the machine. Report any machine damage or faulty operation immediately. **Do not use machine if it is not in proper operating condition.**

FOR SAFETY DURING OPERATION

Keep hands and feet clear of moving parts while machine is in operation.
Make sure all safety devices are in place and operate properly. All covers, doors and latches must be closed and fastened before use.
During operation, attention should be paid to other persons in the work area and especially if small children are present.
Electric motors and components can cause an explosion when operated near explosive materials or vapor. Do not operate this machine near flammable materials such as solvents, thinners, fuels, grain dust, etc.
Store or park this machine on a level surface only. To prevent unauthorized use, machine should be stored or parked with the key removed.
This machine is designed for level operation only. **Do not operate on ramps or inclines greater than 2%**.
This machine is not suitable for picking up hazardous dusts.
Use caution when moving this machine into areas that are below freezing temperatures. Any water in the tanks or hoses can cause damage to the machine.

Manufacturer PDF Provided by www.southeasternequipment.net

FOR SAFETY WHEN SERVICING or MAINTAINING MACHINE

Stop on level surface.
Disconnect the power to the machine by unplugging the red Battery connector located under the recovery tank near the batteries.
Avoid moving parts. Do not wear loose jackets, shirts, or sleeves when working on machine.
Avoid contact with battery acid. Battery acid can cause burns. When working on or around batteries, wear protective clothing and safety glasses. Remove metal jewelry. Do not lay tools or metal objects on top of batteries.
Charging batteries generates explosive gasses.
Do not charge batteries when open flames or sparks are present. Do not smoke.
Make sure the charger is turned off before disconnecting it from the machine.
Charge the batteries in a well-ventilated area with the battery cover removed completely.
Do not clean machine with a pressure washer.
Authorized personnel must perform repairs and maintenance. Use Minuteman® supplied replacement parts.

SAVE THESE INSTRUCTIONS

Manufacturer PDF Provided by www.southeasternequipment.net

This machine was designed with total operator comfort and ease of use in mind. All machine components have been designed as a total system to efficiently clean dirty floors. The machine has two available scrub head types and sizes to fit specific applications. *Please contact your Minuteman® representative for specific recommendations for the correct scrub head type, size, and brush type and chemical applications.*

Before using the machine, always perform the following steps to ensure proper machine operation:

- Check under the machine for leaks.
- Check the rear squeegee for wear and damage.
- Check the solution and recovery tank levels.

After using the machine, always perform the following steps:

- Check the battery charge level.
- Charge batteries if necessary. When charging batteries, extra precaution is required:
- Battery acid can cause burns.
- When working on or around batteries, always wear protective clothing and safety glasses.
- Remove metal jewelry. Do not lay tools or metal objects on top of the batteries.
- Charging batteries generate explosive gasses.

DO NOT CHARGE BATTERIES WHEN OPEN FLAMES OR SPARKS ARE PRESENT. DO NOT SMOKE.

- Charge the batteries in a well-ventilated area.
- Fluid levels should be checked before and after charging and maintained at the proper levels. If low, add distilled water until the metal plates are covered.
- If the machine is not used for an extended period of time, batteries should be kept fully charged with a boost charge once a week.

Manufacturer PDF Provided by www.southeasternequipment.net

- Check for wire, string, or twine wrapped around the scrub brushes.
- Check the rear squeegee for wear and damage.
- Check the rear squeegee suction hose for obstructions.
- Drain and clean the recovery tank and drain hose cap.
- Check under the machine for leaks.
- Check the service records to determine maintenance requirements.

WARNING!
- Be sure you understand the machine controls and their functions.
- While on ramps or inclines, avoid sudden stops when tanks are filled.
- Avoid abrupt sharp turns. Slow down driving speed when going downhill.

Manufacturer PDF Provided by www.southeasternequipment.net

Unpacking Instructions

Inspection

Carefully unpack and inspect your **E17/E20/H20 Walk-Behind Scrubber** for shipping damage. Follow unpacking instructions on shipping pallet. Each unit has been tested and thoroughly inspected before shipment. Any damage is the responsibility of the delivery carrier who should be notified immediately.

Electrical

This machine is battery operated and designed to operate on 24 volts DC (2) 12-volt batteries.

Batteries

We do not recommend mixing AMP hour capacities. Alternate battery sets can be used if they equal physical size and capacity. If alternate battery sets are used please contact Minuteman for on board charger settings.

Operator Responsibility

Read this manual carefully before operating this machine.

The operator is responsible for taking care of the daily maintenance and check ups of the machine to keep it in good working condition. The operator must inform the service mechanic or supervisor when the scheduled maintenance intervals are required as stated in the *MAINTENANCE* section of this manual.

Before starting familiarize yourself with the machine and its controls (see “Machine Overview, Front”, “Machine Overview, Rear”, “Control Console” diagrams).

Manufacturer PDF Provided by www.southeasternequipment.net

Machine Overview

Machine Overview - Front

A	SPRAY BOTTLE / CUP HOLDER
B	SOLUTION FILL PORT
C	RECOVERY TANK LID
D	RECOVERY TANK
E	BRUSH DECK
F	FRONT WHEEL
G	REAR CASTER
H	SOLUTION TANK
J	FLOATING DECK SKIRT

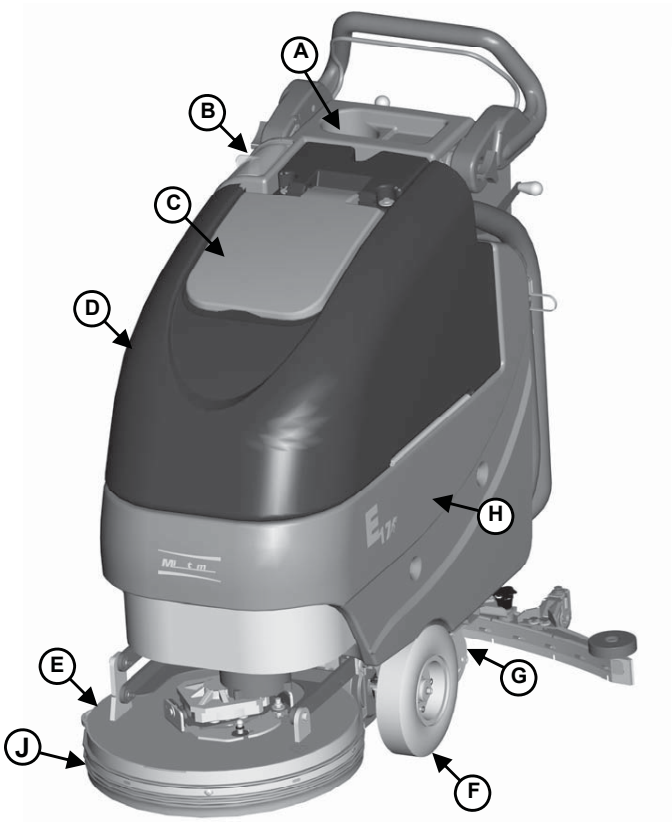

Manufacturer PDF Provided by www.southeasternequipment.net

Machine Overview - Rear

A	BAIL HANDLE	G	RECOVERY HOSE
B	SQUEEGEE LIFT LEVER	H	CONTROL PANEL
C	SOLUTION CONTROL LEVER	I	SOLUTION TANK DRAIN HOSE / LEVEL INDICATOR
D	RECOVERY TANK DRAIN HOSE	J	BRUSH LIFT PEDAL
E	ONBOARD CHARGER CORD	K	REAR SQUEEGEE
F	CIRCUIT BREAKERS	L	DIAGNOSTIC CODE GUIDE

Manufacturer PDF Provided by www.southeasternequipment.net

Control Panel

A	BAIL HANDLE
B	HANDLE ADJUSTMENT KNOB
C	KEY SWITCH
D	DIRECTION SWITCH
E	SQUEEGEE LIFT LEVER
F	SOLUTION CONTROL LEVER
G	BATTERY / FAULT GAUGE
H	SPEED CONTROL
I	CHARGE STATUS INDICATOR

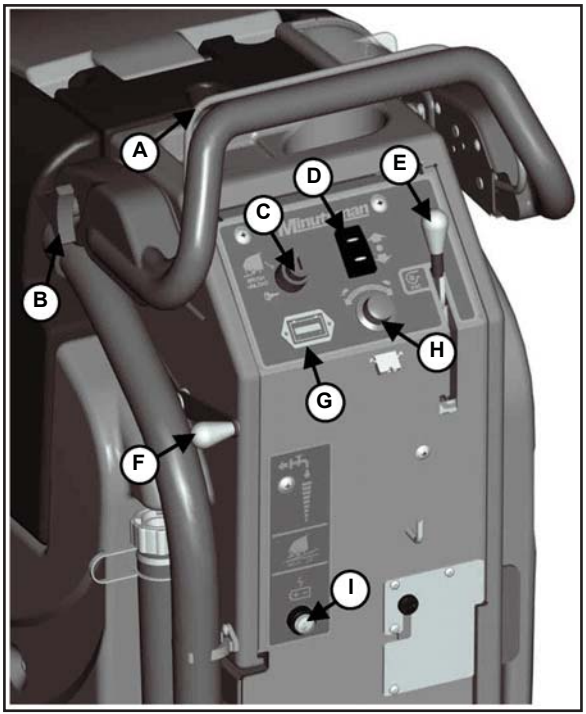

Manufacturer PDF Provided by www.southeasternequipment.net

Bail Handle
(A) When the scrub deck is lowered to the floor, the bail handle enables the brush motor and moves the machine forward once depressed. This also allows the operator to automatically load the brush when the scrub deck is lowered.

Handle Adjustment Knobs
(B) Allows the handle position to be raised or lowered.

Key Switch
(C) Controls the machine's power (Brush Unload/Off/On) with a key for safety. This switch, when turned counter clockwise, operates the auto brush unload when scrub deck is in the raised position. When it is turned to the on position, the machine will operate.

Direction Switch
(D) This switch sets the direction the machine will move when the bail handle is pulled. Forward, Neutral, Reverse.

Squeegee Lift Lever
(E) When actuated to the top position, the squeegee is lowered and the vacuum motor will turn on when bail handle is depressed. When locked in the bottom position, the squeegee is raised and the vacuum motor shuts off after a 10 second delay.

Solution Control Lever
(F) This lever controls the rate at which solution is put down. Moving the lever up will increase the amount of solution. Moving the lever down will decrease the solution rate. Moving the lever all the way down shuts off solution flow.

Battery / Fault Gauge
(G) This gauge displays the remaining battery charge. This gauge also displays any fault codes that might occur with the Drive Motor Controller (see Diagnostic Codes).

Speed Control
(H) This control sets the speed at which the machine will move.

Charge Status Indicator
(I) This gauge displays the status of the batteries during charging. The gauge has a readout of 3 LEDs. 1 Green, 1 yellow, 1 Red. Green indicating a full charge, Yellow indicating 80% charged, Red indicating the batteries are charging.

Manufacturer PDF Provided by www.southeasternequipment.net

Circuit Breakers

The circuit breakers are located at the bottom of the back panel of the machine.

A **Main Control Circuit Breaker - 4A**
B **Brush Motor Circuit Breaker - 30A**
C **Vacuum Motor Circuit Breaker - 20A**
D **Drive Motor Circuit Breaker - 20A**

If any of the functions above are not operating, check if the circuit breaker buttons have tripped. Press to reset.

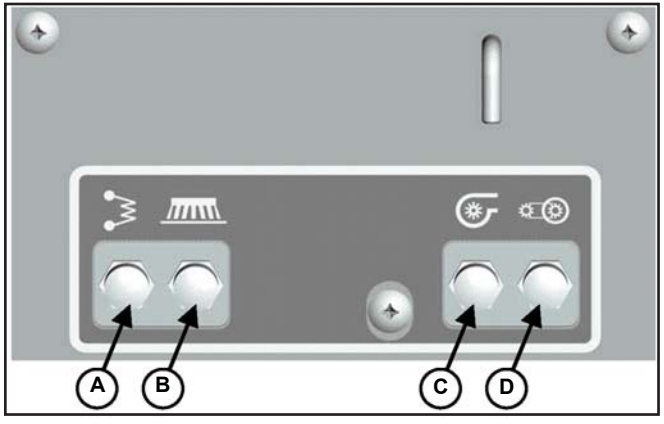

Battery Compartment

The battery compartment is located under the recovery tank. The Battery compartment can be accessed for servicing and maintenance by tilting the recovery tank (make sure recovery tank has been drained before tilting). The battery compartment contains two 12-volt batteries connected in series. Connect the batteries according to the battery connection diagram (*see diagram*). The battery tray may be drained if necessary using the orange drain hose located above the rear caster on the right side of the machine.

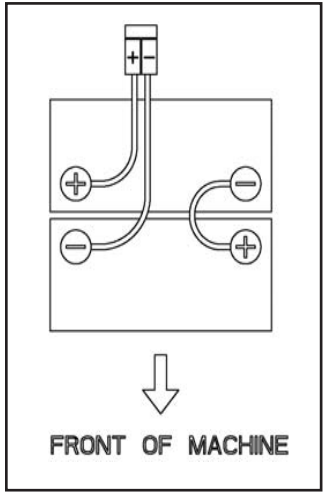

Manufacturer PDF Provided by www.southeasternequipment.net

Diagnostic Code Guide

When an error or fault occurs within the machine, a fault code will appear on the battery gauge represented by a specified number of flashing LEDs. (See “Troubleshooting” for further information)

Diagnostic Codes

The number of flashing bars on the battery gauge represent fault codes as indicated below:

Low Battery Voltage *Check condition of battery and connections*	1
Drive Motor Fault *Check all connections between the motor and controller*	2
Drive Motor Short Circuit *Motor has a short circuit to a battery connection. Contact Service Agent*	3
Battery Lockout *Battery voltage is too low, controller is preventing function. Charge Batteries*	4
Not Used	5
Drive Inhibit *Check battery charger, drive is inhibited when plugged in*	6
Throttle fault *Restart keyswitch-bail handle was activated prior to turning machine on*	7
Drive Controller Fault *Check all connections are secure*	8
Not Used	9
High battery voltage *Check condition of battery and connections*	10

Please refer to manual for detailed trouble shooting information

715699

Optional Hour Meter

Minuteman offers an optional hour meter for this machine. The optional kit replaces the power cord mounting bracket at the rear of the machine with one that contains an hour meter.

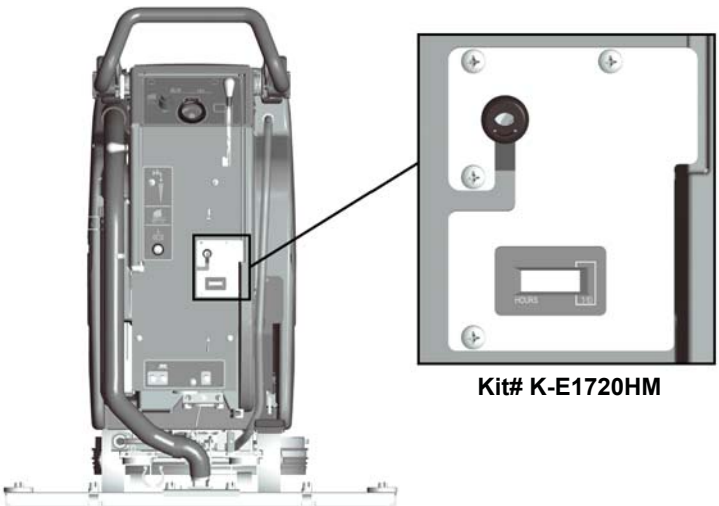

Kit# K-E1720HM

Manufacturer PDF Provided by www.southeasternequipment.net

Rear Squeegee

A Squeegee
B Star-shaped knob
C Adjusting screw for angle adjustment
D Suction hose
E Blade fastening latch
F Washers for caster height adjustment
G Caster Wheel Axle

Cleaning the Squeegee

Check the squeegee **(A)** daily and clean as necessary.
1. Pull off the suction hose **(D)**.
2. loosen the two star-shaped knobs **(B)**.
3. Remove the squeegee **(A)**.

Changing the Squeegee Blades

Check the inner and outer squeegee blades on the squeegee **(A)** weekly for signs of wear. The squeegee blades can be reused by turning them (can be turned for 4 total uses).
1. Pull off the suction hose **(D)**, loosen the two star-shaped knobs **(B)** and remove the squeegee.
2. Unlock the fastening device **(E)** and remove the outer squeegee blade. Turn the squeegee blade or install a new one, as necessary. Change the inner squeegee blade in the same way.

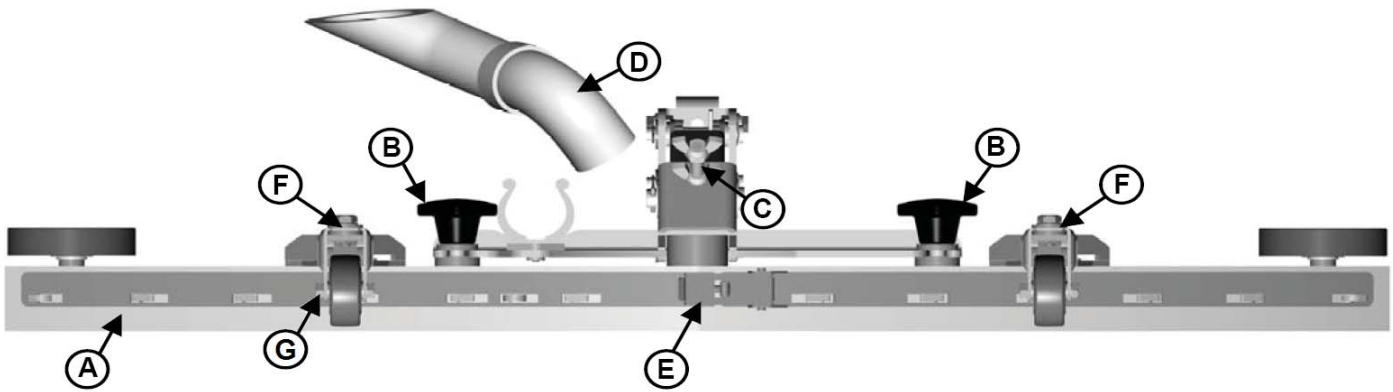

Manufacturer PDF Provided by www.southeasternequipment.net

Adjusting the Squeegee Blades
Angle Adjustment

The angle adjustment is the decisive factor in ensuring that the squeegee blades on the squeegee lie evenly on the floor.

1. Park the machine on a level surface and lower the squeegee.
2. Loosen the lower wing nut **(B)** on the adjusting screw **(A)** and adjust the squeegee using the adjusting screw so that the ends of the squeegee blades still have contact with the floor. By turning the adjusting screw **(A)** counterclockwise, the clearance between squeegee blade and floor is **increased** in the center (Fig. 1). When turning the adjusting screw **(A)** clockwise, the clearance between squeegee blade and floor is **reduced** in the center (Fig. 2).
3. Switch the machine on and check the suction pattern. When the machine is in operation, the entire surface of the squeegee blades (center and outer areas) must be applied as evenly as possible.
4. Tighten the lower wing nut **(B)** on the adjusting screw **(A)** against the metal bracket to lock in the pitch setting.

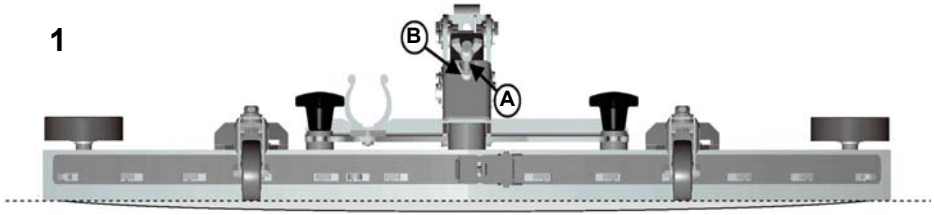

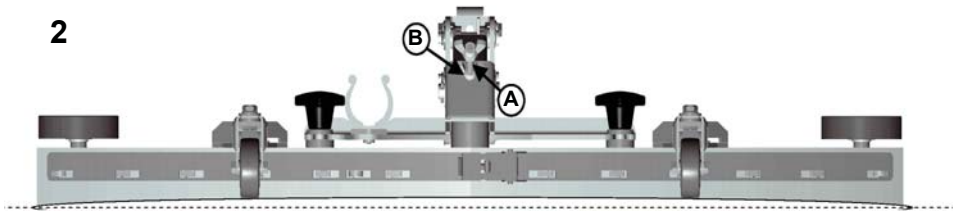

Manufacturer PDF Provided by www.southeasternequipment.net

Adjusting the Squeegee Blades Height Adjustment

If streaks are present, despite an optimum angle adjustment, the clearance between the caster wheels and floor must be adjusted by changing the number of washers underneath the bracket that holds the wheel. The squeegee height is preset at the factory to 2mm.

In cases of uneven floors, e.g. grouted tile, etc., try 3mm illustration for washer configuration. In cases of very uneven floors, e.g. poorly laid tiles (water does not run off) ,, configure as shown in 4mm illustration.

Keep the extra washers by installing them above the bracket as shown.

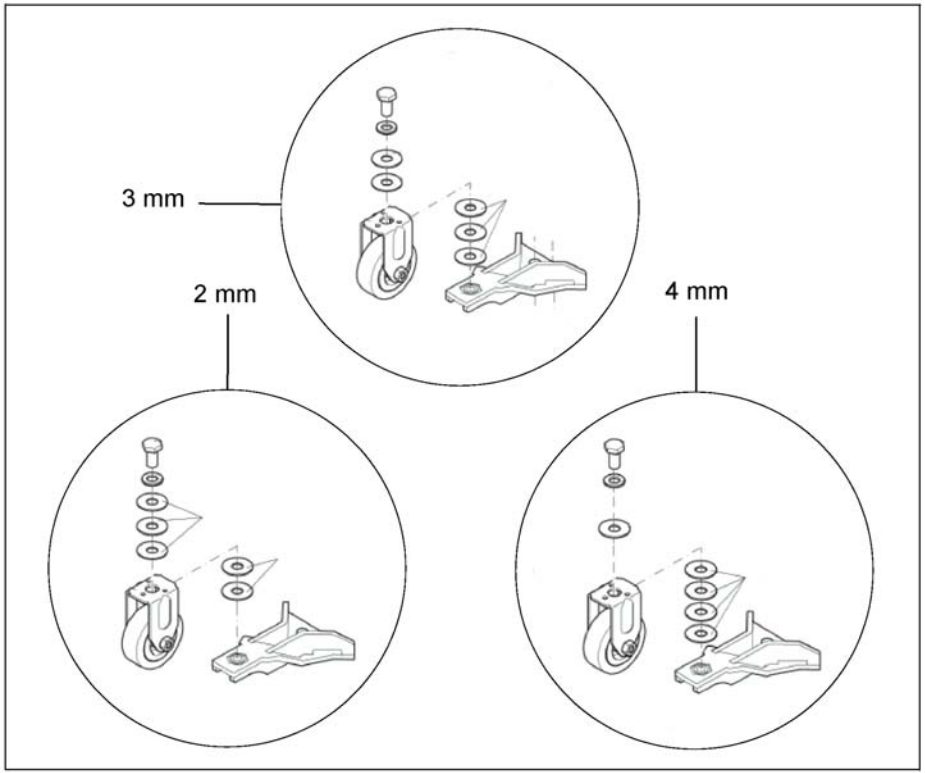

Manufacturer PDF Provided by www.southeasternequipment.net

Handle Adjustment

The handle was designed with operator comfort in mind. The angle and horizontal position of the handle can be adjusted to suit the needs of the operator.

Angle Adjustment

The handle angle can be adjusted without tools by loosening the **Angle Adjustment Knob (A)** on each side and rotating the handle to the desired position. There are 5 angular positions 11.25° apart for a total of 45° between the minimum and maximum position.

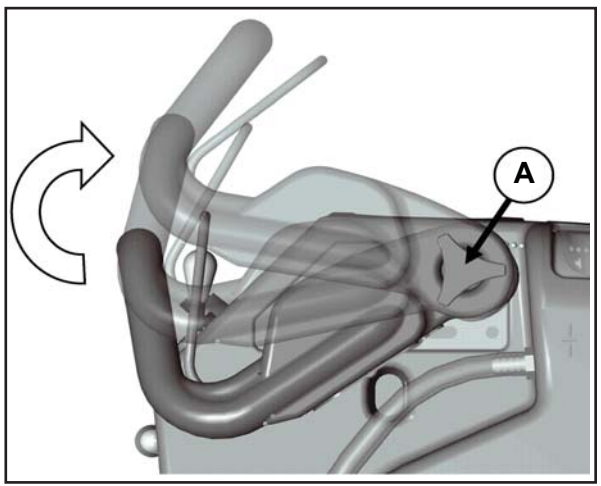

Manufacturer PDF Provided by www.southeasternequipment.net

Horizontal Adjustment

The horizontal position can be adjusted by removing the 4 **Mounting Bolts (B)** (2 each side) with a 9/16" socket and sliding the **Mounting Plate (P)** to one of the 3 available positions. The machine is shipped from the factory in position 1.

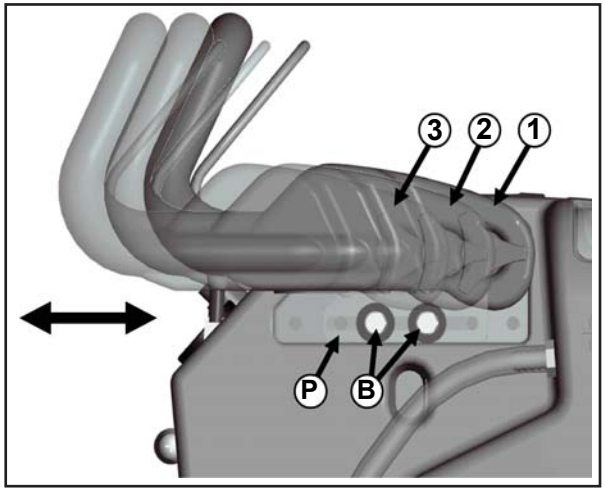

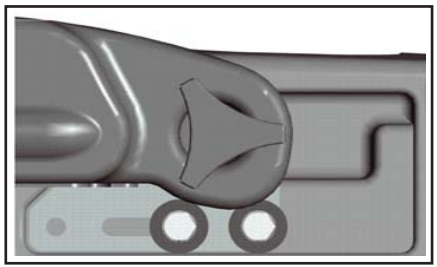

Plate Position 3
(Fully Extended)

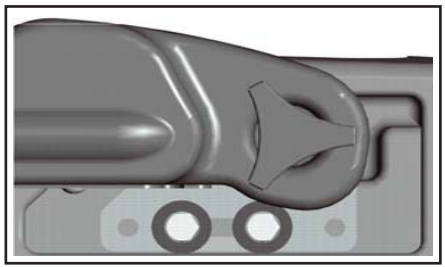

Plate Position 2

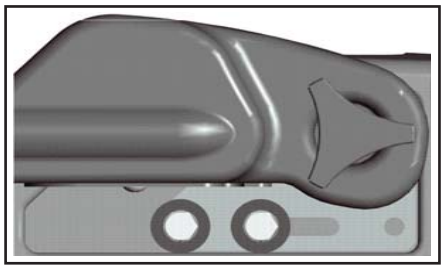

Plate Position 1
(Shipping Position)

Manufacturer PDF Provided by www.southeasternequipment.net

Aqua-Saver Solution Control

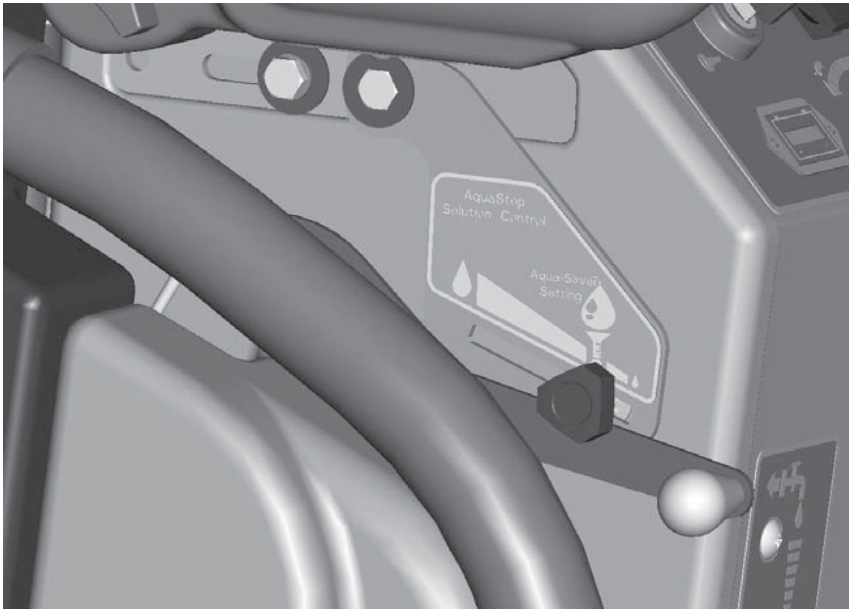

In order to consistently conserve water when using Aquastop brushes, the guide will stop the solution control lever at a low rate setting. This setting may be adjusted by loosening the knob, adjusting the lever, and retightening the knob. Slide the knob all the way forward to dispense maximum solution.

Manufacturer PDF Provided by www.southeasternequipment.net

Solution Tank Drain Hose

The solution tank may be drained by removing the **Solution Tank Drain Hose (A)** from the **Hose Barb (B)** and routing the hose to a floor drain.

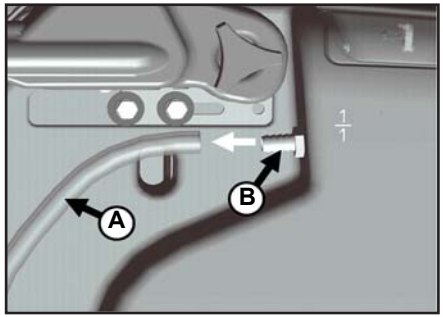

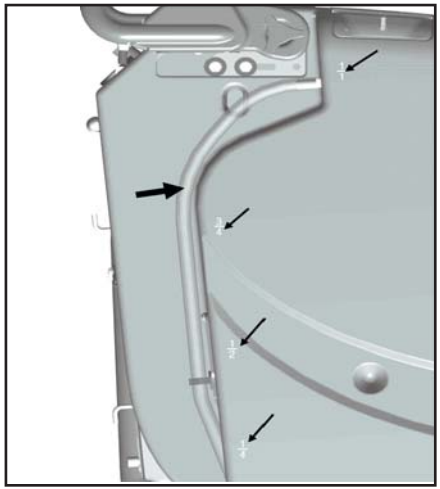

Solution Level Indicator

The Solution Tank Drain Hose also serves as a water level indicator for the solution tank. The amount of water remaining in the solution tank can be seen through the clear drain hose. Level markers molded into the solution tank are positioned at 1/4, 1/2, 3/4, and full levels.

Manufacturer PDF Provided by www.southeasternequipment.net

Solution Fill Filter

The **Solution Fill Filter (B)** should be cleaned regularly. To remove, simply open the **Solution Tank Lid (A)** and pull the filter out.

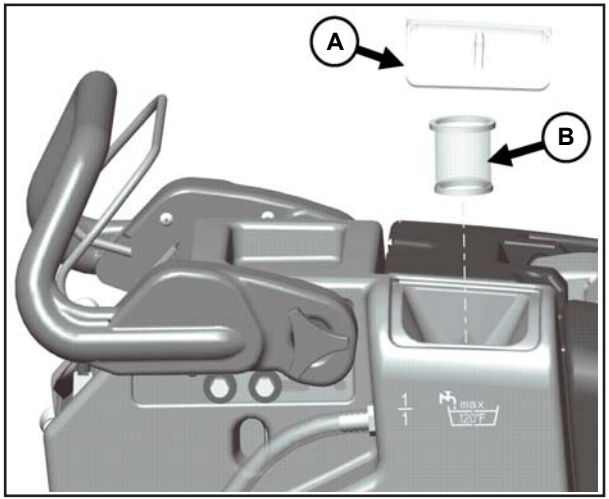

Manufacturer PDF Provided by www.southeasternequipment.net

Screened Float

If the recovery tank **(C)** is overfilled or a large amount of foaming is present, the screened float **(B)** blocks the vacuum intake inside the tank protecting the vacuum motor and internal electronics from water damage. It is essential to keep the float in working order through regular maintenance.

The float should be cleaned daily by thoroughly rinsing with a hose. Removal of the screened float is not necessary for daily maintenance. At least once a month the screened float should be completely removed, cleaned, and checked for any damage to the seal or metal screen.

WARNING: Damage to the machine may occur if operated without the screened float properly in place.

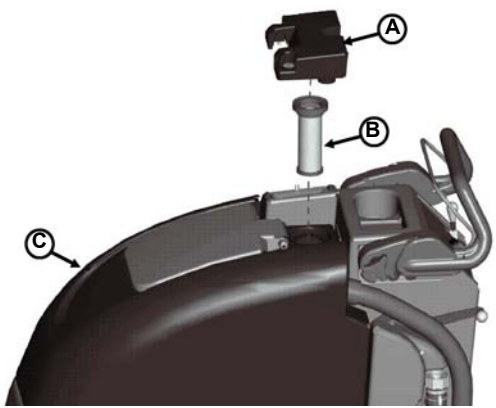

A	**Vacuum Manifold**
B	**Screened Float**
C	**Recovery Tank**
D	**1.5” Bolt**
E	**1.25” Bolt (2)**
F	**Helical Washer (3)**
G	**Flat Washer (3)**

Screened Float Removal

The screened float is positioned between the vacuum manifold **(A)** and recovery tank **(C)**. The screened float **(B)** can be accessed by removing the 1.5” bolt **(D)** and two 1.25” bolts **(E)** that attach the manifold to the recovery tank using a 7/16” socket.

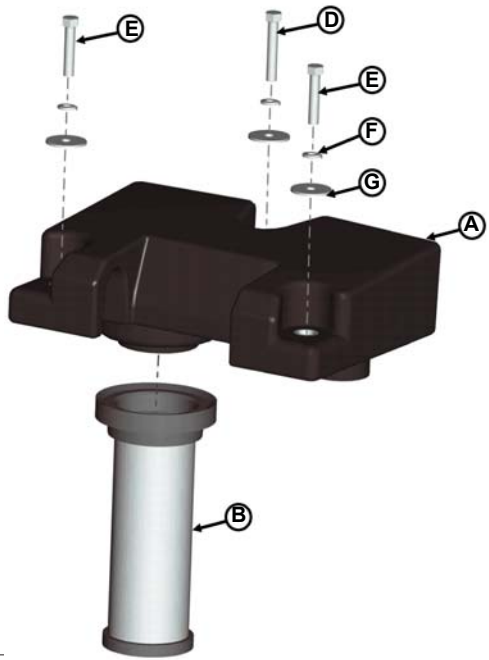

Manufacturer PDF Provided by www.southeasternequipment.net

Recovery Tank Drain Hose

Twist Cap to Open and Drain

Twist & Lift cap to clean out large debris

Deck Skirt Removal

(Do not lower without brush)

CAUTION: Bristles may be damaged if deck is lowered onto floor without brush/pad driver installed.

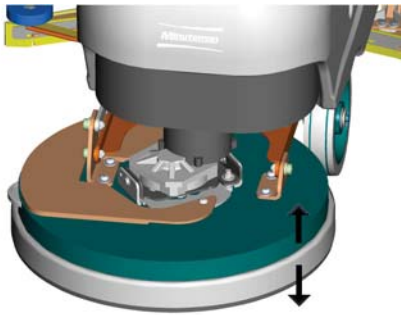

Brush Deck Skirt will ride on the floor in use and float up or down based on amount of pad/ brush remaining.

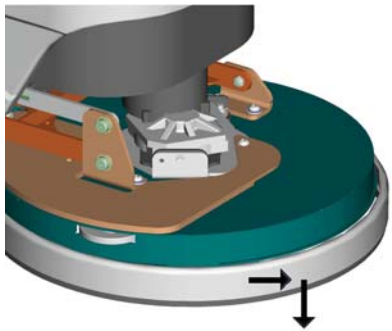

With brush removed & deck raised, Remove skirt for cleaning by pulling forward, then down over the edge of the deck.

Manufacturer PDF Provided by www.southeasternequipment.net

In-Line Solution Filter Assembly

The solution solenoid, which shuts off solution flow when the bail handle is released, is protected from debris by the in-line filter assembly. The filter assembly is located at the rear of the machine on the left hand side, just under the solution tank. It is important to check and clean the screened washer inside the assembly regularly to ensure proper solution flow. To open, unscrew the assembly (Note that the cone of the washer is facing out toward the rear of the machine). Remove washer and rinse, reinsert and screw assembly together, tightening by hand. **Overtightening with tools may damage the plastic threads.**

A **Fitting, MGHT**
B **Screened Washer**
C **Hose Barb Insert**
D **Fitting, FGHT**

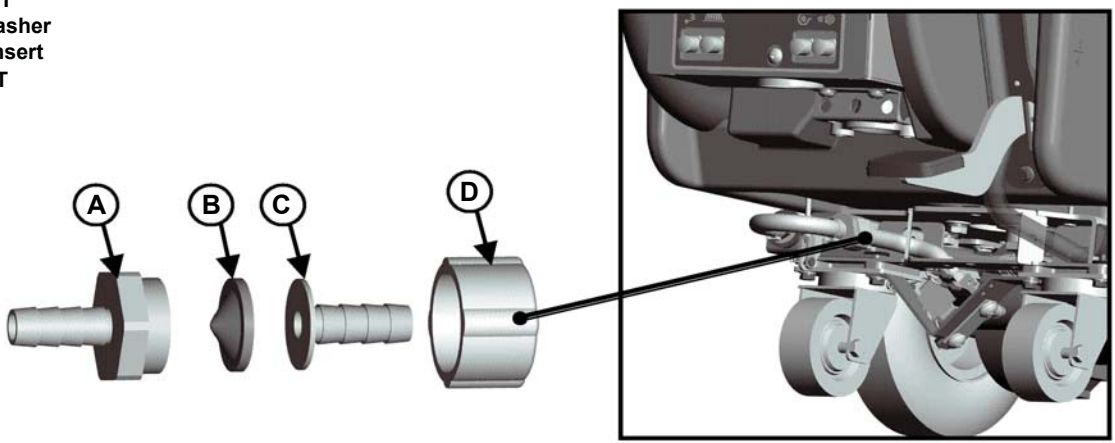

Manufacturer PDF Provided by www.southeasternequipment.net

To Turn on Machine
Turn key to operate position (I). Wait for battery gauge to stop flashing. (If flashing continues, see troubleshooting guide)

To Turn on Vacuum
Lower squeegee into operating position, vacuum motor will turn on when bail handle is depressed.

To Turn on Brush Motor
Lower the scrub deck to the floor by moving the brush lift pedal from the “home” (down) position to the operating position (up). Depress the operator bail handle. Brush motor will turn on.

To Turn on Cleaning Solution
Move solution lever from closed (down) position up to the desired flow position. With the scrub deck on the floor, depress the bail handle, solution will begin to flow.
Note: The solution solenoid will stop solution flow whenever the bail handle is released.

Direction Switch
Select direction of machine by moving the directional rocker switch from the neutral position to the forward or reverse position. The direction of the machine movement is shown on the operator panel with forward and reverse arrows.

Speed Control
Move the speed dial to the desired position. Turning the dial clockwise increases the speed. Turning the dial counterclockwise decreases the speed.

Driving
Depress the operator bail handle, the machine will move in the direction selected.

Manufacturer PDF Provided by www.southeasternequipment.net

To Charge Batteries

When the battery / fault gauge reaches the red zone the batteries need to be recharged. Take the machine to a well ventilated area, unwind the battery charger power cord from the electrical box cover and plug into an appropriate power source. After approximately 10 seconds the battery charge status indicator will turn on.

For Wet batteries only: Check the battery water levels before each use, refill as needed with distilled water.

Caution: DO NOT OVERFILL. Fill water 1/4 " - 1/2" above the separators. Failure to maintain the batteries may result in battery failures.

WARNING: Charging batteries generates explosive gasses. Do not charge batteries when open flames or sparks are present. Do not smoke. Charge the batteries in a well-ventilated area .

Solution Solenoid

Water solenoid will operate when the brush motor is turned on. The solution lever must be moved to the desired operating position, but does not need to be moved to the closed position when stopping for brief periods.

Hour Meter (Optional):

Hour meter will automatically record operating time of the brush motor.

Manufacturer PDF Provided by www.southeasternequipment.net

Loading Brush

1. To load the brush, first center the brush deck over the scrub brush.

2. Lower the scrub deck by releasing the deck lift pedal.

3. With the key turned on, pull the bail handle to engage the scrub brush onto the scrub deck.

Manufacturer PDF Provided by www.southeasternequipment.net

Unloading Brush

1. To unload the brush, first lift the scrub deck by pressing down on the deck lift pedal . Make sure the pedal is in the “home” position shown below.

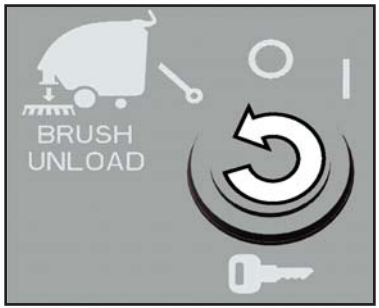

2. Momentarily turn the key (1 to 2 seconds) to the “Brush Unload” position then let the key return to the off (O) position.

3. When done correctly the brush should release from the scrub deck and fall to the floor.

CAUTION: Make sure scrub deck is clear of all personnel and obstructions before operating Brush Unload.

Manufacturer PDF Provided by www.southeasternequipment.net

Care - After Use

After Use

1. When finished scrubbing, lift the scrub deck and turn the solution lever off. Lift the rear squeegee (the vacuum motor will turn off after 10 seconds). Move the machine to a service area for daily maintenance and review items that may need service.
2. Empty the solution tank by disconnecting the **solution tank drain hose** from the barb fitting and routing hose to a drain. Rinse the tank with clean water to prevent any buildup of dried chemicals that could clog the plumbing inside the recovery tank, and the drain hose cap.
3. Empty and clean the recovery tank by flushing with a hose. Be sure to also clean the float shut off screen.
4. Remove the **brushes** or pad holders and rinse them in warm water and hang to dry.
5. Remove the **rear squeegee**, rinse with warm water and reinstall after cleaning.
6. Check the **maintenance schedule** in the next section and perform any required maintenance before storing the machine.
7. Store the machine indoors in a clean dry place. Keep from freezing. Leave solution and recovery tank lids open for ventilation to prevent odor buildup.
8. Turn **Key switch** *OFF* **(O)** and remove key.

Manufacturer PDF Provided by www.southeasternequipment.net

Maintenance

Daily	Weekly	Monthly	Yearly
Charge Batteries	Check Each Battery Cell(s) Water Level	Lubrication – Grease Fittings	Check Carbon Brushes
Check/Clean Tanks & Hoses	Check/Clean brush deck skirt		
Check/Clean the Brush/Pad	Check/Clean Solution Filter		
Check/Clean the Squeegee			
Check/Clean Vacuum Shut-Off Float in Recovery Tank			

Have a qualified service technician check the vacuum motor carbon motor brushes once a year or after 300 operating hours.
The brush motor and transaxle motor carbon brushes should be checked every 500 hours or once a year.
NOTE: Refer to the Service Manual for more detail on maintenance and service repairs.

Regularly scheduled lubrication of certain machine parts should be performed to insure trouble-free operation of the machine.
Apply a generous amount of grease into the fittings on the rear caster swivel (2) until grease seeps out around the bearings.
Apply lubricant or light machine oil to lubricate the:
- *Pivot mounting point of the rear squeegee to the chassis (1)*
- *Rear squeegee caster wheel axle (2)*

Manufacturer PDF Provided by www.southeasternequipment.net

Problem	Possible Cause	Remedy
Poor water pick-up	Worn or torn squeegee blades	Rotate or replace blades
	Recovery tank full	Empty recovery tank
	Recovery tank drain hose leak	Secure drain hose cap or replace
	Recovery tank lid gasket leak	Replace gasket lid cover properly
	Debris caught in squeegee	Clean squeegee
	Vacuum hose clogged	Remove debris and flush hose
	Using too much solution	Adjust solution control lever
	Recovery hose to squeegee or recovery tank disconnected or damaged	Reconnect or replace recovery hose
Poor scrubbing performance	Worn brush	Replace brush or pad
	Wrong brush or cleaning chemical	Consult Minuteman
	Debris caught on scrub brush	Remove debris
	Moving machine too fast	Adjust Speed
	Not using enough solution	Adjust solution flow setting
	Low battery charge	Recharge batteries
	Retaining ring on brush motor shaft not in groove	Remove brush hub assembly and slide ring into groove
Inadequate solution flow or no solution to the floor	Solution tank empty	Fill solution tank
	Solution lines, valves, or filter clogged	Flush lines and clean solution filter.
	Solution Lever in down position	Move lever up
Machine does not operate	Tripped Control Power circuit breaker	Reset Breaker
	Batteries have low charge	Recharge Batteries
	Battery charger operating	Unplug battery charger when charge is complete

Manufacturer PDF Provided by www.southeasternequipment.net

Problem	Possible Cause	Remedy
Vacuum motor does not turn on	Recovery tank full	Empty recovery tank
	Excessive foaming in recovery tank.	Empty recovery tank. Use less or change chemical. Use defoaming agent.
	Carbon Brushes worn	Replace carbon brushes
	Vacuum switch disconnected	Connect wiring
	Tripped vacuum motor circuit breaker	Reset breaker
	Broken vacuum limit switch	Replace switch by squeegee lift lever
	Squeegee in raised position	Lower squeegee
Brush does not unload	Foot pedal not in “home” position	Place pedal in notch
	Tripped brush motor circuit breaker	Reset breaker
	Broken brush motor switch	Replace switch
	Damaged brush block or drive hub	Replace
	Retaining ring on brush motor shaft not in groove	Remove brush hub assembly and slide ring into groove

Charger Warning Indicators		
	LED Status	**Description**
Warning	**RED LED lamp blink once**	Output open circuit or short circuit or reverse polarity connection of charger to battery. Battery voltage is too high (may be connected to wrong voltage battery).
	RED LED lamp blink twice	Abnormal cycle (may be weak or bad battery) Charging time has safety timed out due to battery problem.

Manufacturer PDF Provided by www.southeasternequipment.net

Fault / Diagnostic Codes

The Battery / Fault gauge will flash when a fault is detected. A decal labeled “Diagnostic Codes” is located below the battery gauge as an abbreviated and convenient guide to determine the cause of the fault and the remedy (refer to machine or see “Diagnostic Code Guide” section of this manual). The flashing codes are for the following:

The battery needs charging, there is a bad connection to the battery or dependent on programming, may indicate that the battery lockout function is active and the controller is in a restricted mode of operation. Check the connections to the battery. If the connections are good, try charging the battery.

There is a bad connection to the motor. Check all connections between the motor and the controller.

The motor has a short circuit to a battery connection. Contact your service agent.

The battery charge level has fallen below the Battery Lockout level and the controller is inhibiting certain machine functions. Charge the battery.

Manufacturer PDF Provided by www.southeasternequipment.net

Not used.

The controller is being inhibited from driving, this may be because the battery charger is connected.

The bail handle was activated prior to turning the machine on. Make sure that the bail handle is in the rest position. Restart the key switch.

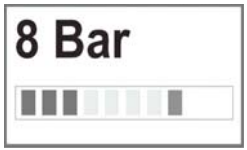

A controller fault is indicated. Make sure that all connections are secure.

Not used.

An excessive voltage has been applied to the controller. This is usually caused by a poor battery connection. Check the battery connections.

Manufacturer PDF Provided by www.southeasternequipment.net

CE Declaration of Conformity

D **EG-Konformitätserklärung** (entsprechend der EG-Richtlinie 2006/42/EG)

GB **EC Declaration of Conformity** (according to Directive 2006/42/EC)

F **Déclaration de conformité pour la CEE** (conforme à la directive de la CEE 2006/42/CEE)

I **Dichiarazione CE di Conformità** (ai sensi della direttiva CEE 2006/42)

E **CEE Declaración de Conformidad** (según la normativa de la CEE 2006/42/CE)

Minuteman International, Inc. erklären in alleiniger Verantwortung, daß das Produkt,
declare under our sole responsibility, that the product,
déclarons sous notre seule responsabilité que le produit,
Dichiara sotto la propria responsabilità che il prodotto,
declaramos bajo responsibilidad propia que el producto,

Machine E17BDCE,E17BDCEUK, E17BDQPCE, E17BDQPGCE, E17TDINT, E17TDQPGINT, E17TDQPINT, E20BDCE, E20BDCE-PC, E20BDQPGCE, E20BDCEUK, E20BDQPCE, E20BDQPCEPLUS, E20CINT, E20CQPGINT, E20CQPINT, E20DTDINT, E26ECOINT, E26ECOQPGINT, E26ECOQPINT, E26ECOSQPINT, E20SQPINT, E20SQPGINT

D auf das sich diese Erklärung bezieht, den einschlägigen grundlegenden Sicherheits- und Gesundheitsanforderungen der EG-Richtlinie 2006/42/EG, sowie den Anforderungen gemäß 2014/30 /EG entspricht. Zur sachgerechten Umsetzung der in den EG-Richtlinien genannten Sicherheits- und Gesundheitsanforderungen wurde(n) folgende Norm(en) und /oder technische Spezifikation(en) herangezogen:

GB to which this declaration relates corresponds to the relevant basic safety and health requirements of the Directive 2006/42/EC, and to the requirements of the other relevant Directives 2014/30 /EC. For the relevant implementation of the safety and health requirements mentioned in the Directives, the following standard(s) and/or technical specification(s) has (have) been respected:

Manufacturer PDF Provided by www.southeasternequipment.net

F faisant l'objet de la déclaration est conforme aux prescriptions fondamentales en matière de sécurité et de santé stipulées dans la Directive de la CEE 2006/42/CEE, ainsi qu'aux prescriptions des autres Directives de la CEE établies dans ce domaine 2014/ 30 /CEE. Pour mettre en pratique dans les règles de l'art les prescriptions en matière de sécurité et de santé stipulées dans les Directives de la CEE, il a été tenu compte de la/des norme(s) et/ou de la/des spécification(s) technique(s) suivante(s):

I é conforme ai requisiti essenziali di sicurezza e di tutela della salute di cui alla Direttiva CEE 2006/42 e sue successive modifiche, nonché ai requisiti di cui alle seguenti Direttive CEE 2014/ 30 . Per la verifica della Conformità di cui alle Direttive sopra menzionate, sono state consultate le seguenti, Norme Armonizzate EN:

E al cual se refiere la presente declaración corresponde a las exigencias básicas de la normativa de la CEE 2006/42/CE y referentes a la seguridad y a la sanidad, asi como a las exigencias de la demás normativas de la CEE 2014/ 30 /CE. Con el fin de realizar de forma adecuada las exigencias referentes a la seguridad y a la sanidad mencionadas en las normativas de la CEE fué(ron) consultada(s) la(s) siguiente(s) normativa(s) y especificación(es) técnicas(s):

EN 60335-1, EN60335-2-72, EN55012, EN55014-2

Date February 8, 2018

Jack Hill
Managing Director

Name der autorisierten Person, die für Minuteman die technischen Unterlagen zusammenstellt:
Name of the person authorized for Minuteman to compile the technical file:
Personne chargée du suivi du dossier technique:
Nome della persona autorizzata da Minuteman a compilare il file tecnico:
Nombre de la persona autorizada por Minuteman para la creación del fichero técnico: **Sébastien Filippone**

D, GB, F, I, E

Manufacturer PDF Provided by www.southeasternequipment.net

Minuteman®

“More Than Just Clean”

Minuteman is a Full Line Manufacturer of Sweepers and Scrubbers, for Industrial Facilities.

Minuteman,Inc.
A member Of The Hako Group

988721UM
988026UM REV F 11/22