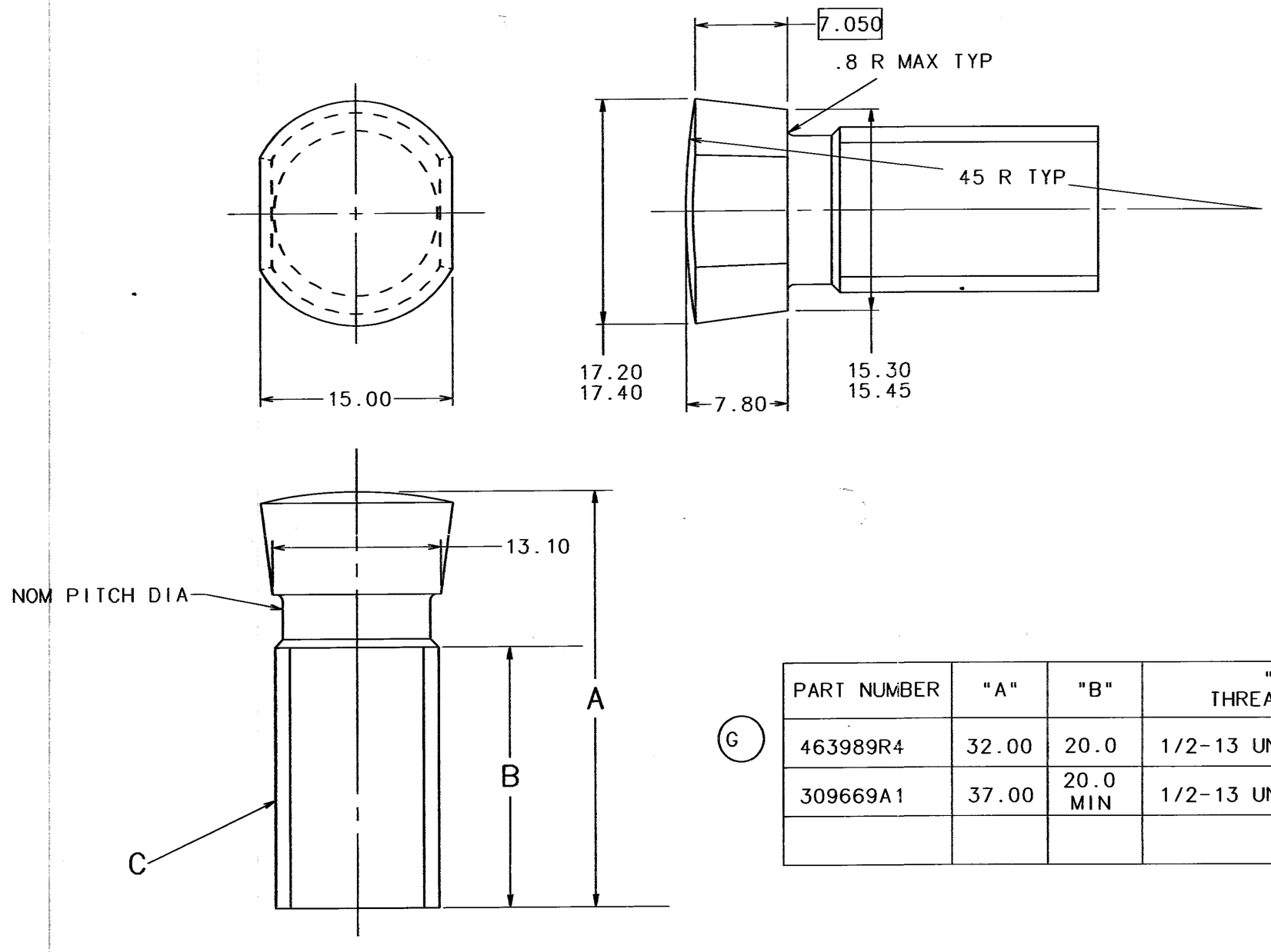

SINGLE LETTER OR MFG SYMBOL
HEAD MARKING PREMISSIBLE
MAX RAISED HEIGHT-0.25
MAX LETTER HEIGHT- 3

MAXIMUM CORNER RADII OF .8
IS PERMISSIBLE

HEAD DIMENSIONS ARE MEASURED
AT THEIR INTERSECTIONS

ZN PLATE PER CASE MS201
CLASS 5A OR 5B
PARTS MUST BE BAKED TO PREVENT
HYDROGEN EMBRITTLEMENT.

G

PART NUMBER	"A"	"B"	"C" THREAD TYPE
463989R4	32.00	20.0	1/2-13 UNC-2A-LH
309669A1	37.00	20.0 MIN	1/2-13 UNC-2A-LH

KC KEY CHARACTERISTIC — NO. OF KC'S

THE KEY CHARACTERISTIC SYMBOL IDENTIFIES DRAWING FEATURES REQUIRING PROCESS CAPABILITY DEMONSTRATED TO A CASE CO. SPECIFIED MINIMUM PER CORPORATE POLICY AND PROCEDURE 4-133. ALL FEATURES SHALL BE WITHIN SPECIFIED LIMITS.

OTHER RELEASE NUMBER	ENGINEERING CONTROL RELEASE NUMBER	REV LTR	CHANGES	BY	DATE	CHK
	C040334	G	REINSTATED 463989R4	TDB	28MAY04	JRK
	C981747	F	WAS (1)7.90<5E> (2)15.3/15.6 <4D>	TDB	01DEC98	
	C981747	F	REFORMATTED	TDB	01DEC98	

METRIC
UNLESS OTHERWISE SPECIFIED:
DIMENSIONS ARE IN MILLIMETRES
SURFACE ROUGHNESS IN MICROMETRES Ra

METRIC TOLERANCES UNLESS OTHERWISE SPECIFIED
WHOLE NUMBERS ±1.5 | TWO PLACE DECIMALS ±0.25
ONE PLACE DECIMALS ±0.8 | ANGULAR DIMENSIONS ±2°

GEOMETRIC DRAWING SYMBOLS
USAGE OF SYMBOLS AND MODIFIERS SHALL CONFORM TO CASE DRAWING STANDARDS-A5

THIRD ANGLE PROJECTION — MODEL

APPROXIMATE MASS Kg

SYSTEM CAD | SIZE A2

THIS PRINT AND THE INFORMATION CONTAINED HEREON IS A CONFIDENTIAL DISCLOSURE. THE SUBJECT MATTER OF WHICH IS THE PROPERTY OF THE CASE CORPORATION AND ITS SUBSIDIARY NAMED HEREON.

CASE CASE CORPORATION
700 STATE STREET
RACINE, WI 53404 USA

ENGRG. CONTROL — CAGE 10988

INTERNATIONAL OPERATION — CACS NO.

PART NOUN - DESCRIPTION
BOLT, 1/2
SPECIAL PLOW

MATERIAL ES-B7008

DRAWN BY KBR DATE 28JUN84
MATERIAL BY DATE
CHECKED BY DATE
APPROVED BY DATE

REFERENCE NO. — SCALE 4:1 — SHT OF

PART NO. FZG 18725 — CODE

F3808

DATE=Tue 01 Jun, 2004 01:33:13 PM
COGTN'TB=v8261