Manufacturer PDF Provided by southeasternequipment.net

Pioneer Eclipse
An AMANO Company

SAFR TECHNOLOGY

Propane Hard Floor Machine
PE420GP
Operator's Manual

Instructions For Use

Failure to read and understand this manual before operating this machine or performing service on this machine may result in injury to the operator or nearby personnel or result in damage to the machine or nearby property. Each operator must be trained in the operation of this machine before being allowed to use it. Contact Amano Pioneer Eclipse Customer Service at 1-800-367-3550 or +1-336-372-8080 or an authorized Amano Pioneer Eclipse Distributor to inquire about training or to request a replacement manual.

NOTICE

Proper maintenance is necessary with all propane powered floor machines. Following the scheduled maintenance procedures found in your operation manual will provide many years of uninterrupted service.

Pioneer Eclipse
An AMANO Company

In addition to the scheduled maintenance procedures listed it is recommended to have your machine serviced by certified service personnel every three months. This service should include an emissions check.

DANGER! For your safety, if you smell propane:

1. **Extinguish any open flame.**
2. **Open window.**
3. **Do not touch electrical switches.**
4. **Immediately call your propane supplier.**

DANGER! Do not store or use gasoline or other flammable vapors and liquids in the vicinity of this or any other appliance.

Record This Important Information

Date of Purchase _____

Purchased From _____

Address _____

City_____ State_____ Zip _____

Phone _____ Contact _____

Machine Model _____

Machine Serial Number _____

Important Phone Numbers

Medical Emergency _____

Police _____

Fire Department _____

In this Operation Manual you will find three statements that you must read and observe to ensure safe operation of this machine.

DANGER! indicates that the possibility of severe bodily injury or death can occur if DANGER! statements are ignored. Read and observe all DANGER! statements included in the Operation Manual and attached to the machine.

WARNING! indicates that the possibility of bodily injury to the operator and other people can occur if WARNING! statements are ignored. Read and observe all WARNING! statements included in the Operation Manual and attached to the machine.

CAUTION! indicates that the possibility of damage to the machine or other property can occur if CAUTION! statements are ignored. Read and observe all CAUTION! statements included in the Operation Manual and attached to the machine.

Table of Contents

Quick Reference Specifications....6
Safety Precautions....7
Refueling and Storage of Fuel Cylinders....9
Operator Responsibility....9
Canadian Safety Requirements....10
Test for Operator-Ear Sound Pressure Level....11
Test for Hand Arm Vibration....11
Machine Preparation....12
- Unpacking the Machine....12
- Filling the LP Cylinder....12
- Installing the LP Cylinder....12
- Controls and Instruments....13
- Ignition Switch....14
- Clutch Switch Lever....14
- Engine Throttle....14
- Hour Meter/Tachometer....14
- EcoSense Emission Monitioring....15
- Fuse....17
- Soution Control Switch....16
- Soution Control Valve....16
- Soution Tank Drain Valve....16
- Handle Adjustment....16
- Rok-Bak....17
- Wheel Adjustment....17
- Pad Change....18
- Level-S Diamond Pads....18
- Head Change (HD Model)....19
- 3” Diamonds (HD Model)....19
- Weight Plates (HD Model)....20
- Dust Collection (HD Model)....20
- Solution Tank....21

How the Machine Works....22
Pre-Operation Checklist....22
LP Fuel Cylinder....22
Installing the LP Fuel Cylinder....22
Starting the Machine....23
Idling and Stopping the Machine....23
Burnishing....23
Grinding and Polishing....24
Machine Troubleshooting....25
Maintenance....26
- Scheduled Maintenance Chart....26
- Oil Level Inspection....26
- Oil Change....27
- Oil Filter Replacement....27
- Spark Plug Inspection and Replacement....28
- Air Filter Inspection and Replacement....28
- Engine Dust Filter....29
- Valve Clearance & Re-torque Heads....29
- Valve Seating....29
- Head Bolt Maintenance....29
- Cooling Fin Maintenance....29
- Inspect Fuel Hose and Connections....29
- Inspect Pad and Pad Holders....30
- Belt Maintenance....30
- Belt Replacement....31
- Battery Maintenance....32
- Machine Storage....32
- Repacking the Machine....32
- Transporting the Machine....32

Machine Specifications....33
Parts Manual....34
- Electrical Schematic....35
- Connections....36
- Engine Assembly....38
- Deck Assembly....40
- Handle Assembly....42
- Main Assembly....44
- Main Assembly (HD)....46
- Regulator & Solenoid Assembly....48
- Tank & Controls Assembly....50
- Skirt, Driver, & Pad Holder....52
- Diamonds & Diamond Pads....54

Small Off Road Engine Certification Warranty....55
Manufacturer’s Warranty....56
Safety Awareness Form....57

Quick Reference Specifications:

Capacities:

- Engine Oil:
  - Filter not removed: 1.6qt. (1.5L)
  - Filter removed: 1.8qt. (1.7L)
  - Engine Oil Type: SAE30 with API Service Classification SH or SJ

Routine Maintenance Parts:

- Engine Dust Filter: MP371300
- Engine Oil Filter: KA490657007
- Engine Primary Air Filter (Paper Element): KA110130752
- Engine Air Pre-Cleaner (Foam Element): KA110137046
- Spark Plug: KA920702112
- Battery: MP362200
- Drive Belt: MP8080
- Fuses: SS2570 (20A)
  MP043000 (7.5A)
- LP Cylinder: MP105900 (Steel)
- Driver / Pad Holder:
  21” Pad Holder: MP446300
  21” Diamond Disc Driver: MP463200
  21” Level-S Pad Adapter: MP392600
- Skirt: MP382600

Your Authorized Amano Pioneer Eclipse Distributor: _____

Authorized Amano Pioneer Eclipse Distributor Phone Number: _____

Amano Pioneer Eclipse Phone Number: +1-336-372-8080

Safety Precautions

Anyone operating the machine should read the following carefully and be informed of potentially dangerous operating conditions. Operators should be familiar with the location and use of all safety devices on the machine. Do not use the machine if it is not in proper operating condition, and report any damage or operation faults immediately.

DANGER! Operate this machine in a well-ventilated area. It is the responsibility of the machine operator, machine owner, and the site manager to ensure that the air exchange system where the machine is to be used is in compliance with local building codes and is operating properly. Failure to operate this machine in a well-ventilated area could lead to sickness, injury, or death from carbon monoxide (CO) exposure.

DANGER! This machine emits CO, which is colorless, odorless, non-irritating gas. The first symptoms of CO exposure include headache, drowsiness, dizziness, and nausea. If you should experience any of these symptoms while operating the machine, shut off the machine and go outside to get fresh air. Have the machine tested for CO emissions by a qualified service technician before using it again.

DANGER! Prolonged or high exposure to CO may result in vomiting, confusion, and collapse in addition to loss of consciousness and muscle weakness. If such symptoms occur, call 911 for emergency medical attention. If you have experienced these symptoms, **DO NOT** operate this machine or any other propane machine again until cleared by a physician. Excessive exposure to CO can result in death.

DANGER! Propane is a highly flammable fuel. If you smell propane, shut off the machine immediately and take it outside the building. **DO NOT** use the machine again until a qualified service technician has corrected the propane leak. **DO NOT** use or allow another person to use an ignition source such as a cigarette lighter near the propane machine. **DO NOT** smoke near the propane machine. **DO NOT** vent a propane cylinder inside a building. **DO NOT** store propane cylinders inside a building.

DANGER! This machine has parts, including the pad assemblies, that can cause severe injury if these parts are contacted while they are moving. **DO NOT** allow any part of the body or clothing to come in contact with these parts while they are moving. **DO NOT** try to change attachments while the machine is running. **DO NOT** allow other people to come near the machine while it is in operation. **DO NOT** allow the machine to run unattended. **DO NOT** leave the machine in a place where unauthorized or untrained personnel could use the machine. **DO NOT** run the machine with the pad off center, damaged or missing. **DO NOT** run machine with unsecured guards and shields. **DO NOT** operate the machine if the machine has loose parts.

DANGER! Federal law and California State law prohibits the following acts or the causing thereof: (1) the removal or rendering inoperative by any person other than for purposes of maintenance, repair, or replacement, of any device or element of design incorporated into any new engine for the purpose of emission control prior to its sale or delivery to the ultimate purchaser or while it is in use, or (2) the use of the engine after such device or element of design has been removed or rendered inoperative by any person.

Among those acts presumed to constitute tampering are the acts listed below: **DO NOT** tamper with the original emission related part.

- Throttle body and internal parts
- Spark plugs
- Magneto or electronic ignition system
- Air cleaner elements
- Crankcase
- Cylinder heads
- Breather chamber and internal parts
- Intake pipe and tube
- Regulator
- Fuel lock-off

WARNING! Overfilled or liquid withdraw cylinders can damage the fuel system and create a fire hazard. **DO NOT** overfill the cylinder or use a liquid withdraw cylinder on the machine. If the regulator freezes stop the burnisher and take the cylinder outside. Inspect cylinder, if a vapor withdraw cylinder, use gloves or pliers to open bleeder valve and purge cylinder until only vapor is escaping. If it is a liquid withdraw cylinder, replace with a vapor withdraw cylinder. Both cylinders are shown below.

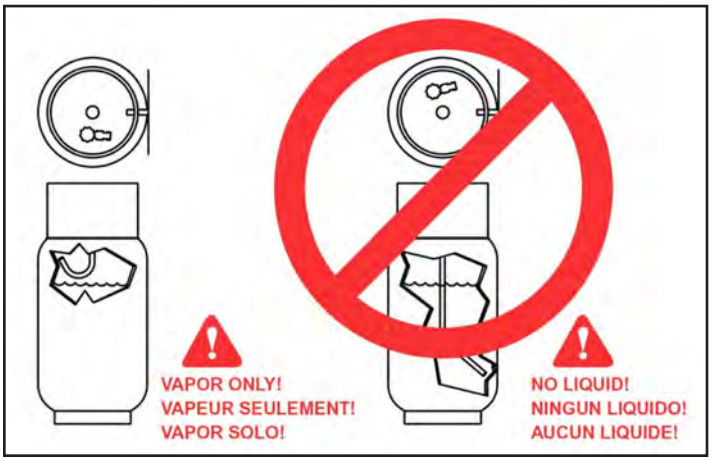

WARNING! Modifications or alterations to this machine can lead to personal injury or damage to the machine. **DO NOT** make unauthorized modifications or alterations to this machine. Amano Pioneer Eclipse assumes no liabilities for injury or damage resulting from an unauthorized modification or alteration to the machine. Any unauthorized modification or alteration to this machine voids all warranties.

WARNING! The muffler and the engine become hot enough while the machine is in operation, and for a long time after the machine is shut off, to cause severe burns. **DO NOT** touch these parts of the machine until they have cooled.

WARNING! Injury can occur to the eyes and body while using the machine. Safety goggles, safety shoes, and safety clothing are recommended while operating the machine.

WARNING! Continuous exposure to high noise levels can cause hearing loss. Hearing protection is recommended while the machine is in operation.

WARNING! Machine vibration may cause tingling or numbness in the fingers or hands. Gloves are recommended to reduce machine vibration. If tingling or numbness persists, shut off the machine. If the vibration is caused by loose parts, adjust or tighten these parts before using the machine again.

CAUTION! A dirty engine filter can cause overheating. Check and replace following recommended maintenance schedule.

CAUTION! Overheating can be caused by insufficient or low oil. Check oil before each use, and fill or change as needed.

CAUTION! Never over-fill engine with oil. Over-filling could cause irreparable damage to the engine.

CAUTION! Overheating can be caused by dirty oil. Check oil before each use and change regularly following recommended maintenance schedule.

CAUTION! Do not engage starter for more than 5 seconds. Allow a 10 second cool-down period for second failed start-up attempt.

CAUTION! Perform all recommended scheduled maintenance. Regular maintenance of your propane powered floor machine is necessary to keep it in safe working condition.

CAUTION! **DO NOT** operate machine unless trained and authorized. **DO NOT** operate machine unless you have read and understand the operation manual. **DO NOT** operate machine in flammable or explosive areas.

CAUTION! Before starting machine ensure all safety devices are in place and functioning properly. Before starting machine check for proper operation.

CAUTION! When using machine, go slowly on inclines or slippery surfaces. Use care when operating machine in reverse.

CAUTION! When servicing machine, stay clear of moving parts. **DO NOT** wear loose clothing when working on machine. Block machine wheels before raising or jacking up machine. Use hoist stands that will support the weight of the machine. Wear eye and ear protection when using pressurized air or water. Disconnect battery connections before servicing machine. Use only replacement parts supplied by Amano Pioneer Eclipse or a Amano Pioneer Eclipse Authorized Distributor or Service Center.

CAUTION! When loading or unloading machine onto or off a truck or trailer, turn machine OFF. Only use a truck or trailer that will support the weight of the machine to transport. **DO NOT** push the machine onto or off a truck or trailer unless the load height is 15 in (380mm) or less from the ground. Block machine wheels when transporting. Tie the machine down securely to truck or trailer when transporting.

This machine is manufactured for commercial use only.

This machine is designed and manufactured for indoor use in burnishing wax coated hard floor surfaces. Amano Pioneer Eclipse does not recommend use of this machine in any environment other than an indoor environment. This propane powered floor machine is designed and manufactured for commercial floor burnishing only. This machine is designed to burnish most modern types of floors including composition tile, stone, marble, terrazzo, and resilient floor covering, and some coated wood floors. Even though NFPA 11.13.2.3 says..."the use of floor maintenance machines in buildings frequented by the public, including the times when such buildings are occupied by the public, shall require the approval of the authority having jurisdiction." Amano Pioneer Eclipse suggests usage when occupancy of a given work area is minimal.

These machines should not be used

- In nursing homes, hospitals, day-care centers, etc. that are occupied.
- By unqualified or untrained personnel.
- Unless properly maintained and adjusted.
- On areas with obstructions such as thresholds, floor outlet boxes, etc.
- In areas where loose debris or other objects are present.
- In rooms and areas without proper ventilation.

Operator Responsibility

The operator is responsible for performing the recommended daily maintenance and checkups of the machine to keep it in good working condition. The operator must inform the service mechanic or supervisor when recommended maintenance procedures are required as described in the *"MAINTENANCE"* section of this manual.

- Read this manual carefully before operating this machine.
- FOR SAFETY: **DO NOT** operate machine before reading and understanding the operation manual.
- Check the machine for shipping damage.

Keep your machine regularly maintained by following the maintenance information in this manual. Order parts and supplies only from an Authorized Amano Pioneer Eclipse Distributor. Use the parts illustration section of your manual when ordering parts. During and after operation, perform the recommended daily and hourly procedures outlined in the Maintenance Chart.

Refueling and Storage of Fuel Cylinders

This machine uses a 20lb (9.1kg) capacity aluminum or steel cylinder, which meets the DOT 4E240 standards. These cylinders are also listed by UL. In addition, the steel cylinder meets European TPED specifications and is CE compliant. Filling should be done ONLY by a qualified propane dealer. FILL THROUGH THE SERVICE VALVE ONLY. A properly filled cylinder should not exceed 80% of the rated capapcity.

DO NOT attempt cylinder repair. Return the cylinder to your propane dealer if repair is necessary. Please note that DOT regulations prohibit shipping of cylinders after the cylinder has been filled with propane. When not in use, cylinders should always be stored outside in an upright position in a secure, tamper-proof, steel mesh storage cabinet. The cabinet may be located next to the building, but with at least five feet (1.5 m) of space between the cabinet and the nearest building opening (door or window). The cylinder to be used on this machine is a vapor withdraw cylinder. **A liquid withdraw cylinder is not to be used with this machine.** The use of a liquid withdraw cylinder on a vapor withdraw system could freeze the regulator and create a fire hazard. The National Fire Protection Association (NFPA) Standard for Storage and Handling of LP Gas is the appropriate authority for safe propane use. A copy of this publication is available through the National Fire Protection Association (1-800-344-3555) or www.NFPA.org.

Canadian Safety Requirements

1. A sign indicating “NO SMOKING” shall be permanently displayed at the storage area. The sign shall be in accordance with the sign required in Clause 10.12.3 of CAN/CGA-B149.2-M91, Propane Installation Code.
2. When the cylinder is attached to the floor maintenance machine for use, the operator shall not leave the unit unattended except for short periods of time such as rest stops, washroom, or meal stops.
3. The requirements of 1.10.1 (e) and (g) do not apply in industrial buildings.
4. A floor maintenance machine shall only be used in buildings:
   a. Provided with continuous mechanical ventilation that removes products of combustion to the outdoors of not less that 300 CFM for each 10,000 BTU-hr or fraction thereof.
   b. Provided with natural ventilation of not less than 300 CFM for each 10,000 BTU-hr input or fraction thereof, based on a maximum of one-quarter-air exchange per hour for the net building volume.
5. The owner of a floor maintenance machine shall ensure that the operator has participated in a course authorized by the manufacturer of the unit on the safe handling of propane and the safe operation of the machine.
6. The owner of a floor maintenance machine shall ensure that the unit is maintained in accordance with the manufacturer’s recommended maintenance procedures in a safe operating condition and the owner shall maintain a record of the maintenance for a period of two years.
7. Before transporting a floor maintenance machine, the cylinder shall be securely fastened with the system valve closed, and the cylinder shall be located in a well-ventilated space.

Exigences de sécurité pour le Canada

1. Un panneau indiquant “ INTERDICTION DE FUMER“ doit être affiché en permanence dans la zone de stockage. Il doit être conforme au panneau exigé par la Clause 10.12.3 du CAN/CGA-B149.2-M91, Code installation propane.
2. Lorsque le cylindre est fixé à la machine d’entretien des sols pour son utilisation, l’opérateur ne doit pas laisser l’unité sans surveillance, sauf pour de courtes périodes, notamment pour faire une pause, aller aux toilettes ou au moment des repas.
3. Les conditions du 1.10.1 (e) et (g) ne s’appliquent pas aux bâtiments industriels.
4. Une machine d’entretien des sols ne doit être utilisée que dans les bâtiments suivants :
   a. Équipés d’un système de ventilation mécanique ininterrompu, capable d’évacuer les produits de combustion vers l’extérieur, non inférieur à 300 CFM pour chaque 10 000 BTU/h ou une fraction de ce dernier.
   b. Équipés d’un système de ventilation naturel non inférieur à 300 CFM pour chaque 10 000 BTU/h ou une fraction de ce dernier, basé sur un maximum d’un quart d’air échangé par heure pour le volume net du bâtiment.
5. Le propriétaire d’une machine d’entretien des sols doit s’assurer que l’opérateur a participé à une formation habilitée par le fabricant de l’unité, relative à la manipulation sûre du propane et de la machine.
6. Le propriétaire d’une machine d’entretien des sols doit s’assurer que l’unité bénéficie d’un entretien conforme aux procédures de maintenance recommandées par le fabricant dans des conditions d’utilisation sûres. De plus, il doit tenir un registre de la maintenance sur une période de deux ans.
7. Avant de transporter une machine d’entretien des sols, le cylindre doit être fixé de manière sûre avec le système de soupapes fermé. De plus, il doit se trouver dans un espace bien ventilé.

Test for Operator-Ear Sound Pressure Level

Amano Pioneer Eclipse measures and rates the operator-ear sound pressure level for hand-guided floor treatment and floor cleaning machines for industrial use. All tests are performed in accordance with European Machinery Directive (2006/42/EC).

- Outdoor test area consists of a flat open space free from effects of signboards, buildings or hillsides for at least 15 m (50 ft) from the center of the test surface. Indoor tests are conducted in a semi-anechoic or sound deadening room.
- The test surface is a single sheet of floor covering at least 1 m (3.3 ft) wider and longer than the equipment being tested. In order to not affect the sound reading, the observer taking readings is at least 2 m (6.6 ft.) from the equipment being tested, or standing directly behind the operator.
- All machines are tested while stationary and centered on the test surface. With the traction drive in neutral (where applicable) the test is conducted with the machine at maximum engine or motor speed as specified by the manufacturer.
- The operator is located in the normal operating position with the microphone or meter supported independent of the machine, 1,68 m (66 in) above the test surface, 25 cm (10 in) to the right and left centerline of the operators position, and 20 cm (8 in) to the rearmost point of the handle, with the handle in the most forward position.
- The sound level meter is observed for a minimum of 5 seconds or until a stabilized reading is obtained. The maximum repeatable sound level observed during the test at each microphone position is recorded and documented.

Test for Hand-Arm Vibration at the Grip Surface of Hand-Guided Machinery

Amano Pioneer Eclipse measures and rates the vibration at the machine-hand contact surface of hand-guided machines that are provided with handles in accordance with European Machinery Directive (2006/42/EC).

- The test area consists of a flat open floor area that allows the machine to be operated normally.
- The transducer is mounted firmly at a point halfway along the length of the handle where the handle would normally be held.
- Machines are tested while stationary, with all mechanisms necessary for the equipment to perform its intended functions engaged and the traction drive in neutral (if applicable). The machine will be tested at maximum engine or motor speed as specified by the manufacturer of the subject machine.
- The measurements are recorded from the dominant axis.

Machine Preparation

Unpacking the Machine

The machine is shipped boxed on a wooden pallet. To unpack machine:

1. Cut and remove bands holding the box to the pallet.
2. Remove staples attaching the box to the platform at the bottom edge of the box.
3. With two people, one at either end of the box, lift box straight up and off machine.
4. Cut and remove bands securing the machine to the pallet.

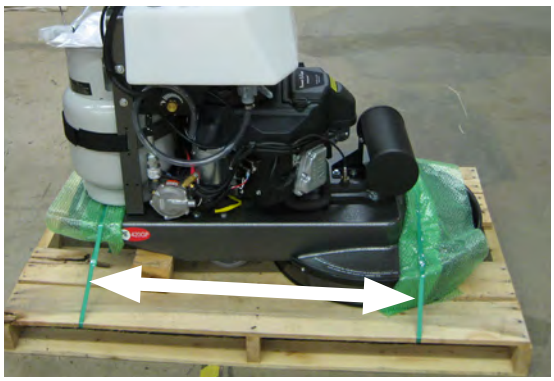

5. Remove back brace.
6. Check machine fluid levels such as the engine oil. (see *Maintenance* section)

   NOTE: If machine was shipped by airfreight, add engine oil.

7. Carefully back the machine off of the pallet.

Filling the LP Cylinder

This machine uses the 20 lb (9.1 kg) capacity cylinder, which meets the D.O.T. 4E240 standards. These cylinders are also listed by UL. In addition, the steel cylinder meets European TPED specifications and is CE compliant. Filling should be done ONLY by a qualified propane dealer. A properly filled cylinder should not exceed 80% of the rated capacity. Do not overfill the cylinder or use a liquid withdraw cylinder on the machine. The use of a liquid withdraw cylinder on a vapor withdraw system could freeze the regulator and create a fire hazard.

Installing the LP Cylinder

Place the cylinder on the cylinder platform at the back of the machine. Connect the fuel hose coupling to the service valve by turning to the right (clockwise). HAND TIGHTEN ONLY! Make sure coupling is not cross threaded and check for leakage by noting any propane odors immediately after cylinder is connected. Finally, secure the tank to the machine using the adjustable strap. Remove slack by pulling on the loose end and securing with the Velcro.

TO REMOVE THE LP CYLINDER, reverse the above procedure. Always connect or change cylinders in a well-ventilated area.

Machine Components

Controls and Instruments

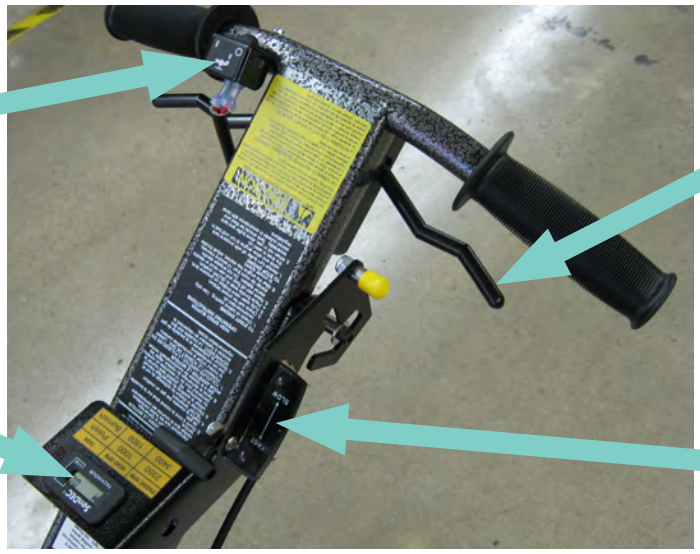

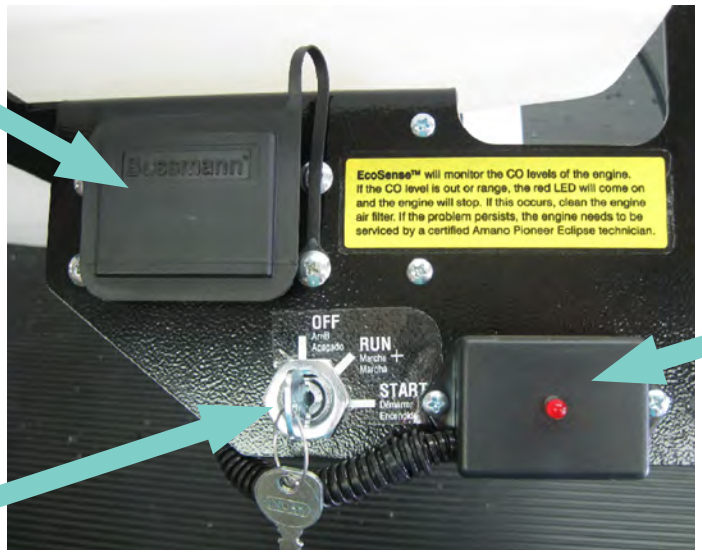

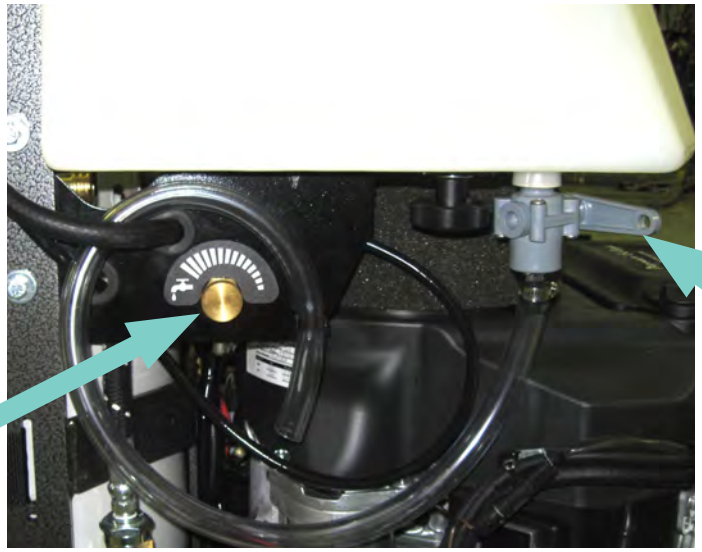

Ignition Switch

This machine features a key switch ignition.

Start: Turn the key all the way clockwise or START to engage the engine starter motor. Once the engine starts release the key.

***NOTE**: Always start this machine with the engine throttle in the idle or "slow" position.*

Run: This is the position of the key while the engine is running.

Off: Turn the key to the "OFF" position to stop the engine from running.

***NOTE**: For safety, always close the propane cylinder valve to stop the engine and then turn the key switch to the "OFF" position.*

Clutch Switch Lever

The clutch switch lever when pulled will engage the electric clutch. On models that have an electric clutch, the pad will not turn until the switch is engaged. Only one lever requires engagement at one time, allowing the user to alternate hands during operation.

Engine Throttle

The machine is equipped with a throttle with three positions. The first position is idle. The second position is for grinding and polishing. The third position is for burnishing. For idle, pull the lever all the way back. For grinding and polishing, push the lever forward until it locks in the first detent position. For burnishing, lift up on the yellow pin and push the throttle all the way forward.

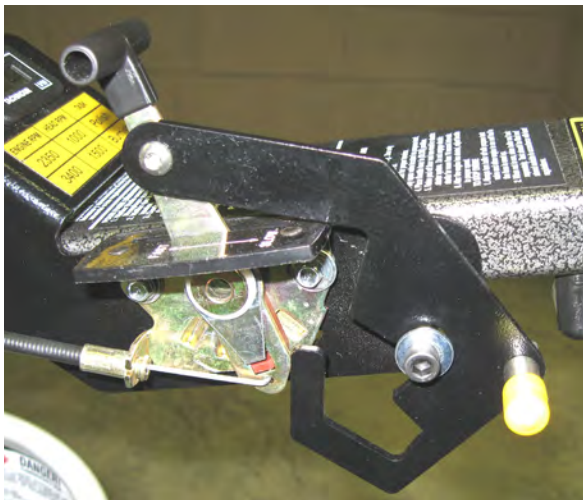

Hour Meter / Tachometer

The hour meter / tachometer records the number of hours the machine has been powered ON. The hour meter reading is used to mark recommended maintenance intervals. It also displays the engine speed. This meter displays hours when the machine is turned OFF and engine speed when the machine is turned ON.

A chart is located below the hour meter/ tachometer. It gives the head speed a task and various engine speeds.

EcoSense Emission Monitoring

EcoSense is an emissions monitoring device that monitors the exhaust emissions and will shut the engine down if the emissions levels are too low or too high.

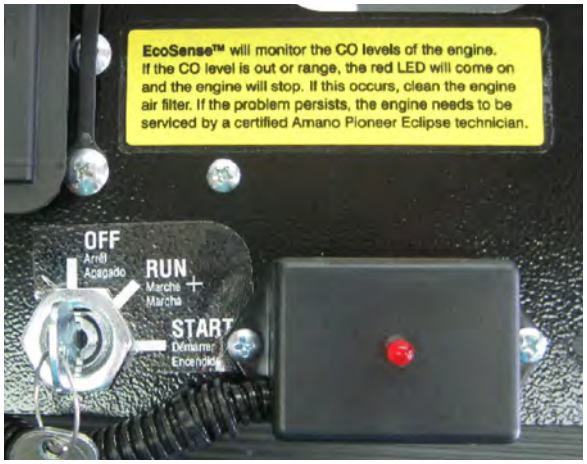

The monitor must receive a signal from the oxygen sensor in order to function. If it did not have a minimum reading requirement it would be possible to disconnect the oxygen sensor and operate the unit, even if the emissions were out of limits. In order for the unit to work as designed it must be able to read both low and high signals, with “not to exceed limits” of both.

The oxygen sensor must reach operating temperature before it will start to send signals to the EcoSense module. This time is set at one minute. A unit may shut down at a cold start up after one minute because the oxygen sensor did not reach required temperature to start to send signals. If this happens, turn the key to the off position several seconds to clear the EcoSense module and restart the engine. Once the engine has started, advance the throttle to full throttle position and start the operation. With the engine at full throttle under load, the signal from the oxygen sensor should be within the normal operating ranges for safe operation. If the engine’s air intake filter needs to be serviced, or an over-filled cylinder has been installed by mistake, or there is a problem with the fuel system that causes the oxygen sensor’s signal to be out of range, EcoSense will shut the unit down in four minutes. The unit can be re-started after clearing the module by turning off the key switch. If corrections have not been made to the unit, EcoSense will continue to shut the unit down after the one minute warm-up and/or four minute out of limit periods.

Engines tend to go to lean burn if allowed to idle for even short periods. Even at high idle speeds most engines will continue to lean downward. It is always best to shut the engine off when it is not being used to do work. Remember the engine is always creating emissions as long as it is running.

The best manner to operate a unit equipped with EcoSense is as follows.

1. With the throttle in the slow position, turn the key switch to the start position, once the engine starts, advance the throttle to full throttle “fast”.
2. When ready to stop operation, release clutch (if equipped) and move throttle to the slow position. If the unit will not be used within one minute, turn the key switch to the off position. If the unit will not be returned to service within a few minutes it is best to turn the gas valve on the tank off first and let the engine consume all fuel that is in lines. Once the engine dies, turn the key switch to off position.
3. When ready to restart, open the gas valve on the tank, put the throttle in slow position and turn key switch to the start position. Once the engine has started, move throttle to full position and return to operation.

SAFR™ technology monitors the pressure between the air filter and the carburetor. As the air filter becomes dirty, this pressure decreases. With **SAFR™** technology, this change in pressure results in a reduction in fuel delivered to the engine. The net result is a Steady Air Fuel Ratio regardless of the air filter condition.

Fuse / Fuse Panel

The machine’s electrical circuit is protected by a fuse, which stops the flow of current in the event of a circuit overload. Once a fuse blows, it must be replaced. If the overload that caused the fuse to fail is still present, the new fuse will fail and the problem must be corrected. **DO NOT** bypass any fuse. To access the fuses in the fuse panel, pull outward on the cover to remove it.

The ignition fuse is located in the wirng harness on the underside of the pump/tank bracket.

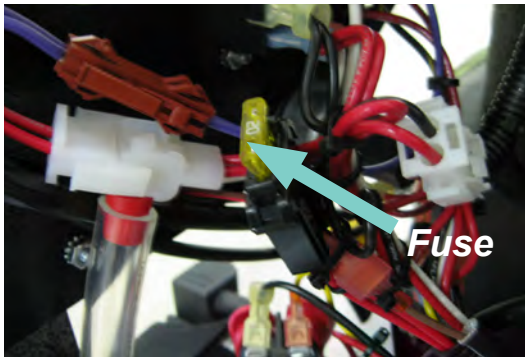

Solution Control Switch

The solution control switch will turn the pump on and off. In order for solution to be delivered to the driver assembly, the engine must be running and the solution control switch must be on. Press the switch toward the "I" and the pump will turn on. Press the switch toward the "O" to turn the pump off.

Start: Press the right side of the switch (I).

Stop: Press the left side of the switch (O).

***NOTE**: Do not operate the pump without solution in the tank. This can damage the pump.*

Solution Control Valve

The solution control valve is used to regulate the amount of solution being applied to the floor. To increase the flow of solution, turn the valve counter-clockwise. To decrease the flow of solution, turn the valve clockwise. The flow of solution can be completely shut off if the valve knob is turned to far clockwise.

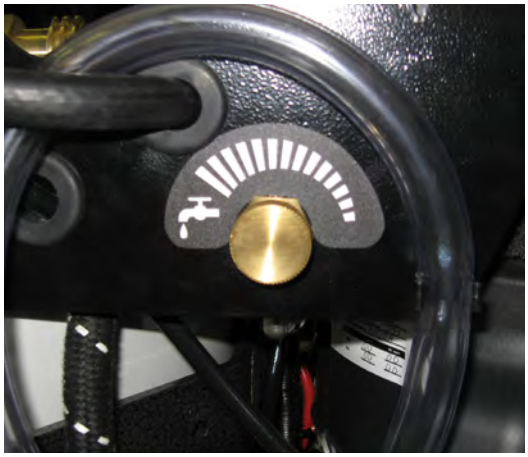

Increase: Turn the valve counter-clockwise.

Decrease: Turn the valve clockwise.

Stop: Turn the valve all the way clockwise.

Solution Tank Drain Valve

Use the solution tank drain valve to remove remaining solution. Remove the drain hose from the clip and place in an appropriate container or drain. Opening the valve, pushing downward, will drain the solution tank. When draining is complete, close the drain valve and reconnect hose using the hose clip.

Handle Adjustment

1. The height of the handle can be adjusted by raising or lowering the handle.
2. Loosen the handle adjustment lever on the side of the handle by turning is counter-clockwise (toward the rear of the machine).

***NOTE**: The handle adjustment lever will ratchet. Pull outward and pivot the lever in the desired direction.*

3. Move the handle to the desired height and tighten the handle adjustment lever.

Rok-Bak

1. Close the valve on the propane cylinder, allow the engine to stop and turn the machine OFF.
2. Remove the propane cylinder.
3. Raise the handle to the full-up position (about a 45° angle).
4. Make sure the lid is tightened securely on the solution tank.
5. Completely close the solution control valve.
6. (HD Models Only) Remove all weights from the weight bracket (*See Weight Plates Section*).
7. Lift up on the front of the deck rocking the machine back until it rests on the handle grips.

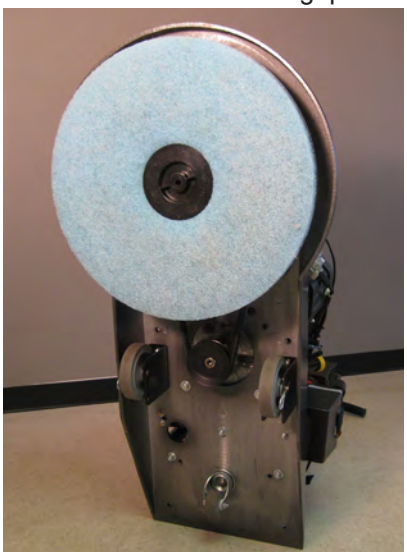

8. When lowering the machine down, do not drop the machine. Slowly lower the machine to the floor until the wheels are on the ground.

Wheel Adjustment

1. Place the machine in the Rok-Bak position. (see *Rok-Bak* section)
2. Locate the wheel brackets on the underside of the underside of the machine.
3. Remove the pin that retains each wheel and relocate to the desired wheel position.
4. Place the wheels in either the “B” (Burnishing - High Speed) or “G” (Grinding - Low Speed) position, depending on what function you are using the machine for.

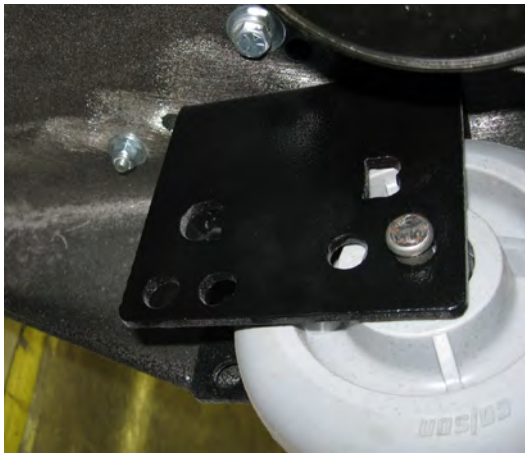

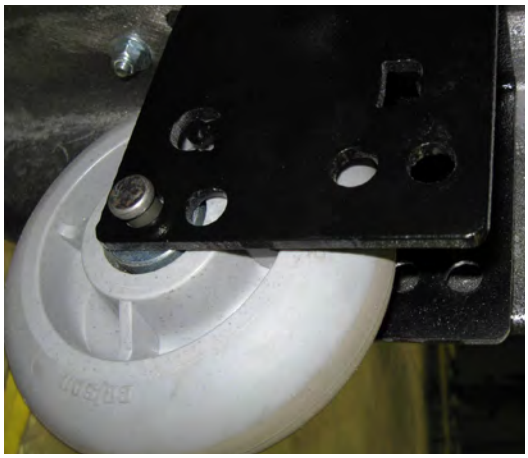

***NOTE**: There are two different settings for each function. To increase pad pressure (more aggressive) move wheels to rear of machine. To decrease pad pressure (less aggressive) move wheels toward the front of machine.*

***CAUTION!** Always place the wheels in the same corresponding location on both wheel brackets. Failure to do so could damage the floor and/or the machine.*

Pad Change

Burnishing and Diamond Impregnated Pads

1. Place the machine in the Rok-Bak position. (see Rok-Bak section)
2. Remove centering device and inspect pad. If pad has worn less than 1/4” (6mm), replace it.

CAUTION! *Carefully inspect the pad holder for cracks or damage. Replace if necessary.*

WARNING! *A damaged pad holder rotating at high speeds may be an extreme hazard if it should come apart.*

3. Make sure wheels are in the burnish position. Refer to Wheel Adjustment.

Level-S Diamond Pads

1. Place the machine in the Rok-Bak position. (see Rok-Bak section)
2. Remove centering device and previously attached pad.

CAUTION! *Carefully inspect the pad holder for cracks or damage. Replace if necessary.*

3. Place Level-S rubber diamond pad face down on the floor.

4. Center and attach the “Diamond Side” face of the Level-S adapter pad to Level-S diamond pad.

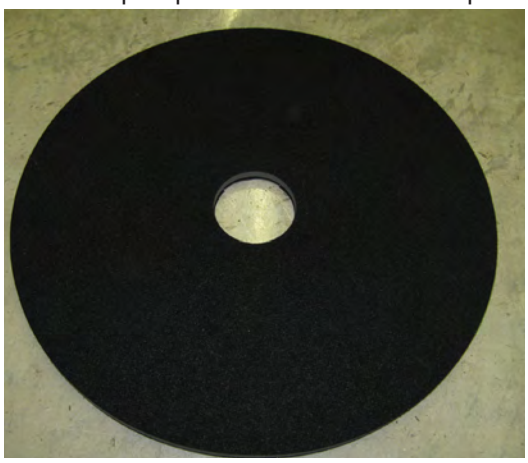

5. Attach Level-S pad adapter with the rubber diamond pad to pad holder.

CAUTION! *Make sure pads are properly centered on pad holder to reduce machine vibration.*

6. Secure with pad retainer.

7. Make sure wheels are in the “grind” position. Refer to Wheel Adjustment.

Head Change (HD Models)

1. Remove all the weight plates from the machine *(see Weight Plates section.)*
2. Place the machine in the Rok-Bak position *(see Rok-Bak section).*
3. Hold the end of the spindle shaft using a 3/4" wrench.

4. Holding the wrench, turn the driver/pad holder counter-clockwise.

NOTE: *Allowing the wrench to rest against the head of a spindle bolt will allow more leverage to be appled to the head.*

5. Slowly thread the driver/pad holder off the spindle shaft.

CAUTION! *Hold the head securely when removing. To prevent bodily harm, floor damage, and/or damage to the head,* **DO NOT** *drop the head.*

6. Be sure all washers and/or spacers are in place on the spindle shaft.
7. Install the new driver/pad holder by threading it onto the spindle shaft, clockwise, until it stops.
8. Adjust the wheels to the correct position, according to the installed driver/pad holder and application (*see Wheel Adjustment section*).
9. Install the appropriate pad or disks *(see Pad Chage or Diamond Removal / Installation section*).
10. Lower the machine to the operating position.

3" Diamonds (HD Models)

1. Remove all of the weight plates from the machine (see *Weight Plates* section).
2. Place the machine in the Rok-Bak position (see *Rok-Bak* section).
3. To remove a diamond disk, there are two different attachments:

- Hook & Loop - Pull each disk off their respective holder.

NOTE: *A flat screwdriver may be required to pry off the diamond disk.*

- Bolted w/ Hook & Loop - Remove the bolt and nut that retains each disk to their respective holder. With the bolt removed, pull each disk off their holder.

NOTE: *A flat screwdriver may be required to pry off the diamond disk.*

4. Check driver and all of the holders for loose hardware, cracks damage, and missing parts.

WARNING! *A driver with loose, missing, or damaged parts may be an extreme hazard. The driver rotates at a high rate of speed.*

CAUTION! *Never use diamonds that are damaged, a set that are not the same grit, or a set that are not the same height, to prevent damage to the surface being polished.*

5. Install diamonds on driver head.

- ***Hook & Loop*** - Center diamond in the holder and press firmly.
- ***Bolted w/ Hook & Loop*** - Orientate the location pins on the diamond with the holes in the holder and press firmly. Install the counter sink head bolt through the center of the disk, thread the hex nut onto the bolt and tighten.

6. Verify all of the diamonds are properly seated and all hardware is properly tightened.
7. Lower the machine back to the operating position.

Weight Plates (HD Model)

1. The down pressure of the head can be adjusted by adding or removing weight plates.
2. This machine can be used with no weights and up to a total of five.

   WARNING! **DO NOT** *place the machine in the Rok-Bak position with weight plates on the weight bracket.*

   CAUTION! *When removing and adding weight plates, take precautions (e.g.: gloves & steel toe shoes) to prevent the pinching and/or crushing of body parts.*

3. To add or remove weight plates to the weight bracket, remove the two pins in the weight bracket tabs.

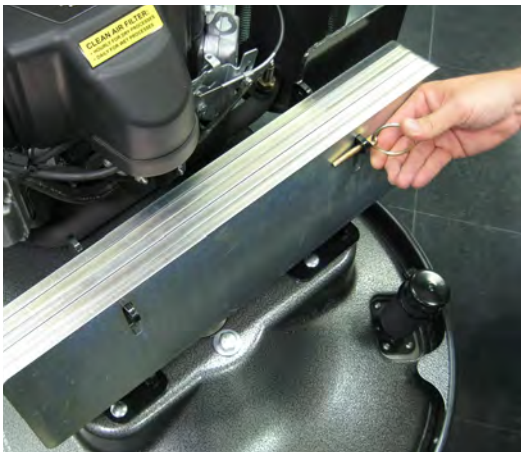

4. Add weights by placing both of the slots over the tabs of the weight bracket. **DO NOT** install the weights upside down.
5. Remove weights by lifting one plate at a time off of the weight bracket.
6. After placing the desired number of plates on the bracket, install the pins and snap the retainer ring over the weight bracket tabs. **DO NOT** run the machine without both pins in place.

Dust Collection (HD Models)

1. The dust collection tube is to allow either a 1-1/2” or 2” diameter vacuum hose (not included) to be attached to the machine and then to an appropriate vacuum (not included).
2. To attach a hose, remove the cap from the end of the dust collection tube.

3. For a 2” diameter vacuum hose, the black hose adapter must be left on the dust collection tube, push the hose down over the tue until it stops. A clamp may be necessary if the hose does not fit tightly.
4. For a 1-1/2” diameter vacuum hose, remove the black hose adapter and push the hose down over the tube until it stops.
5. To prevent the hose from being damaged, secure the vacuum hose using the two adjustable straps. One strap is on top of the water tank and the other is at the bottom of the handle, behind the battery.

Solution Tank

Filling the Solution Tank

1. Push the machine to a level water filling station.
2. Turn the propane cylinder service valve clockwise to close. When the engine has stopped, turn the key switch to the OFF position.
3. Remove the solution tank lid.

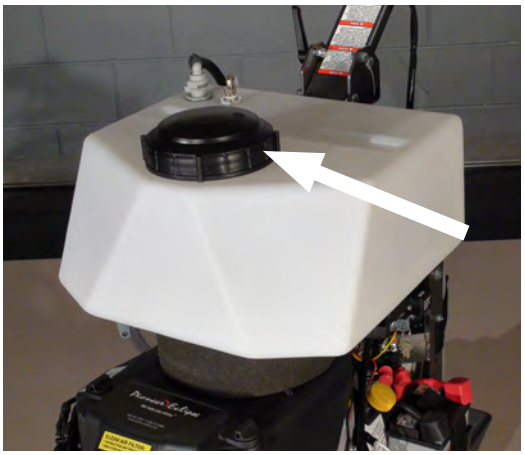

4. Fill the tank with water. Capacity: 6 U.S. gal. (22.7 L)

Emptying the Solution Tank

1. Turn the propane cylinder service valve clockwise to close. When the engine has stopped, turn the key switch to the OFF position.
2. Unclip the open end of the solution tank drain hose.
3. Open the solution tank drain valve.

Removing the Solution Tank

1. Turn the propane cylinder service valve clockwise to close. When the engine has stopped, turn the key switch to the OFF position.
2. Disconnect the return tube by pressing in the collar on the fitting and pulling the tube out. Disconnect the suction hose by releasing the quick-connect coupling.

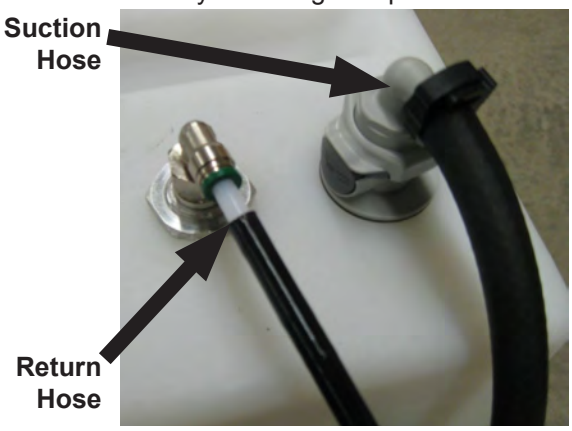

3. Remove two knobs from underneath the solution tank.

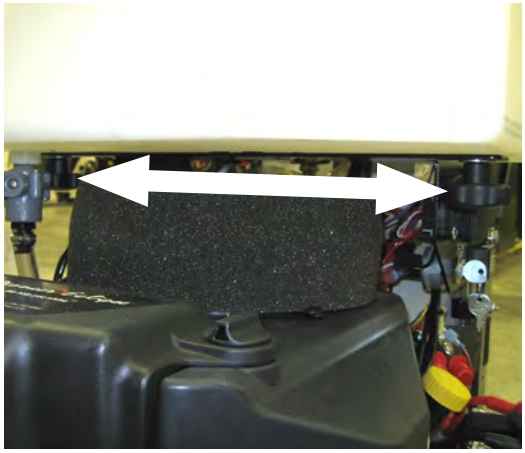

4. Unclip the open end of the solution tank drain hose and remove the solution tank.

How the Machine Works

This machine is a propane burnisher that has a pad driver that is belt driven directly from the engine crank shaft.

Pre-Operation Checklist

- Check the engine oil level. Add oil if needed. (see *Maintenance* section)
- Inspect the engine dust filter and clean off any debris or dust buildup. (see *Maintenance* section)
- Inspect the burnishing pad and replace, if necessary. (see *Maintenance* section)
- Inspect the pad holder/driver for cracks or damage. Replace if necessary. (see *Maintenance* section)

WARNING! *A DAMAGED PAD HOLDER ROTATING AT HIGH SPEEDS MAY BE AN EXTREME HAZARD IF IT SHOULD DISINTEGRATE.*

- Inspect air filter. Clean or replace if necessary. A dirty air filter could lead to elevated levels of carbon monoxide. (see *Maintenance* section)
- Inspect the drive belt. Replace if necessary. (see *Maintenance* section)
- Check the machine for leaks or loose fasteners.

LP Fuel Cylinder

This machine uses the 20 lb (9.1 kg) capacity cylinder, which meets the D.O.T. 4E240 standards. These cylinders are also listed by UL. In addition, the steel cylinder meets European TPED specifications and is CE compliant. Filling should be done ONLY by a qualified propane dealer. A properly filled cylinder should not exceed 80% of the rated capacity. Do not overfill the cylinder or use a liquid withdraw cylinder on the machine. The use of a liquid withdraw cylinder on a vapor withdraw system could freeze the regulator and create a fire hazard.

Only Use a Vapor Cylinder!

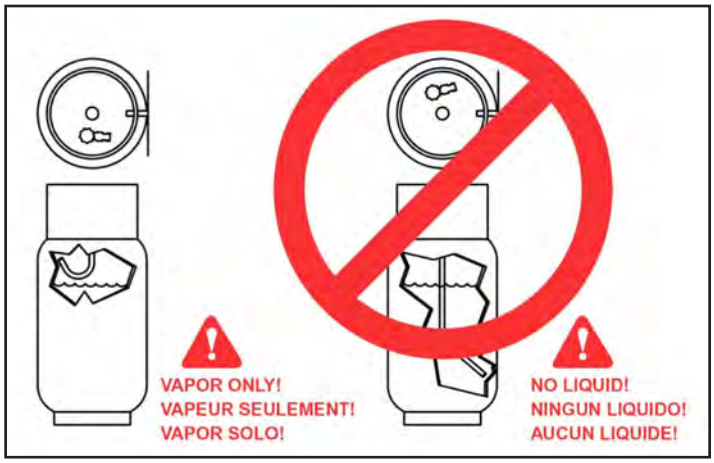

Installing the LP Cylinder

1. Before bringing a propane cylinder indoors, always check it for over-filling.

   CAUTION! *Always connect or change cylinders in a well ventilated area.*

2. Place the tank on the machine and secure with the retaining strap. Remove slack by pulling on the loose end of the strap and secure back to strap.
3. Connect the fuel hose coupling to the service valve by turning clockwise. *"HAND TIGHTEN ONLY."* Make sure coupling is not cross threaded and check for leakage by noting any propane odors immediately after cylinder is connected. (It is sometimes easier to install if the connection to the service valve is made before strapping the cylinder in place.)

CAUTION! *Always open service valve slowly to allow pressure to equalize in hoses. Opening quickly may cause the flow check valve to engage, limiting fuel flow.*

4. To remove the cylinder, reverse procedure.

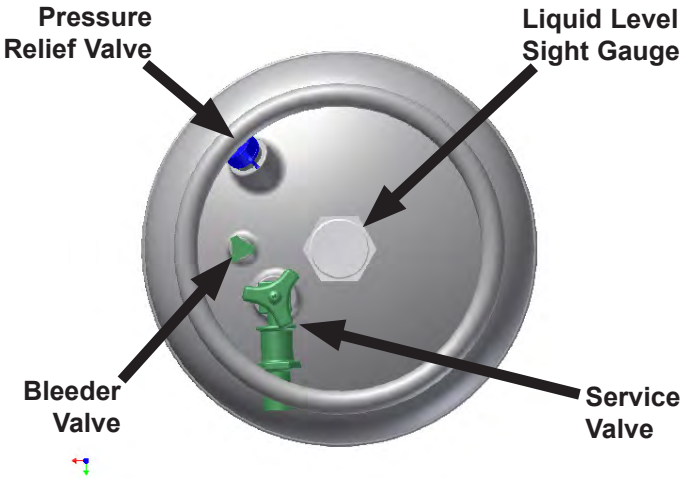

Starting the Machine

1. Check oil and fuel levels.
2. Check and clean engine dust filter.

   CAUTION! *Never run continuously for more than one hour without cleaning or changing engine dust filter.*

3. Check carburetor air filter. Change if necessary. (see *Scheduled Maintenance* section)
4. Turn propane service valve counterclockwise to open.

   CAUTION! *Always open service valve slowly to allow pressure to equalize in hoses. Opening quickly may cause the flow check valve to engage, limiting fuel flow.*

5. Allow machine to tilt backward (pad off floor) and move throttle to SLOW (IDLE) position.
6. With the engine throttle lever in the idle position, engage the starter by turning the key switch to the starting position for approximately 5 seconds. If the engine does not start, release the key switch for 10 seconds, then try to start again in another 5 seconds.
7. After the engine has started, move the throttle forward approximately halfway and allow the engine to warm up for approximately 30 seconds.

   WARNING! *Catalytic mufflers require a few minutes to warm up before effectively removing harmful emissions. Make sure of proper ventilation during this warm-up period!*

Idling and Stopping the Machine

DANGER! *Allowing the engine to idle excessively will increase carbon monoxide emissions! DO NOT leave the machine unattended.*

1. When done operating, make sure the clutch switch is disengaged, the solution control switch is OFF, and the solution control valve is closed.
2. Push the machine to the desired location. Close the LP cylinder service valve. When the fuel is depleted and the engine stops, turn the key switch OFF.
3. Remove the LP cylinder and store properly. Refer to Refueling and Storage of Fuel Cylinders.

To stop the engine, close the service valve on the fuel cylinder by turning it clockwise (the engine will stop when the fuel in the lines is used up). Once the engine stops, turn the ignition switch off.

Burnishing

1. Place the wheels in the burnishing position on the wheel brackets (see *Wheel Adjustment* section).

   CAUTION! *When burnishing DO NOT place weight plates to the to the weight bracket.*

2. After engine has started, allow approximately 30 seconds for the engine to warm up.

3. Advance the throttle to burnishing position.
4. Lower the burnishing head to the floor while moving the machine forward slowly.

   CAUTION! *DO NOT run the burnisher without moving the machine. If the machine is allowed to run in one spot, damage to the floor may occur.*

5. To stop burnishing, push down on handle to raise the burnishing head off the floor.

   CAUTION! *DO NOT add any additional weight to the burnisher head.*

   CAUTION! *DO NOT lift up on the handle to add pressure while burnishing.*

   NOTE*: To not comply with any of the CAUTION! statements could cause the engine to overheat and/or damage the pad holder or drive components.*

   NOTE*: It is recommended to start burnishing on the right side of the aisle, turn and come back down the aisle in the opposite direction, overlapping the previous path slightly. Continue this pattern until the floor area to be burnished has been covered with the last pass being on the right side of the machine. The forward speed is generally at normal walking speed.*

6. When done burnishing, push the machine to the desired location. Turn off the LP cylinder service valve. When the fuel is depleted and the engine stops, turn the key switch OFF.
7. Remove the LP cylinder and store properly. Refer to *Refueling and Storage of Fuel Cylinders.*

Grinding and Polishing

1. Fill the solution tank with water. (refer to *Solution Tank* section).

   WARNING! *DO NOT GRIND OR POLISH DRY WITH THE STANDARD 420GP21 MACHINE. IT IS ONLY INTENDED TO GRIND OR POLISH WET. IF USED FOR A DRY GRIND OR POLISH APPLICATION, EXCESSIVE DUST COULD BE GENERATED THAT COULD BE AN IRRITANT.*

   NOTE: *The 420GP21HD model is equipped with a vacuum port making it suitable for dry grinding.*

2. After engine has started, allow approximately 30 seconds for the engine to warm up.

3. Advance the throttle lever forward until it locks in the first detented position.

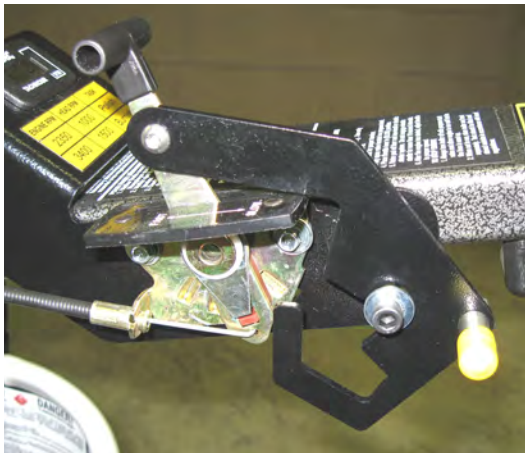

4. Turn on the Solution Control Switch.

5. Open the Solution Control Valve to the desired setting.

6. Activate the Clutch Switch Lever and lower the head to the floor while moving forward slowly.

   CAUTION! *Do not operate the machine without moving it. If the machine is allowed to operate in one spot, damage may occur to the floor.*

   CAUTION! **DO NOT** *add weight to the burnisher head.*

   CAUTION! **DO NOT** *lift up on the handle to add pressure while grinding or polishing. If more pad pressure is required, move the wheels to the rear of the machine. (refer to Wheel Adjustment section).*

   NOTE: *To not comply with any of the CAUTION! statements could cause the engine to overheat, damage the drive components, or damage the floor.*

   NOTE: *It is recommended to start grinding / polishing on the right side of the aisle. Make sure there is plenty of overlap between passes. Make appropriate number of passes until floor has a consistent appearance prior to moving to the next grit diamond. Walking speed is slow at the lower grits and progressively faster with the higher grits.*

Machine Troubleshooting

Problem	Possible Cause	Solution
Engine is hard to start	Propane cylinder is not properly connected.	Check connection and open service valve slowly.
	Battery is weak.	Charge battery or replace.
	Oil level is to low.	Check the oil level and add if needed.
	Insufficient vacuum.	Place the engine throttle in the idle "slow" position.
		Check the regulator vacuum hose for breaks, pinched hose, or a bad connection.
	Coil air gap out of adjustment.	Adjust coil air gap (Check FS481V Service Manual). Contact an APEC Certified Technician.
	Spark plug or head bolts loose.	Retorque (Check FS481V Service Manual). Contact an APEC Certified Technician.
	Head gasket blown or valves need adjusting	Replace head gasket, adjust valves and replace if necessary (Check FS481V Service Manual). Contact an APEC Certified Technician.
Engine will not start	Propane cylinder is empty.	Install properly filled cylinder.
	Oil level is to low.	Check the oil level and add if needed.
	Machine is in the pad change position.	Lower the machine to operating position.
	Main fuse is blown.	Inspect fuse and if blown replace
	Insufficient vacuum.	Place the engine throttle in the idle "slow" position.
		Check the regulator vacuum hose for breaks, pinched hose, or a bad connection.
	Head gasket blown or valves need adjusting.	Replace head gasket, adjust valves and replace if necessary (Check FS481V Service Manual). Contact an APEC Certified Technician.
	Wires broken or disconnected.	Reconnect or replace wires. Contact an APEC Certified Technician.
	Coil(s) defective.	Replace coil(s) (Check FS481V Service Manual). Contact an APEC Certified Technician.
	Spark plug gap is incorrect.	Adjust gap to 0.025" (.64mm)
	Spark plug defective.	Replace spark plug.
	Econsense (Optional) shut the machine down	If the light is on, turn the key switch off and wait 30 seconds. Try again.
		Bad module. Contact an APEC Certified Technician.
Engine lacks power	Insufficient vacuum.	Place the engine throttle in the idle "slow" position.
	Dirty air filter(s).	Clean or replace the engine dust filter.
		Clean or replace the primary filter (paper element).
		Clean or repalce the secondary filter (foam element).
	Governor out of adjustment or malfunctioning.	Adjust governor and replace if necessary (Check FS481V Service Manual). Contact an APEC Certified Technician.
	Head gasket leaking.	Replace head gasket (Check FS481V Service Manual). Contact an APEC Certified Technician.
	No compression.	Worn piston ring(s) and/or cylinder head(s) require replacement (Check FS481V Service Manual). Contact an APEC Certified Technician.
	Fuel mixture is to lean.	Check and adjust fuel mixture if necessary. Contact an APEC Certified Technician.
	Valves need adjusting or replacing.	Adjust valves (Check FS481V Service Manual). Contact an APEC Certified Technician.
Smell or burned rubber	Belt out of adjustment.	Check the automatic tensioner
Machine vibrates	Loose fasteners.	Check the engine, tensioner, spindle, and pad holder fasteners. Tighten any fasteners that may be loose.
	Pad is not centered on the pad holder.	Remove pad and re-center on padholder. Replace the pad with a new pad if necessary.
	Padholder is out of balance.	Remove pad holder from the macine and clean both sides. Check for cracks or tears. Replace if necessary.
Machine is burnishing too aggressively	Wheels are adjusted to far back.	Move both wheels forward in the wheel bracket.
	Improper pads.	Only use recommended burnishing pads.
Machine pulls to one side	Bent wheel bracket.	Replace wheel bracket.
	Wheel is worn or a bad bearing.	Replace wheel.
	Wheels are adjusted to far back.	Move both wheels forward in the wheel bracket.
Engine stops running	Propane cylinder is empty.	Install properly filled cylinder.
	Engine oil level is to low.	Check the oil level and add if needed.
	Dirty air filter.	Clean both filters or replace if necessary.
	Econsense (Optional) shut the machine down.	Clean all filters or replace if necessary.
		Check for any loose wiring or fuel line connections.
		Service machine and check the fuel settings. Contact an APEC Certified Technician.
Clutch (Optional) will not engage	Loose Connection.	Check all of the wiring for a bad connection or broken wire.
	Clutch is bad.	Replace clutch if necessary. Contact an APEC Certified Technician.
Dust collection (Optional) not working properly	Dust collection bag is not collecting dust.	Empty dust bag.
		Check the dust scoop and/or the dust tube to see if there is an obstruction.
	Skirt is not sealing to the floor.	Skirt is bent or damaged. Replace if necessary.
		Adjust the skirt to fit tightly against the seal, but still able to move freely.
		Check wear edge on bottom of the skirt and replace if necessary.

Maintenance

Scheduled Maintenance

Operation	Interval							
	Daily	First 8 Hrs.	Every 50 Hrs.	Every 100 Hrs.	Every 200 Hrs.	Every 300 Hrs.	Every 400 Hrs.	Every 500 Hrs.
Check & add engine oil	●							
Check for loose or lost fasteners	●							
Check for oil leakage	●							
Inspect fuel hose and connections	●							
Clean Engine dust filter	●							
Inspect pad holder	●							
Change Engine Oil		●	●					
Change engine oil filter		●		●				
Check & clean air cleaner paper element				●				
Check & clean air cleaner foam element				●				
Inspect battery and battery connections				●				
Replace air cleaner paper element					●			
Replace air cleaner foam element							●	
Inspect, clean, & re-gap spark plugs, Replace if necessary				●				
Check & adjust valve clearance.* Retorque heads.*						●		
Clean & lap valve seating surface.*						●		
Check engine emissions								●
Clean cooling fins			●					
Inspect drive belt				●				
Inspect burnishing head assembly			●					
Replace drive belt	As Required							
*** Check FS481V Service Manual. Contact Amano Pioneer Eclipse Certified Technician.**								

Oil Level Inspection

1. Push machine to level surface.
2. Turn off LP cylinder and remove it.
3. Clean area around the oil gauge before removing it.
4. Remove the oil gauge and wipe it with a clean cloth.

5. The machine should be in an upright level position. If necessary, place a block under the back of the machine or apply weight to the front of the deck to maintain an upright, level position.
6. Insert the oil gauge into the tube, but do not tighten the oil gauge.
7. Check the oil level. It should be between the “FULL” and “ADD” marks on the oil gauge.

***NOTE**: If the oil level is near or below the "ADD" mark, remove the oil gauge and add enough engine oil to bring oil level to the "FULL" mark. (Use only SH or SJ SAE30 Oil)*

***NOTE**: If the oil level is too high, remove the excess oil by loosening the oil drain valve.*

***CAUTION!** Do not fill above the "FULL" mark. Excess oil will cause a smoking condition and may cause the engine to overheat.*

Oil Change

1. Change the oil after the first 8 hours of operation and every 50 hours thereafter.
2. Start and warm the engine so the oil will drain easily and completely. Push machine to a level surface. Stop the engine.
3. Turn off LP cylinder and remove it.
4. Remove cap on the end of oil drain hose.
5. Place a suitable container under the end of the oil drain hose.

WARNING! *Be careful with hot oil being drained. It may be hot enough to cause severe burns.*

6. Slowly turn the valve counter-clockwise, until the oil starts to drain.

NOTE: *In order for the oil to drain, it may be necessary to loosen the oil fill cap.*

8. When the oil has finished draining, close the drain valve and place cap back on the end of the valve.
9. Remove oil cap and add clean SH or SJ SAE 30 oil. Use 1.6 U.S. qt. (1.5 L) when the filter is not changed and 1.8 U.S. qt. (1.7 L) when filter is changed.
10. Screw in oil gauge. Reconnect the LP cylinder to the fuel hose.
11. Run the engine at low idle for 2 minutes. Check for leaks around the engine.
12. Stop the engine. Check the oil level (see *Oil Level Inspection* section).

Oil Filter Replacement

1. Place a suitable container underneath the oil filter.
2. Using a strap wrench or oil filter wrench, remove the oil filter. Turn the filter counter-clockwise to remove it.
3. Apply a thin coat of new oil or grease to the oil filter seal (A).
4. Install the new filter ***(Part #: KA490657007)*** by turning it clockwise.
5. Turn the filter until the seal contacts the mounting surface (B) of the engine. Then, turn the filter "*BY HAND"* 3/4 turn more.

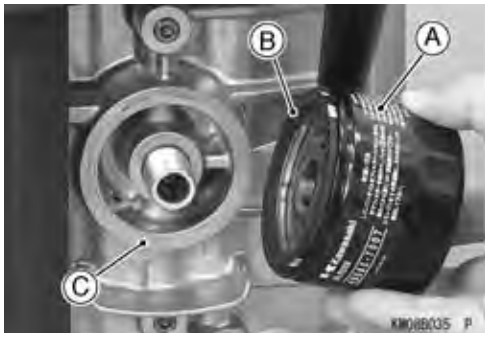

6. Reconnect the LP cylinder to the fuel hose.
7. Run the engine at low idle for 2 minutes. Check for leaks around the engine.
8. Stop the engine. Check the oil level (see *Oil Level Inspection* section).

Spark Plug Inspection and Replacement

1. Turn off LP cylinder and remove it.
2. Pull spark plug cap off of spark plug.
3. Remove spark plug by turning counter-clockwise and inspect it.

   ***NOTE**: If the plug is oily or has carbon build up on it, clean the plug using a high flash-point solvent and a wire brush or other suitable tool.*

   NOTE**: If the spark plug electrodes are corroded or damaged, or if the insulator is cracked, replace the plug.* ***Use Only (Part #: KA920702112) DO NOT use any other spark plug!

4. Measure the gap with a wire-type thickness gauge. The correct gap is .025 in (.635 mm). If the gap is incorrect, carefully bend the side electrode with a suitable tool to obtain the correct gap.

A: Insulator
B: Center Electrode
C: Plug Gap
D: Side Electrode

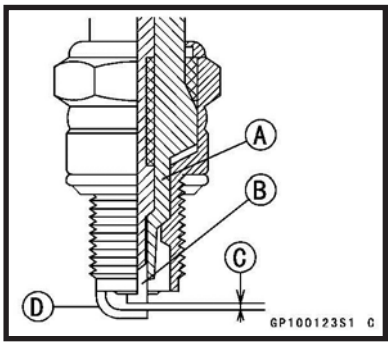

Air Filter Inspection and Replacement

Clean Air Filter:
Hourly for Dry Processes
Daily for Wet Processes

1. Push machine to level surface.
2. Turn off LP cylinder and remove it.
3. Turn the two knobs 1/4 turn counter-clockwise and remove the filter cover.
4. Loosen clamp that retains filter and remove the air filter.

***CAUTION!** Do not wash the air cleaner filters. Do not oil the air filters. Do not use pressurized air to clean the air filters.*

5. Inspect both primary and secondary air filters. If necessary, clean primary filter by lightly tapping and wipe seal ends with a clean cloth. If primary filter cannot be cleaned, is bent, or damaged, it must be replaced. **(Part #: KA110130752)** If secondary filter is dirty, do not attempt to clean it. Replace it with a new filter **(Part #: KA110137046).**
6. Check the intake hose for cracks or damage.
7. Install filters and replace cover.

Engine Dust Filter

1. The engine dust filter should be cleaned each hour and after each use by shaking out the dust and then rinsing with mild detergent. The filter can also be vacuumed with a wet-dry vacuum.
2. Squeeze out the excess water *(Do Not Wring)*.
3. Allow the filter to air dry.

NOTE: *Failure to maintain a clean engine filter will cause the engine to overheat. Also, it may cause the exhaust emissions to elevate to harmful levels. If necessary, replace with* ***(Part #: MP371300)***.

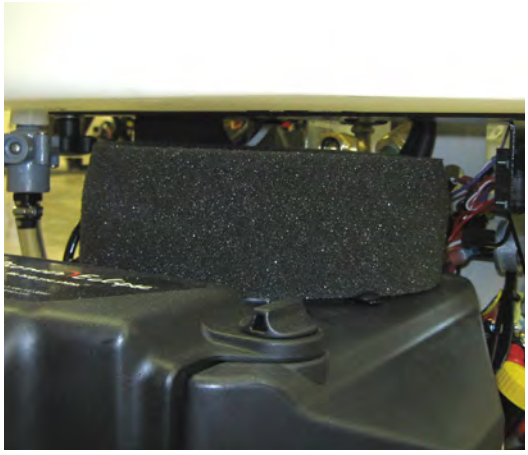

Valve Clearance & Re-torque Heads

Refer to Kawasaki's FS481V service manual.

Valve Seating

Refer to Kawasaki's FS481V service manual.

Head Bolt Maintenance

Refer to Kawasaki's FS481V service manual.

Cooling Fin Maintenance

A. Remove blower housing and any other shrouds.

B. Clean the cooling fins as necessary using compressed air or pressure washer.

C. Reinstall all housings and shrouds.

Inspect Fuel Hose and Connections

1. Push machine to level surface.
2. Turn off LP cylinder and remove it.
3. Inspect hoses for abrasions and other signs of wear. Replace all worn or damaged hoses.
4. Check for gas leaks by spreading a soapy water solution around all connections while the LP cylinder is reconnected and the service valve is turned ON.

5. If a leak is detected, turn off the LP cylinder. If the leak is in a hose, replace it. If the leak is at a fitting, loosen and clean it. Apply pipe-sealing compound and re-tighten it.
6. Recheck for leaks using a soapy water solution. If leaks persist at fittings, replace them and recheck with a soapy water solution once more.

Inspect Pads, Pad Holders, & Drivers

1. Push machine to level surface.
2. Turn off LP cylinder and remove it.
3. Make sure the lid is tightened securely on the solution tank.
4. Completely close the solution control valve.
5. On “HD” models, be sure to remove all of the weights from the weight bracket.
6. Place the machine in the Rok-Bak position. (see *Rok-Bak & Pad Change* section)
7. Remove centering device and inspect the pad. If the burnishing or diamond impregnated pad has worn less than 1/4” (6 mm), replace it. If the Level-S rubber diamond pads have worn to less than 1/16” (1.6mm), replace it.
8. Inspect the Level-S adapter pad. If the pad is torn or has started to delaminate, replace it.
9. Inspect the pad holder or driver for cracks or damage. If the pad holder does not have any damage proceed to step 13.

   WARNING! *A damaged pad holder or driver rotating at a high rate of speed may be an extreme hazard if it should come apart.*

10. If the pad holder needs to be removed, a 3/4” wrench will be required. Locate the wrench flats on top of the spindle shaft. With the spindle shaft secure, turn the pad holder counter clockwise until it is free of the spindle shaft.
11. Save the washer and/or spacer that is on the spindle shaft. Be sure they are in place when the pad holder or driver is re-installed.
12. When threading the pad holder or driver onto the spindle shaft, use the wrench to keep the shaft from turning. Be sure the pad holder or driver is tight before proceeding.
13. Secure the new pad with the centering device.
14. Gently, lower the machine back to the operating position.

Belt Maintenance

1. Push machine to level surface.
2. Turn off LP cylinder and remove it.
3. Make sure the lid is tightened securely on the solution tank.
4. Completely close the solution control valve.
5. On “HD” models, be sure to remove all of the weights from the weight bracket.
6. Place the machine in the Rok-Bak position. (see *Rok-Bak & Pad Change* section)
7. Rotate the pad holder or driver and inspect the belt.
8. If cracks or excessive wear is present, the belt needs to be replaced. (see *Belt Replacment* section)
9. To check for the proper tightness, squeeze the belt together. The belt should depress between 1/4” (0.6 cm) and 1/2” (1.3 cm).

Belt Replacement

Part #: MP8080

1. Follow steps 1 through 11 under the "*Inspect Pads, Pad Holders, & Drivers"* secton.
2. Using a straight screw driver and a 3/8" wrench, remove the screws retaining the shroud liner. Remove the liner.

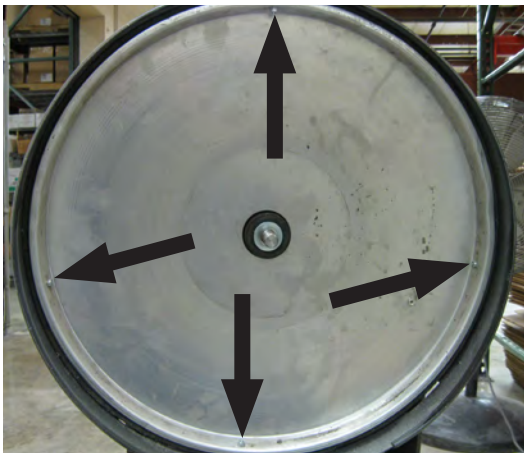

3. Using a 3/8" wrench, remove nut retaining solution fitting in liner.

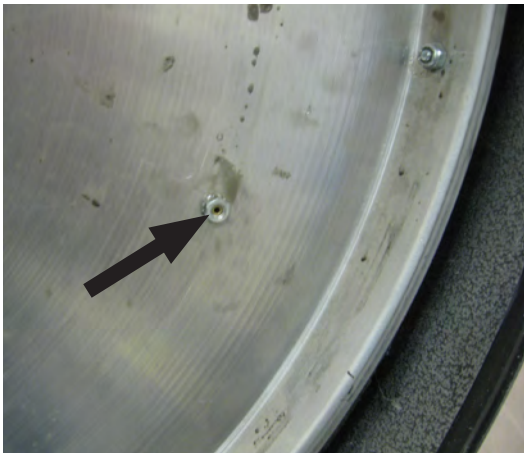

4. Use a large flat screwdriver, between the belt and the spindle pulley, to pry the belt off of the spindle pulley.
5. Use the 3/4" wrench to turn the end of the spindle shaft on top of the machine while removing the old belt from the spindle pulley.

6. Finish removing the belt from the clutch pulley, if necessary.
7. Check clutch pulley for correct alignment with the spindle pulley. Check hardware attaching pulleys for proper tightness.
8. Install the new belt onto the clutch pulley.
9. Reinstall the new belt onto the spindle pulley using the 3/4" wrench to turn the spindle clockwise. Make sure the belt is correctly placed on the idler pulley.
10. Attach the solution fitting to the liner with a 3/8" wrench.
11. Attach the shroud liner with a screw driver and a 3/8" wrench.
12. Reinstall the pad holder onto the spindle shaft.
13. Lower the machine to the operating position.
14. Check belt for correct operation. Check all hardware for proper tightness.

Battery Maintenance

The battery supplied with this machine is a sealed, absorbed glass mat (AGM), maintenance free type. It never needs servicing. When battery replacement is necessary (**Part No: MP362200)**.

1. Push machine to level surface.
2. Turn off LP cylinder and remove it.

3. Disconnect the BLACK negative battery cable first. Disconnect the RED positive battery cable last.
4. Loosen battery-retaining strap.
5. Lift out old battery and replace with new battery.
6. Secure battery with battery-retaining strap.
7. Connect the RED positive battery cable first. Connect the BLACK negative battery cable last.

NOTE: *Dispose of old battery in the proper manner. Most auto parts stores accept used batteries for recycling.*

PROPOSITION 65 WARNING

- Battery posts, terminals, and related accessories contain lead and lead compounds, chemicals known to the State of California to cause cancer and reproductive harm.
- Batteries also contain other chemicals known to the State of California to cause cancer.
- Wash hands after handling.

Machine Storage

Only authorized, trained personnel should have access to propane cylinders and machines.

1. Remove propane fuel cylinder when not in use and store it outside in a storage cage in accordance with NFPA Handbook 58 CAN/CGAB149.2. Do not release or bleed propane inside the building. Please consult your local Fire Marshal to ensure that you are in compliance with local fire codes.
2. Store machine away from objects that may fall and damage it.
3. Never store machine or fuel cylinders near an open flame or heat-producing device.
4. Make sure machine is cleaned properly before storing.
5. Never store machine with cylinders installed, or store spare cylinders in an enclosed van or trailer.
6. Store machine in a dry location, temperature not to exceed 120°F (50°C).

Repacking the Machine

Refer to *Unpacking* and repack the machine using original packing materials and container. Store machine in a dry location, temperature not to exceed 120°F (50°C).

Transporting the Machine

When transporting a propane powered floor machine with the fuel cylinder installed, the cylinder should be securely fastened with the service valve closed and the machine should be secured in the vehicle. Any propane fuel cylinders not installed should be securely fastened to avoid movement and damage. Never store machine with cylinder installed or store spare cylinders in an enclosed van or trailer. It is a good practice to check propane cylinders for overfilling before transporting them. If overfilled, correct before loading them in the vehicle by venting the excess propane outside in a safe area using the bleeder valve.

Machine Specifications

Starting:	12VDC Battery, 275 CCA, AGM Starter Battery
Battery:	MP120800
Deck:	Cast Aluminum
Sound Level:	< 89 dB(A)
Vibration:	Less than 2.5 m/s^2
Engine:	Kawasaki FS481V, 603cc Air Cooled
Engine Speed:	Idle - 1800-2000 rpm High Idle - 3400-3500 rpm
Engine Oil:	SAE 30 w/ API Service SH or SJ
Engine Oil Capacity:	Filter not removed - 1.6qt (1.5L) Filter removed - 1.8qt (1.7L)
Engine Oil Filter:	KA490657007
Engine Air Filter:	KA110130752 (*Paper Element*)
Engine Air Filter:	KA110137046 (*Foam Element*)
Spark Plug:	KA920702112
Spark Plug Gap:	0.025 in. (0.635 mm)
LP Cylinder Type:	MP105900 - 20lb (9.1 kg) Vapor Withdraw
Deck Drive:	Electric Clutch with B-Section Belt
Drive Belt:	MP8080
Fuses:	SS2570 (20A) MP043000 (7.5A)
Solution Tank Capactiy:	6 Gal (22.7 L)

PE420GP21

Pad Size:	21” (53.3 cm)
Pad Speed:	
	1000 RPM *(Grinding & Polishing)*
	1500 RPM *(Burnishing)*
Width:	24.5” (62.2 cm)
Length:	56” (142.4 cm)
Height:	39.5” (100 cm)
Weight:	265 lbs (120 kg) *(w/ cylinder)*

PE420GP21HD

Pad Size:	21” (61.0 cm)
Pad Speed:	
	1000 RPM *(Grinding & Polishing)*
	1500 RPM *(Burnishing)*
Width:	24.5” (62.2 cm)
Length:	56” (142.4 cm)
Height:	39.5” (100 cm)
Weight:	380 lbs (172 kg) *(w/ cylinder)*

PE420GP
Propane Hard Floor Machine
Parts Manual

Notes:

Pioneer Eclipse
An AMANO Company

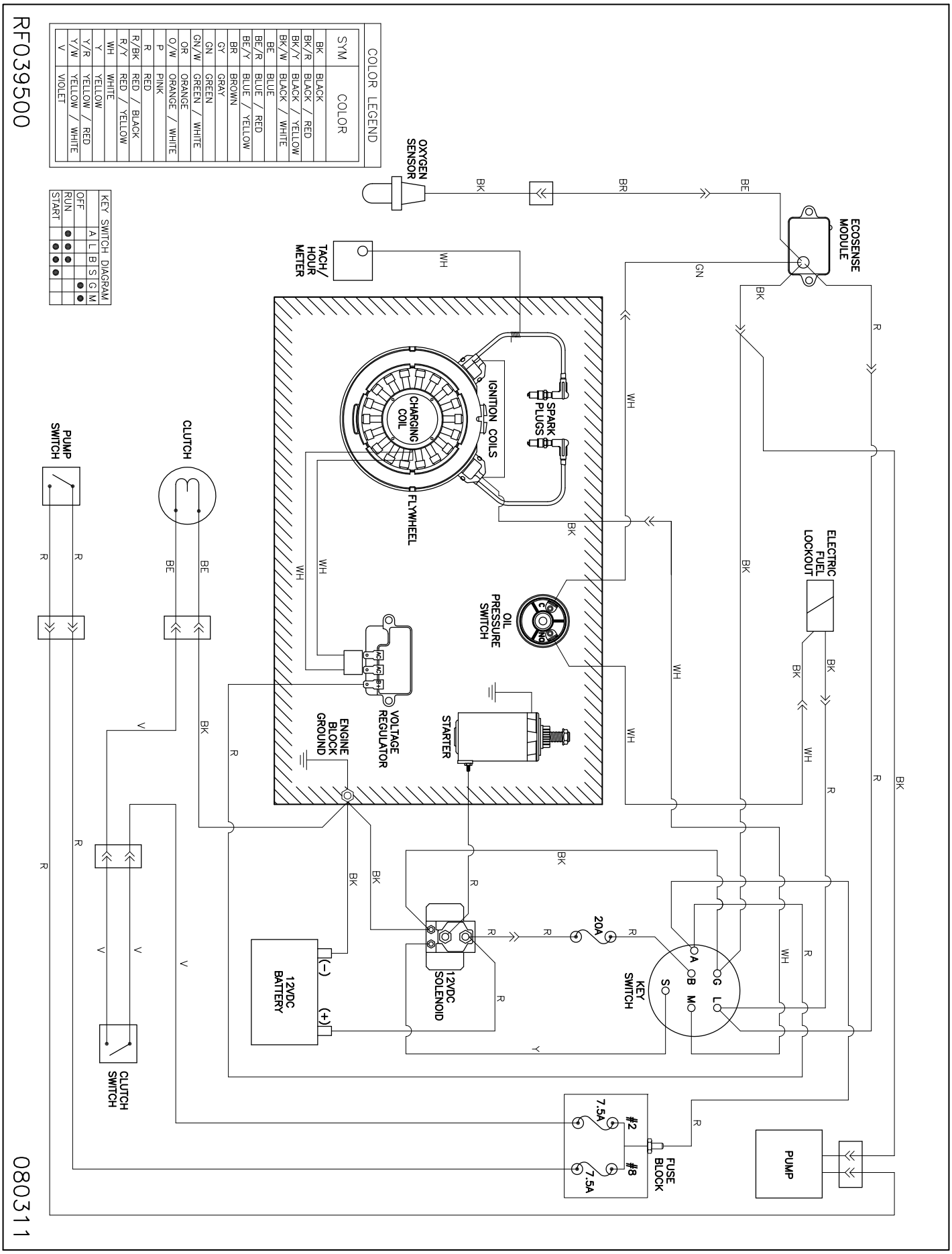
RF039500
COLOR LEGEND
SYM COLOR
BK BLACK
BK/R BLACK / RED
BK/Y BLACK / YELLOW
BK/W BLACK / WHITE
BE BLUE
BE/R BLUE / RED
BE/Y BLUE / YELLOW
BR BROWN
GY GRAY
GN GREEN
GN/W GREEN / WHITE
OR ORANGE
O/W ORANGE / WHITE
P PINK
R RED
R/BK RED / BLACK
R/Y RED / YELLOW
WH WHITE
Y YELLOW
Y/R YELLOW / RED
Y/W YELLOW / WHITE
V VIOLET
KEY SWITCH DIAGRAM
A L B S G M
OFF
RUN
START
OXYGEN SENSOR
ECOSENSE MODULE
TACH/ HOUR METER
IGNITION COILS
CHARGING COIL
SPARK PLUGS
FLYWHEEL
OIL PRESSURE SWITCH
ELECTRIC FUEL LOCKOUT
VOLTAGE REGULATOR
ENGINE BLOCK GROUND
STARTER
PUMP SWITCH
CLUTCH
20A
KEY SWITCH
12VDC SOLENOID
12VDC BATTERY
CLUTCH SWITCH
7.5A
#2
#8
FUSE BLOCK
PUMP
080311

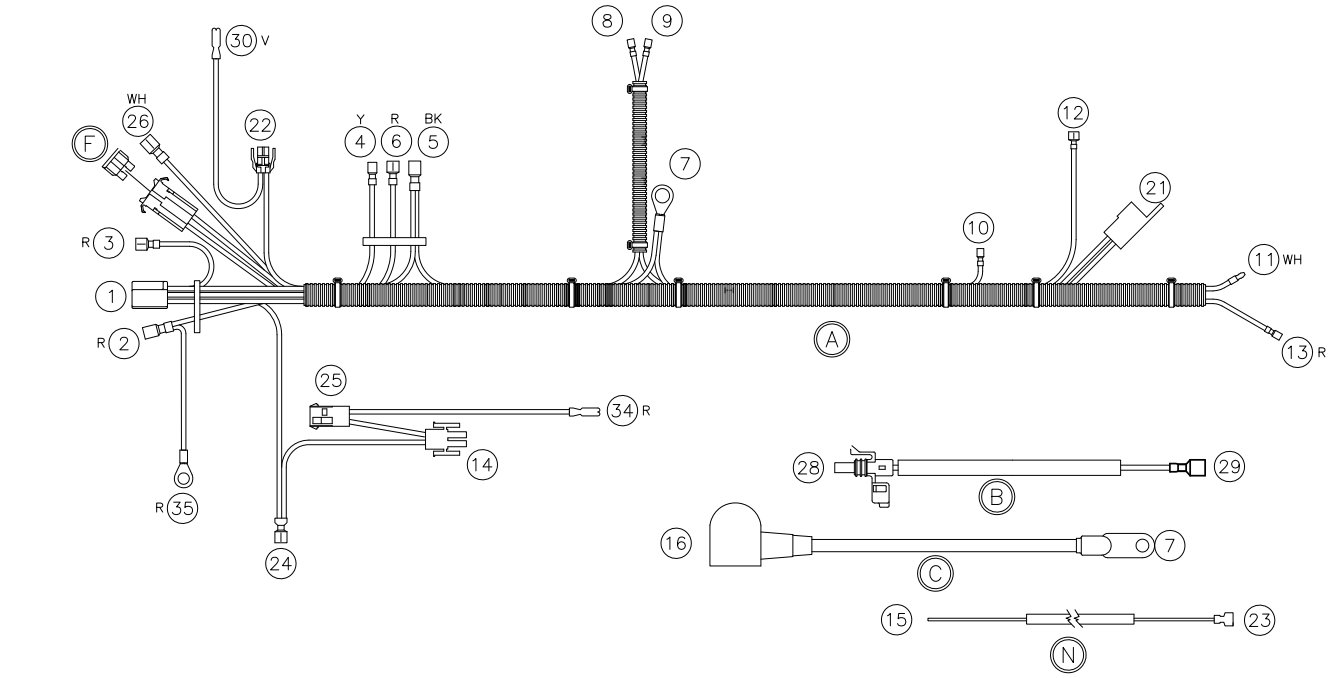

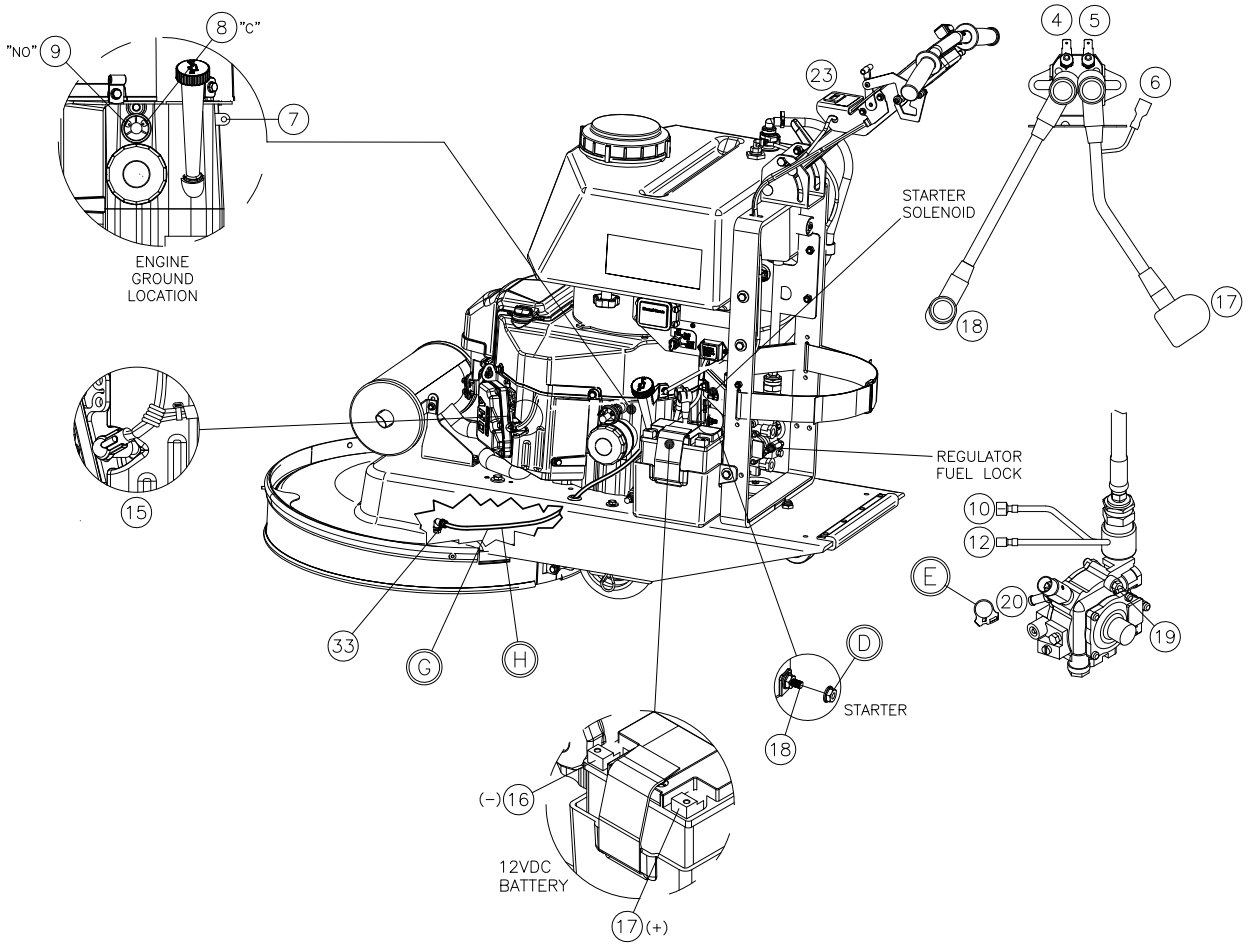

RF039400 080311

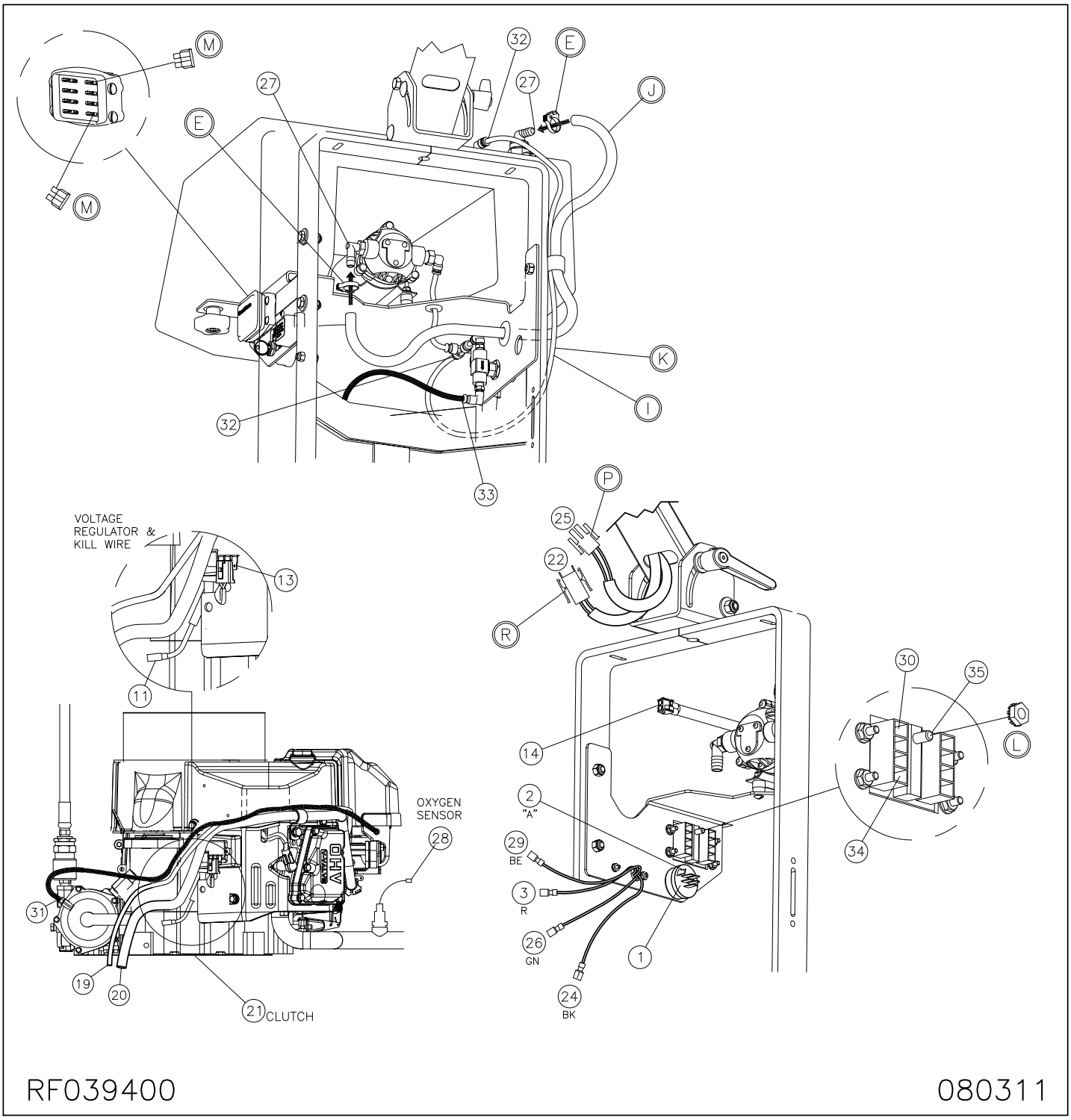

Item	Ref. No.	Description	Qty	Item	Ref. No.	Description	Qty
A	MP403200	HARNESS, WIRING	1	I	MP184200	TUBING, NYLON, 1/4” OD	38”
B	MP373000	WIRE, SENSOR, OXYGEN	1	J	NB2470	HOSE, FUEL, 3/8”	33”
C	MP368500	CABLE, BATTERY, 10	1	K	NB7240	WIRE, SENSOR, OXYGEN	36”
D	NB9545	NUT, FLANGE, 1/4”	1	L	NB9845	TERMINAL ADAPTER	1
E	NB7282	CLAMP, HOSE	3	M	MP043000	FUSE, 7.5A	2
F	SS2570	FUSE, 20A	1	N	MP311500	WIRE, HOUR METER	1
G	MP184200	TUBING, NYLON, 1/4” OD	36”	O	MP382200	HARNESS, WIRING, PUMP	1
H	NB7240	SLEEVING, BLACK	34”	P	MP122100	HARNESS, WIRING, CLUTCH	1

Engine Assembly

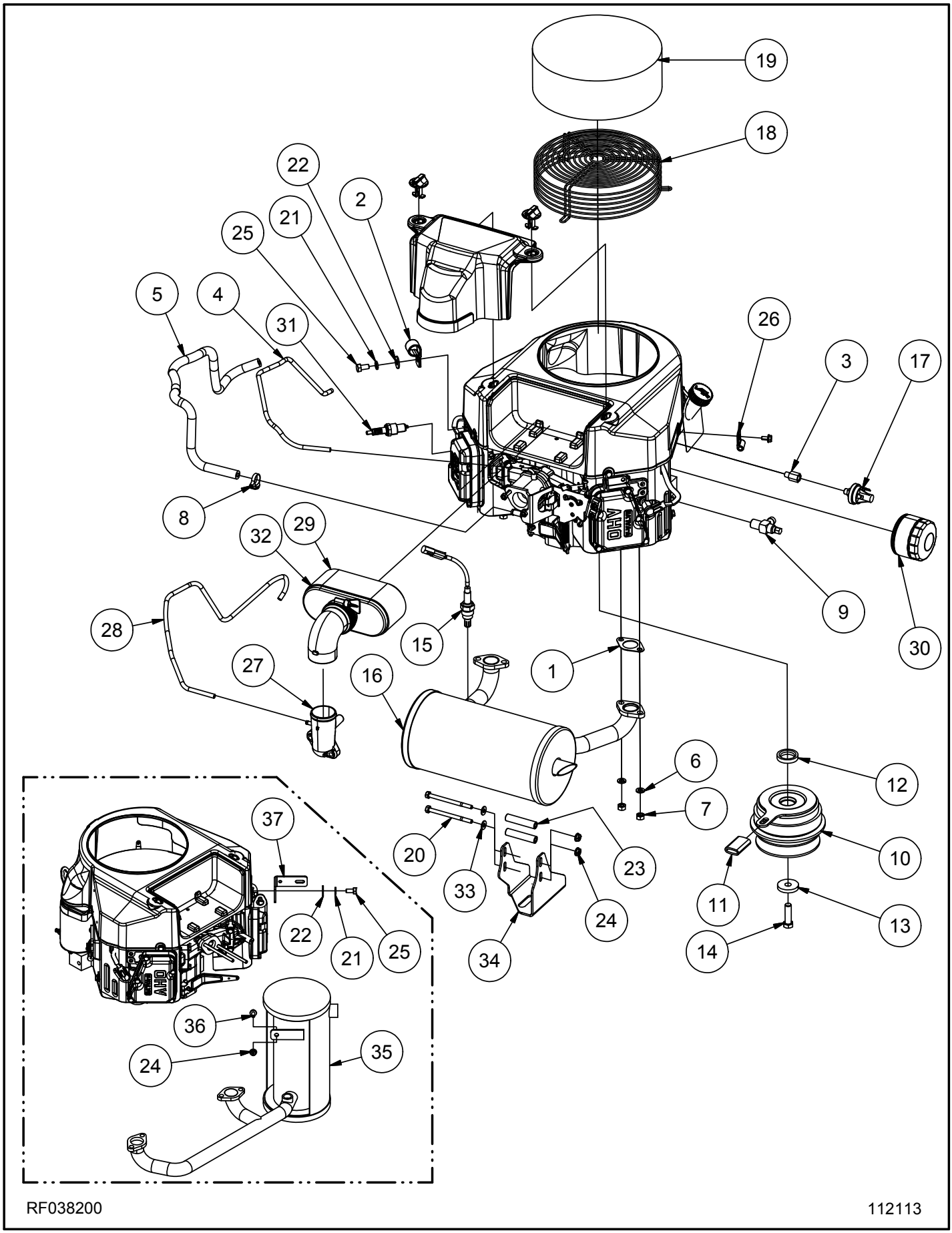

Engine Assembly (continued)

Item	Ref. No.	Description	Qty
1	KA110607016	GASKET, MUFFLER	2
2	NB8130	CLAMP, 3/4” ID	1
3	MP044800	ADAPTER, 1/8” NPT	1
4	NB2460	HOSE, VACUUM, 5/32”	27”
5	NB2470	HOSE, FUEL, 3/8”	26”
6	KA461DA0800	WASHER, LOCK, M8	4
7	KA922107027	NUT, HEX, M8	4
8	NB7282	CLAMP, HOSE	1
9	MP072300	VALVE, DRAIN, OIL	1
10	MP4787	CLUTCH, ASM.	1
11	MP4790	TUBING, NEOPRENE	2.5”
12	MP371700	SPACER, 1.02” ID	1
13	MP4805	SPACER, BOTTOM, CLUTCH	1
14	NB005800	BOLT, HEX, 7/16” X 1-1/2”	1
15	MP466500	SENSOR, OXYGEN	1
16	MP364900	MUFFLER, CATALYST	1
17	MP019200	SWITCH, PRESSURE, OIL	1
18	MP371200	CAGE, INTAKE, ENGINE	1
19	MP371300	FILTER, INTAKE, ENGINE	1
20	NB068500	BOLT, HEX, 1/4” X 3-1/2”	2
21	NB6111	WASHER, LOCK, 5/16”	1
22	NB9267	WASHER, FLAT, 5/16”	1
23	MP455900	SPACER, 1/4” ID	2
24	NB9545	NUT, FLANGE, 1/4”	2
25	NB065000	BOLT, HEX, M8 X 16	1
26	NB8125	CLAMP, 1/4” ID	1
27	MP376300	CARB., ASM.	1
28	NB2460	HOSE, VACUUM, 5/32”	33”
29	KA110137046	PRECLEANER, AIR	1
30	KA490657007	FILTER, OIL	1
31	KA920702112	PLUG, SPARK, NGK, BPR4ES	2
32	KA110130752	ELEMENT, FILTER, AIR	1
33	NB3350	WASHER, FLAT, 1/4”	2
34	MP455601	BRACE, MUFFLER	1
35	MP365300	MUFFLER, CATALYST, VERT.	1
36	NB049300	BOLT, FLANGE, 1/4” X 1/2”	1
37	MP387601	BRACKET, MUFFLER	1

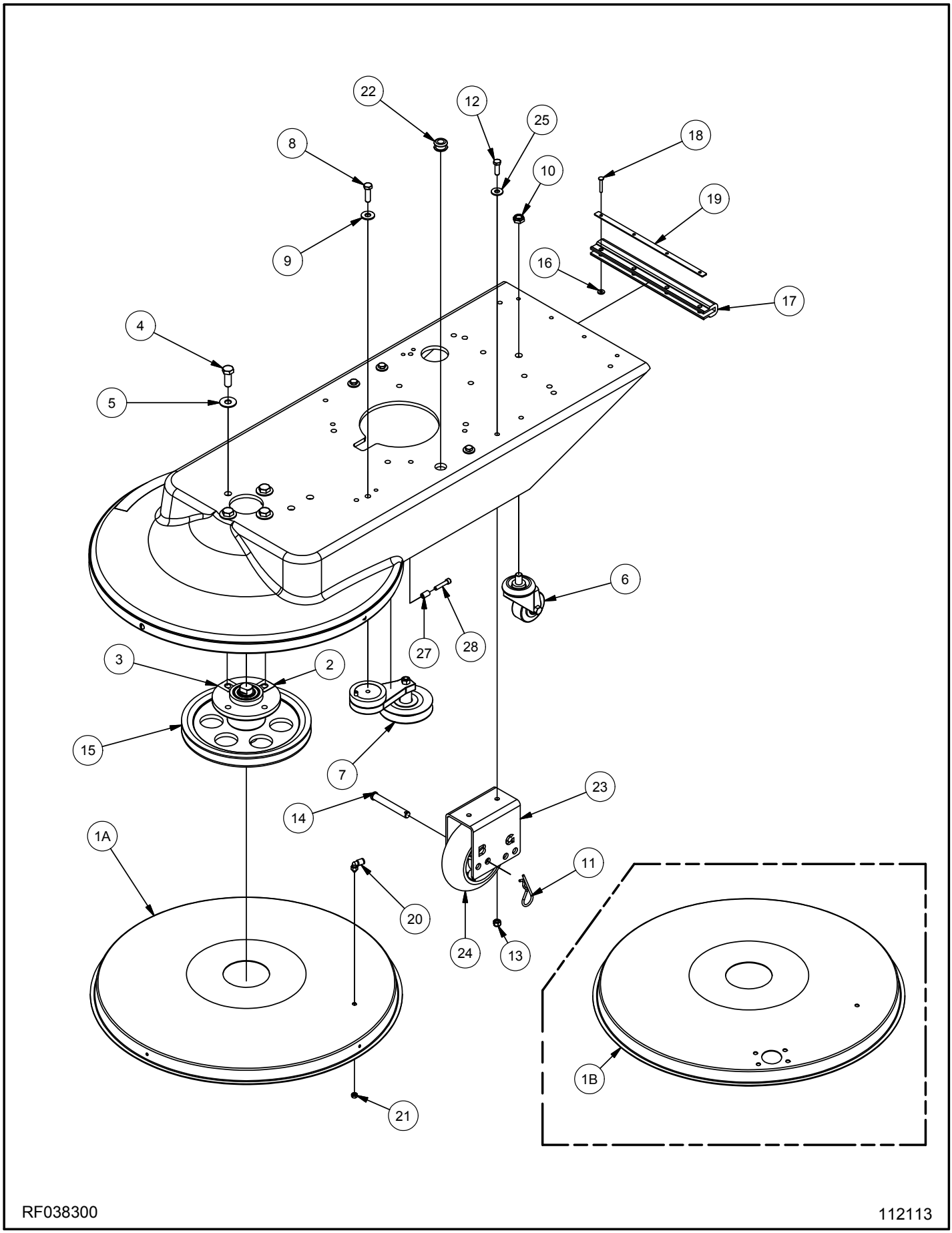
22
12
25
8
18
10
19
9
16
17
4
5
6
27
28
3
2
15
7
23
14
1A
11
20
24
13
1B
21
RF038300
112113

Deck Assembly (continued)

Item	Ref. No.	Description	Qty
1A	SA028700	LINER, REPLACEMENT	1
1B	SA030500	LINER, HD, REPLACEMENT	1
2	MP197100	SHIM, 1/32”	1
3	MP197000	SHIM, 1/16”	1
4	NB6864	BOLT, HEX, 1/2” X 1-1/4”	4
5	NB9269	WASHER, FLAT, 7/16”	4
6	MP012801	CASTER, 2-1/2”	1
7	MP071800	TENSIONER, BELT	1
8	NB6044	BOLT, HEX, 3/8” X 1-1/4”	1
9	NB3450	WASHER, FLAT, 3/8”	1
10	NB003100	NUT, HEX, 1/2”	1
11	LX2105	CLIP, HITCH PIN	2
12	NB6545	BOLT, HEX, 5/16” X 1”	4
13	NB3265	NUT, LOCK, 5/16”	4

Item	Ref. No.	Description	Qty
14	NB053400	PIN, CLEVIS, 1/2” X 3-1/2”	2
15	MP379700	SPINDLE, 9.75”, ASM.	1
16	NB9645	WASHER, FLAT, #10	4
17	MP371400	BUMPER, ROK-BAK	1
18	NB063400	RIVET, 3/16” X 1.00”	4
19	MP336200	STRAP, BUMPER	1
20	MP443300	FITTING, ELBOW, 1/4”	1
21	NB006600	NUT, KEPS, #10	1
22	NB6525	GROMMET, 1/2” ID	1
23	MP389001	BRACKET, WHEEL	2
24	RV009600	WHEEL, 6” X 2”	2
25	NB9267	WASHER, FLAT, 5/16”	4
26	MP139900	BUSHING, SKIRT	1
27	NB038800	BOLT, SH, 1/4” X 1-1/4”	1

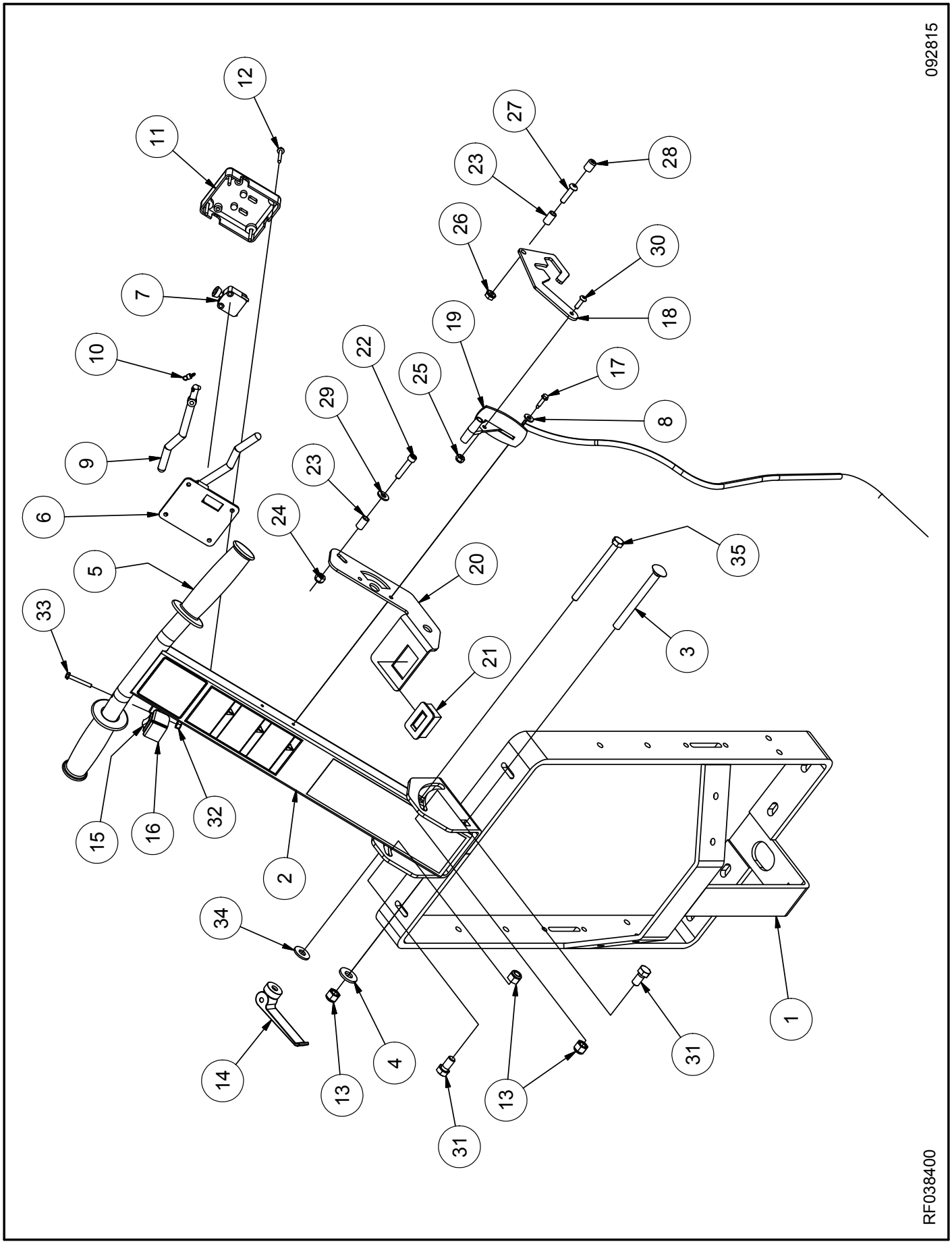
092815
RF038400
1
2
3
4
5
6
7
8
9
10
11
12
13
13
14
15
16
17
18
19
20
21
22
23
23
24
25
26
27
28
29
30
31
31
32
33
34
35

Handle Assembly (continued)

Item	Ref. No.	Description	Qty
1	MP366500	HANDLE, BASE	1
2	MP366800	HANDLE, TOP	1
3	NB9460	BOLT, CARRIAGE, 3/8” X 4”	2
4	NB3450	WASHER, FLAT, 3/8”	2
5	MP366900	GRIP, HANDLE	2
6	MP1230	BASE, BOX, SWITCH	1
7	MP376000	SWITCH, ASM.	1
8	NB9645	WASHER, FLAT, #10	2
9	MP087100	LEVER, SWITCH	2
10	MP9606	SPRING, LEVER	2
11	MP1210	COVER, BOX	1
12	NB5366	SCREW, #8 X 1-1/4”	4
13	NB3267	NUT, LOCK, 3/8”	3
14	MP417900	LEVER, ADJUSTMENT	1
15	MP380000	SWITCH, ROCKER	1
16	MP240500	BRACKET, SWITCH	1
17	NB4381	SCREW, #8 X 3/4”	2
18	MP384001	LEVER, THROTTLE	1
19	MP380500	CABLE, THROTTLE	1
20	MP383901	BRACKET, HOUR METER	1
21	MP280400	METER, HOUR / TACH	1
22	NB038800	SCREW, SH, 1/4” X 1-1/4”	1
23	MP139900	BUSHING, SKIRT	2
24	NB3275	NUT, LOCK, 1/4”	1
25	NB9735	NUT, LOCK, #10	1
26	NB9845	NUT, KEPS, 1/4”	1
27	NB9308	SCREW, BH, 1/4” X 1”	1
28	NB4000	CAP, YELLOW	1
29	NB3350	WASHER, FLAT, 1/4”	1
30	NB049200	SCREW, BH, #10 X 5/8”	1
31	NB6851	BOLT, HEX, 3/8” X 3/4”	2
32	NB9725	NUT, LOCK, #8	1
33	NB063100	SCREW, FLANGE, #8 X 1-1/4”	1
34	NB9267	WASHER, FLAT, 5/16”	1
35	NB066400	BOLT, HEX, M8 X 100	1

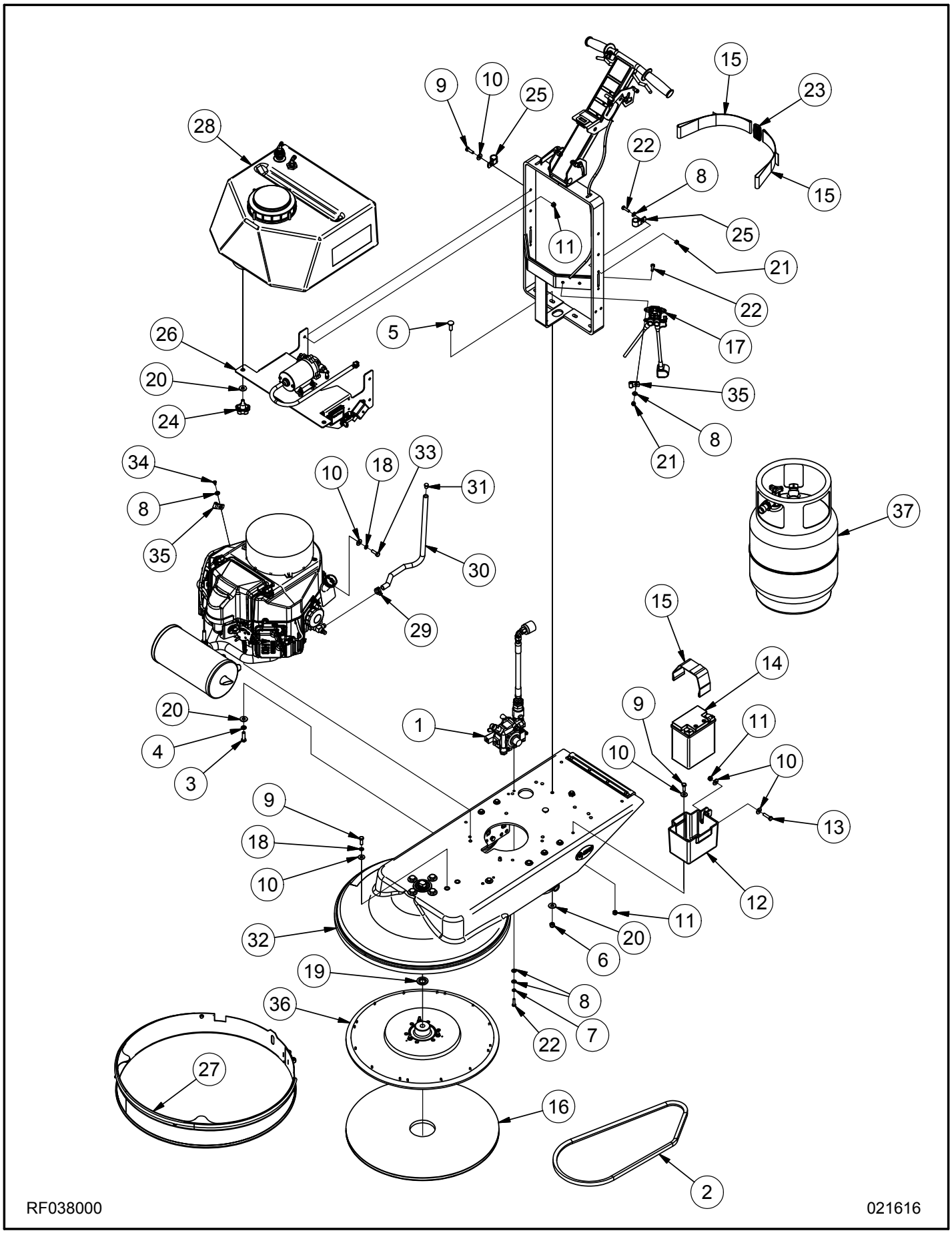
28
9
10
25
15
23
22
8
15
25
11
21
22
26
5
17
20
35
24
8
21
34
10
18
33
31
8
37
35
30
29
15
14
20
1
9
11
4
10
10
3
9
13
18
10
12
11
32
20
6
19
8
36
7
22
27
16
2
RF038000
021616

Main Assembly (continued)

Item	Ref. No.	Description	Qty
1	MP371800	REGULATOR, ASM.	1
2	MP8080	BELT, BX-51	1
3	NB6044	BOLT, HEX, 3/8” X 1-1/4”	3
4	MX1075	WASHER, LOCK, 3/8”	3
5	NB5520	BOLT, CARRIAGE, 3/8” X 1-1/4”	5
6	NB3267	NUT, LOCK, 3/8”	5
7	NB6110	WASHER, LOCK, 1/4”	2
8	NB3350	WASHER, FLAT, 1/4”	8
9	NB6545	BOLT, HEX, 5/16” X 1”	7
10	NB9267	WASHER, FLAT, 5/16”	10
11	NB3265	NUT, LOCK, 5/16”	6
12	MP367500	TRAY, BATTERY	1
13	NB001800	BOLT, HEX, 5/16” X 1-1/4”	1
14	MP362200	BATTERY, 12V	1
15	MP368100	STRAP, 2” X 23”	3
16	MP392600	PAD, ADAPTER	1
17	MP368600	SOLENOID, ASM.	1
18	NB6111	WASHER, LOCK, 5/16”	3
19	MP192300	SPACER, BEARING	1
20	NB3450	WASHER, FLAT, 3/8”	10
21	NB3275	NUT, LOCK, 1/4”	3
22	NB6530	BOLT, HEX, 1/4” X 1”	5
23	MP367600	SLIDE, STRAP, 2”	1
24	MP107200	KNOB, HANDLE, ASM.	2
25	NB8130	CLAMP, 3/4”	2
26	MP380700	BRACKET, PUMP/TANK, ASM.	1
27	MP382600	SKIRT, STEEL, 21”, ASM.	1
28	MP381700	TANK, 6 GAL., ASM.	1
29	NB7282	CLAMP, HOSE	1
30	MP4515	TUBING, DRAIN, OIL	18”
31	NB1621	PLUG, CAP	1
32	MP139600	FELT, BLACK	75”
33	NB065100	BOLT, HEX, M8 X 25	1
34	NB064900	SCREW, TH, #10 X 1/2”	1
35	NB8125	CLAMP, 1/4”	2
36	MP446300	PAD HOLDER, 21”, ASM.	1
37	MP105900	CYLINDER, LP	1

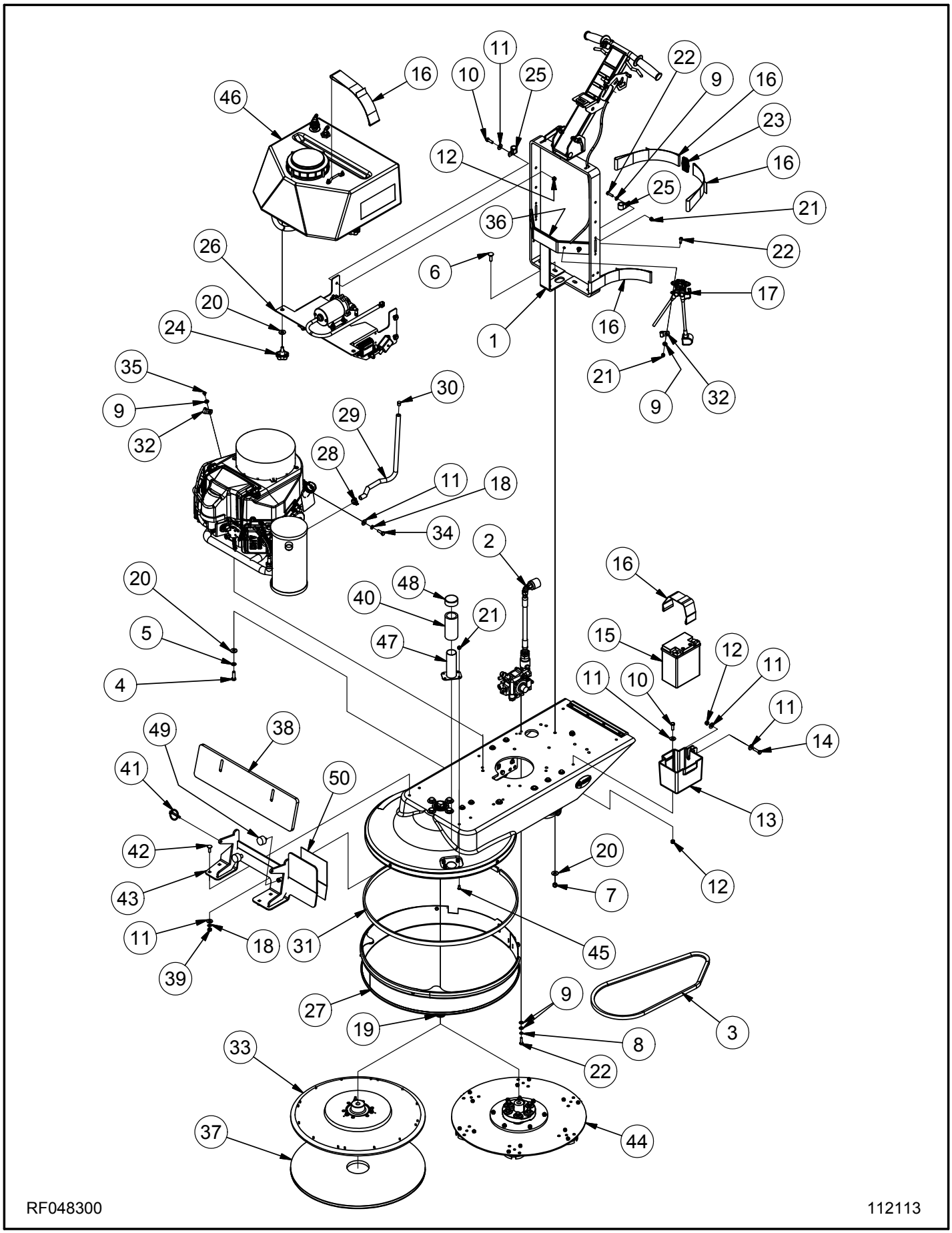
46
16
10
11
25
22
9
16
23
12
16
25
21
36
22
26
6
17
20
24
1
16
21
9
32
35
30
9
29
32
28
11
18
34
2
16
20
48
40
21
5
47
15
12
11
4
11
10
11
14
49
38
41
50
13
42
20
12
43
7
11
18
31
45
39
27
9
19
3
8
33
22
37
44
RF048300
112113

Main Assembly HD (continued)

Item	Ref. No.	Description	Qty
1	MP381200	HANDLE, w/ CLUTCH, ASM.	1
2	MP371800	REGULATOR, ASM.	1
3	MP8080	BELT, BX-51	1
4	NB6044	BOLT, HEX, 3/8” X 1”	3
5	MX1075	WASHER, LOCK, 3/8”	3
6	NB5520	BOLT, CARRIAGE, 3/8” X 1-1/4”	5
7	NB3267	NUT, LOCK, 3/8”	5
8	NB6110	WASHER, LOCK, 1/4”	2
9	NB3350	WASHER, FLAT, 1/4”	8
10	NB6545	BOLT, HEX, 5/16” X 1”	7
11	NB9267	WASHER, FLAT, 5/16”	14
12	NB3265	NUT, LOCK, 5/16”	6
13	MP367500	TRAY, BATTERY	1
14	NB001800	BOLT, HEX, 5/16” X 1-1/4”	1
15	MP362200	BATTERY, 12V	1
16	MP368100	STRAP, 2” X 23”	5
17	MP368600	SOLENOID, ASM.	1
18	NB6111	WASHER, LOCK, 5/16”	5
19	MP195300	SPACER, BEARING	1
20	NB3450	WASHER, FLAT, 3/8”	10
21	NB3275	NUT, LOCK, 1/4”	7
22	NB6530	BOLT, HEX, 1/4” X 1”	5
23	MP367600	SLIDE, STRAP, 2”	1
24	MP107200	KNOB, HANDLE, ASM.	2
25	NB8130	CLAMP, 3/4”	2
26	MP380700	BRACKET, PUMP/TANK, ASM.	1
27	MP382600	SKIRT, 21”, ASM.	1
28	NB7282	CLAMP, HOSE	3
29	MP4515	TUBING, DRAIN, OIL	18”
30	NB1621	PLUG, CAP	1
31	MP139600	FELT, BLACK	75”
32	NB8125	CLAMP, 1/4”	2
33	MP446300	PAD HOLDER, 21”, ASM.	1
34	NB065100	BOLT, HEX, M8 X 25	1
35	NB064900	SCREW, #10 X 1/2”	1
36	MP6600	FELT, VELCRO, BLACK	27”
37	MP392600	PAD, ADAPTER	1
38	MG001000	WEIGHT, FLAT, 17LBS	5
39	NB3260	NUT, HEX, 5/16”	4
40	MG006400	ADAPTER, TUBE, VACUUM	1
41	NB046300	PIN, LYNCH, 1/4” X 1-3/4”	2
42	NB5000	BOLT, CARRIAGE, 5/16” X 1”	4
43	MP462300	BRACKET, WEIGHT, ASM.	1
44	MP463200	DRIVER, DIAMOND, 21”, ASM.	1
45	NB057000	SCREW, BH, 1/4” X 1/2”	4
46	MP462900	TANK, 6 GAL., ASM.	1
47	MP463700	TUBE, DUST, VACUUM	1
48	MP464000	CAP, VINYL	1
49	MP199900	MOUNT, VIBRATION	1
50	MP462800	INSULATION, HEAT	1

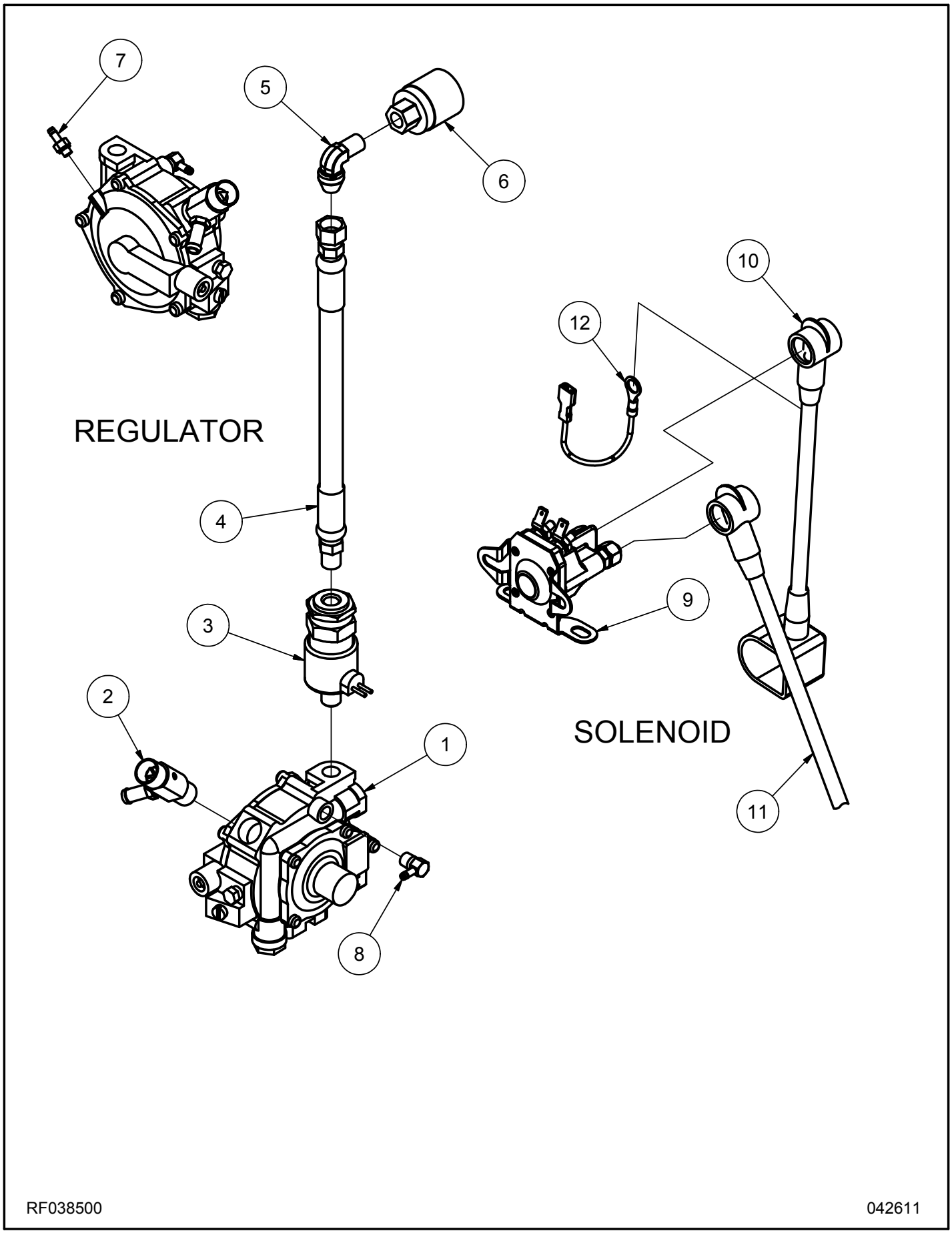
7
5
6
10
12
REGULATOR
4
9
3
2
1
SOLENOID
11
8
RF038500
042611

Regulator and Solenoid Assembly (continued)

Item	Ref. No.	Description	Qty
1	SA026300	REGULATOR, LP	1
2	MP017900	ADJUSTMENT, FUEL, ASM.	1
3	MP317500	FUELOCK, ASM.	1
4	MP367300	HOSE, FUEL, 13”	1
5	MP4330	FITTING, ELBOW	1
6	MP4500	COUPLER, REGO	1
7	MP371100	FITTING, 3/16” HB	1
8	MP372400	FITTING, ELBOW, 1/8”	1
9	MP367100	SOLENOID, STARTER	1
10	MP366700	CABLE, BATTERY, 9”	1
11	MP120900	CABLE, BATTERY, 14”	1
12	MP354900	WIRE, SOLENOID	1

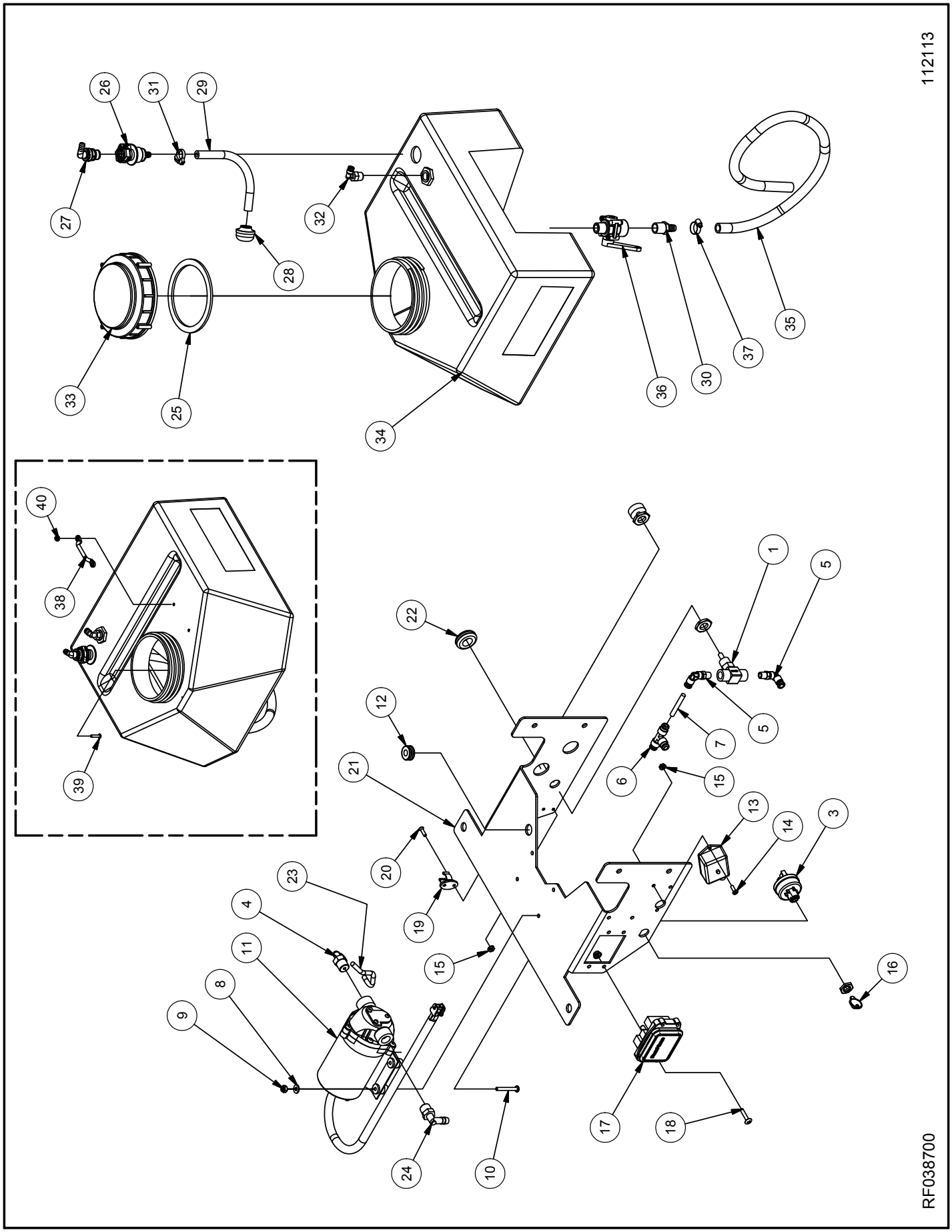
112113
RF038700
1
3
4
5
5
6
7
8
9
10
11
12
13
14
15
15
16
17
18
19
20
21
22
23
24
25
26
27
28
29
30
31
32
33
34
35
36
37
38
39
40

Tank and Controls (continued)

Item	Ref. No.	Description	Qty
1	MP331000	VALVE, NEEDLE, 1/8”NPT	1
2	SS900001	LABEL, SWITCH	1
3	MP199000	SWITCH, IGNITION	1
4	MP325900	FITTING, 1/4” NPT, 90°	1
5	MP171000	FITTING, 1/8” NPT, 90°	2
6	MP171100	FITTING, UNION TEE	1
7	MP184200	TUBING, NYLON, 1/4”	1.5”
8	NB9645	WASHER, FLAT, #10	4
9	NB9735	NUT, LOCK, #10	4
10	NB027500	SCREW, #10 X 1-1/2”	4
11	MP380600	PUMP, 12V, ASM.	1
12	NB009800	GROMMET, 3/8” X 5/8”	1
13	MP402300	MODULE, ECOSENSE, ASM.	1
14	NB007400	SCREW, PH, #8 X 1/2”	2
15	NB9710	NUT, KEPS, #8	4
16	KC4834001	KEY, IGNITION	1
17	MP151800	BLOCK, FUSE	1
18	NB5350	SCREW, TH, #10 X 1”	4
19	MP332100	CLIP, HOSE, 5/8”	1
20	NB9810	SCREW, CS, #8 X 5/8”	2
21	MP379101	BRACKET, TANK/PUMP	1
22	NB009900	GROMMET, 11/16” X 1”	1
23	MP184200	TUBING, NYLON, 1/4”	6”
24	MP331300	FITTING, PE, 3/8” NPT, 90°	1
25	MP152800	GASKET, CAP, SCREW	1
26	MP331900	COUPLING, BODY, 3/8”	1
27	MP332000	COUPLING, INSERT, 3/8”	1
28	MP332400	STRAINER, SUCTION	1
29	NB2470	HOSE, FUEL, 3/8”	9”
30	MP164100	FITTING, PE, 1/2” NPT	1
31	NB7282	CLAMP, HOSE	1
32	MP325900	FITTING, 1/4” NPT, 90°	1
33	MP152700	CAP, SCREW, 6”	1
34	MP378000	TANK, SOLUTION, 6 GAL.	1
35	MP178000	TUBING, VINYL, 1/2” ID	3 FT
36	MP156100	VALVE, BALL, 1/2”	1
37	NB050700	CLAMP, HOSE, 1/2”	1
38	RV009500	LOOP, FOOTMAN	1
39	NB049100	SCREW, BH, #10 X 7/8”	2
40	NB9735	NUT, LOCK, #10	2

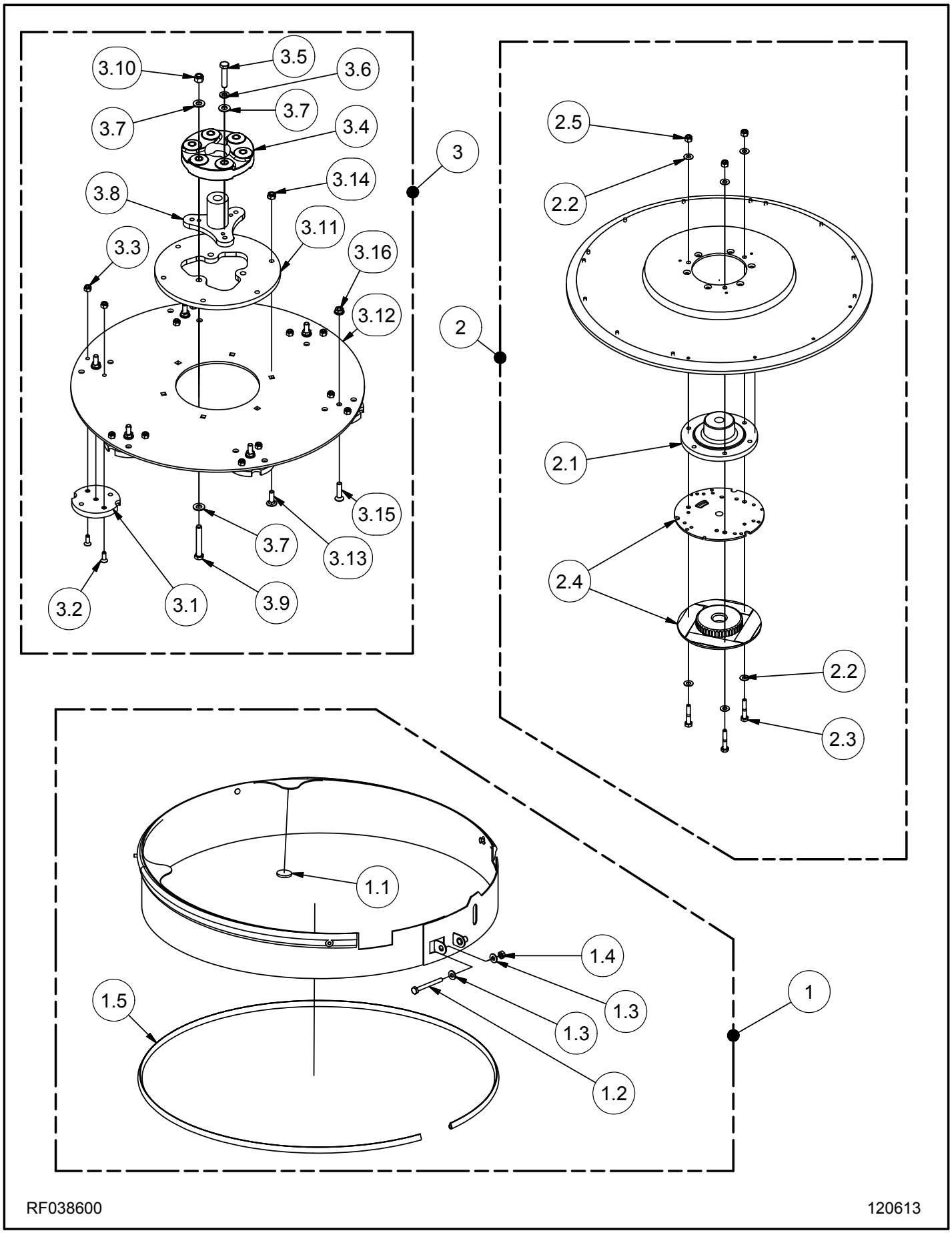
3.10
3.5
3.6
3.7
3.7
3.4
3
3.14
3.8
3.11
3.3
3.16
3.12
2
3.15
3.7
3.13
3.2
3.1
3.9
2.5
2.2
2.1
2.4
2.2
2.3
1.1
1.4
1.5
1.3
1
1.3
1.2
RF038600
120613

SKIRT ASSEMBLY

Item	Ref. No.	Description	Qty
1	MP382600	SKIRT, STEEL, 21”, ASM.	1
1.1	MP140000	DOT, FELT	2
1.2	NB050600	BOLT, HEX, 1/4” X 2-1/2”	1
1.3	NB3350	WASHER, FLAT, 1/4”	2
1.4	MX1045	NUT, HEX, 1/4”	1
1.5	MP139800	EDGING, WEAR	74”

PAD HOLDER ASSEMBLY

Item	Ref. No.	Description	Qty
2	MP446300	PAD HOLDER, 21”, ASM.	1
2.1	MP175900	DISC, FLEXI	1
2.2	NB025400	WASHER, FLAT, 1/4”	6
2.3	NB030500	BOLT, HEX, 1/4” X 1-1/2”	3
2.4	MP383200	RETAINER, PAD	1
2.5	NB3275	NUT, LOCK, 1/4”	3

DRIVER ASSEMBLY

Item	Ref. No.	Description	Qty
3	MP463200	DRIVER, DIAMOND, 21”, ASM.	1
3.1	MP463300	HOLDER, LIPPAGE	6
3.2	NB068200	BOLT, CS, 1/4” X 3/4”	12
3.3	NB3275	NUT, LOCK, 1/4”	12
3.4	MP317700	COUPLING, FLEXI	1
3.5	NB024500	BOLT, HEX, 3/8” X 1-3/4”	3
3.6	MX1075	WASHER, LOCK, 3/8”	3
3.7	MX1080	WASHER, FLAT, 3/8”	9
3.8	MP463500	HUB, DRIVE	1
3.9	NB1588	BOLT, HEX, 3/8” X 2-1/2”	3
3.10	NB3267	NUT, LOCK, 3/8”	3
3.11	MP463101	PLATE, ADAPTER, DRIVER	1
3.12	MP463001	PLATE, DRIVER, 21”	1
3.13	NB5000	BOLT, CARRIAGE, 5/16” X 1”	6
3.14	NB3265	NUT, LOCK, 5/16”	6
3.15	NB069100	BOLT, CS, M8 X 35	6
3.16	NB3105	NUT, FLANGE, M8	6

Pads / Level-S Pads

MP392600	21" Level-S Adapter Pad	PDLP210800	21" Light Polish 800 Grit
PDGPVB210100	21" Vac Brazed 100 Grit	PDLP211800	21" Light Polish 1800 Grit
PDGPSM210050	21" Semi-Metal 50 Grit	PDLP213000	21" Light Polish 3000 Grit
PDGPSM210100	21" Semi-Metal 100 Grit	PDLP21FP	21" Final Polish (Marble & Terrazo)
PDGPSM210200	21" Semi-Metal 200 Grit	PDPPHS2100	21" Power Polish
PDGPSM210400	21" Semi-Metal 400 Grit	PDPPHT2100	21" Power Polish HT
PDGPRE210400	21" Resin 400 Grit		
PDGPRE210800	21" Resin 800 Grit		
PDGPRE211800	21" Resin 1800 Grit		
PDGPRE213000	21" Resin 3000 Grit		

3" Diamond Discs

Part Number	Coating Removal	Initial Grind	Secondary Grind	Medium Polish	Fine Polish	Concrete			Type		Grit	Configuration	Bond
						Soft	Medium	Hard	Wet	Dry			
DP320030		●	●				●	●	●	●	30	Spiral Waffle	Semi-Metal
DP320050		●	●				●	●	●	●	50	Spiral Waffle	Semi-Metal
DP320100		●	●				●	●	●	●	100	Spiral Waffle	Semi-Metal
DP320200		●	●				●	●	●	●	100	Spiral Waffle	Semi-Metal
DP330050		●	●				●	●		●	50	8 - Segment	Resin
DP330100		●	●				●	●		●	100	8 - Segment	Resin
DP330200			●	●			●	●		●	200	8 - Segment	Resin
DP330400			●	●			●	●		●	400	8 - Segment	Resin
DP330800				●	●		●	●		●	800	8 - Segment	Resin
DP331800				●	●		●	●		●	1800	8 - Segment	Resin
DP333500				●	●		●	●		●	3500	8 - Segment	Resin
DP340030		●	●				●	●	●		30	Spiral Waffle	Semi-Metal
DP340050		●	●				●	●	●		50	Spiral Waffle	Semi-Metal
DP340100		●	●				●	●	●		100	Spiral Waffle	Semi-Metal
DP360050		●	●				●	●	●		50	8 - Segment	Resin
DP360100		●	●				●	●	●		100	8 - Segment	Resin
DP360200			●	●			●	●	●		200	8 - Segment	Resin
DP360400			●	●			●	●	●		400	8 - Segment	Resin
DP360800				●	●		●	●	●		800	8 - Segment	Resin
DP361800				●	●		●	●	●		1800	8 - Segment	Resin
DP363500				●	●		●	●	●		3500	8 - Segment	Resin
DP390016	●	●					●	●	●	●	400	5 - Segment	Metal
DP390030	●	●					●	●	●	●	800	10 - Segment	Metal
DP390070	●	●	●				●	●	●	●	1800	10 - Segment	Metal
DP390120	●	●	●				●	●	●	●	3500	10 - Segment	Metal
MPDFUR3000	High Density Foam Riser (Diamond Spacer)									Use with 3" Diamond for extended life			

Small Off-Road Engine Certification Warranty Form

Emission Control Warranty Statement

Your Warranty Rights and Obligations

The California Air Resources Board and Amano Pioneer Eclipse Corporation is pleased to explain the emissions control system's warranty on your 2016 small off-road engine. In California, new equipment that use small off-road engines must be designed, built, and equipped to meet the State's stringent anti-smog standards. Amano Pioneer Eclipse Corporation must warrant the emissions control system on your small off-road engine for the period listed below provided there has been no abuse, neglect or improper maintenance of your equipment. Your emissions control system may include parts such as: carburetor's or fuel injection system, ignition system, catalytic converters, fuel tanks, valves, filters, clamps, connectors, and other associated components. Also, included may be hoses, belts, connectors, sensors, and other emission-related assemblies. Where a warrantable condition exists, Amano Pioneer Eclipse Corporation will repair your small off-road engine at no cost to you including diagnosis, parts and labor.

Manufacturer's Warranty Coverage

This emissions control system is warranted for two years. If any emissions-related part on your equipment is defective, the part will be repaired or replaced by Amano Pioneer Eclipse Corporation.

Owner's Warranty Responsibilities

(a) As the small off-road engine owner, you are responsible for performance of the required maintenance listed in your owner's manual. Amano Pioneer Eclipse Corporation recommends that you retain all receipts covering maintenance on your small off-road engine, but Amano Pioneer Eclipse Corporation cannot deny warranty solely for the lack of receipts or your failure to ensure the performance of all scheduled maintenance.

(b) As the small off-road engine owner, you should however be aware that Amano Pioneer Eclipse Corporation may deny you warranty coverage if your small off-road engine or a part has failed due to abuse, neglect, or improper maintenance or unapproved modifications.

(c) You are responsible for presenting your small off-road engine to an Amano Pioneer Eclipse Corporation distribution center or service center as soon as the problem exists. The warranty repairs should be completed in a reasonable amount of time, not to exceed 30 days. If you have a question regarding your warranty coverage, you should contact Amano Pioneer Eclipse Corporation at 1-800-367-3550.

Defects Warranty Requirements

(A) The warranty period begins on the date the engine or equipment is delivered to an ultimate purchaser.

(B) **General Emissions Warranty Coverage.** Amano Pioneer Eclipse Corporation as the manufacturer of each small off-road engine or equipment must warrant to the ultimate purchaser and each subsequent owner that the engine or equipment is:

(1) Designed, built, and equipped so as to conform with all applicable regulations adopted by the Air Resources Board; and

(2) Free from defects in materials and workmanship that causes the failure of a warranted part for a period of two years.

(C) The warranty on emissions-related parts will be interpreted as follows:

(1) Any warranted part that is not scheduled for replacement as required maintenance in the written instructions required by subsection (D) must be warranted for the warranty period defined in Subsection (B2). If any such part fails during the period of warranty coverage, it must be repaired or replaced by the manufacturer according to Subsection (C4) below. Any such part repaired or replaced under the warranty must be warranted for the remaining warranty period.

(2) Any warranted part that is scheduled only for regular inspection in the written instructions required by subsection (D) must be warranted for the warranty period defined in Subsection (B2). A statement in such written instructions to the effect of "repair or replace as necessary" will not reduce the period of warranty coverage. Any such part repaired or replaced under warranty must be warranted for the remaining warranty period.

(3) Any warranted part that is scheduled for replacement as replacement as required maintenance in the written instructions required by subsection (D) must be warranted for the period of time prior to the first scheduled replacement point for that part. If the part fails prior to the first scheduled replacement, the part must be repaired or replaced by the engine manufacturer according to Subsection (C4) below. Any such part repaired or replaced under warranty must be warranted for the remainder of the period prior to the first scheduled replacement point for the part.

(4) Repair or replacement of any warranted part under the warranty must be performed at no charge to the owner at a warranty station.

(5) Notwithstanding the provisions of Subsection (C4) above, warranty services or Repairs must be provided at all manufacturer distribution centers that are franchised to service the subject engines.

(6) The owner must not be charged for diagnostic labor that leads to the Determination that a warranted part is in fact defective, provided that such diagnostic work is performed at a warranty station.

(7) The manufacturer is liable for damages to other engine components Proximately caused by a failure under warranty of any warranted part.

(8) Throughout the emissions warranty period defined in Subsection (B2), the manufacturer must maintain a supply of warranted parts sufficient to meet the expected demand for such parts.

(9) Any replacement part may be used in the performance of any warranty Maintenance or repairs and must be provided without charge to the owner. Such use will not reduce the warranty obligations of the manufacturer.

(10) Add-on or modified parts that are not exempted by the Air Resources Board may not be used. The use of any non-exempted add-on or modified parts will be grounds for disallowing a warranty claim. The manufacturer will not be liable to warrant failures of warranted parts caused by the use of a non-exempted add-on or modified part.

(11) The manufacturer issuing the warranty shall provide any documents that describe that manufacturer's warrant procedures or policies within five working days of request by the Air Resources Board.

(D) **Emission Warranty Parts List**

(1) Fuel Metering System
- (a) Carburetor, internal parts, and pressure regulator.
- (b) Cold start enrichment system.

(2) Air Induction System
- (a) Intake manifold.
- (b) Air filter.

(3) Ignition System
- (a) Spark Plugs.
- (b) Magneto or electronic ignition system.
- (c) Spark advance/retard system.

(4) Exhaust System
- (a) Exhaust manifold.

(5) Miscellaneous Items Used in Above Systems
- (a) Electronic Fuel Cut-off control.
- (b) Vacuum, temperature, time sensitive valves, and switches.
- (c) Hoses, belts, connectors, and assemblies.

Amano Pioneer Eclipse Corporation will furnish with each new engine written instructions for the maintenance and use of the engine by the owner.

Exception: This warranty does not apply to any machine models that do not have a catalyst muffler.

Limited Warranty

PE420GP

TO QUALIFY FOR THIS WARRANTY

(1) Machine must be registered at the time of purchase on a form provided by Amano Pioneer Eclipse Corporation. Your Amano Pioneer Eclipse Distributor is responsible for the registration of your machine. Please cooperate with your Distributor in supplying necessary information on the card.

(2) The machine must have been purchased from Amano Pioneer Eclipse Corporation or an authorized Amano Pioneer Eclipse Distributor.

(3) This warranty extends to the original purchaser only and is not transferable to subsequent owners.

TIME PERIODS

(1) Propane engine warranted by engine manufacturer for (2) years.

(2) Battery warranted by battery manufacturer for (1) year.

(3) Valve train warranted by Amano Pioneer Eclipse for (1) year.

(4) ONE (1) YEAR WARRANTY - For the PE420GP.
Warranted to be free from defects in material and workmanship for a period of one (1) year from the date of purchase by the original owners. (See Exclusions)

EXCLUSIONS (Not Covered by Warranty)

(1) Parts that fail through normal wear by reason of their characteristics (cords, pads, belts, wheels, pad holder, or other consumable parts).

(2) This warranty does not extend to parts affected by misuse, neglect, abuse or improper maintenance. All defective parts must be returned to the distributor for credit.

THE OBLIGATION OF AMANO PIONEER ECLIPSE CORPORATION

(1) The obligation of Amano Pioneer Eclipse under this warranty is limited to repairing or replacing, at its option, any part which is proven to be defective in material or workmanship under normal use for the applicable period stated above.

(2) Warranty repairs will be made by your Amano Pioneer Eclipse Distributor without charge for parts and labor. They will be compensated with a warranty labor rate of $45.00 per hour, for the first year of ownership.

(3) Parts repaired or replaced under this warranty are warranted only during the balance of the original warranty period. All defective parts replaced under these warranties become the property of Amano Pioneer Eclipse.

WARRANTY SERVICE

To obtain warranty service, take your machine and proof of purchase to any authorized Amano Pioneer Eclipse Distributor. Amano Pioneer Eclipse will not reimburse expenses for service calls or travel. For the Distributor in your area, call Amano Pioneer Eclipse Customer Service Department at 800-367-3550 or 336-372-8080. If you are dissatisfied with the service that you receive, call or write Amano Pioneer Eclipse Customer Service Department for further assistance.

INSTRUCTIONS AND CONDITIONS FOR WARRANTY REIMBURSEMENT

- Order replacement part: Orders will be processed and charged, as normal procedure.
- Call Amano Pioneer Eclipse for R/A number.
- You will need the Engine Serial Number, Machine Serial Number, and the Machine Model Number.
- Parts must be returned, accompanied with the R/A number to be eligible for warranty credit.
- All Warranty Parts will be shipped prepaid UPS Ground, any other method will be at the recipients expense.
- Freight on any Warranty Part after 30 days must be paid for by the Purchaser.
- Warranty labor rate is $45.00 per hour.
- Credit will be issued upon completion of the above steps, at the above rates.

DISCLAIMER OF CONSEQUENTIAL

AMANO PIONEER ECLIPSE DISCLAIMS ANY RESPONSIBILITY FOR LOSS OF USER TIME OF THE AMANO PIONEER ECLIPSE MACHINE OR ANY OTHER INCIDENTAL OR CONSEQUENTIAL DAMAGE EXCEPT AS STATED IN THE WARRANTY APPLICABLE TO EACH MACHINE. EXCEPT AS STATED IN SUCH WARRANTIES, THE COMPANY DOES NOT OTHERWISE WARRANT ANY MACHINE AND NO WARRANTY, EXPRESS, IMPLIED OR STATUTORY IS MADE BY THE COMPANY.

Copyright 2016 Amano Pioneer Eclipse Corporation

SAFETY AWARENESS FORM FOR PROPANE MACHINES

The following must be completed before an employee may use a propane machine!

I have read the "Operators Manual" and understand it.

Name: Date:

(Print or Type)

Demonstrate to your instructor that you can do the following properly and safely:

How to prepare the propane machine for operation:

A. Install pads..... ❑

B. Check oil..... ❑

C. Adjust handle..... ❑

D. Check fuel cylinder for overfilling..... ❑

E. Install fuel cylinder..... ❑

F. Do you have a MSDS for propane?..... ❑

How to operate a propane machine:

A. Start and stop the engine..... ❑

B. Emergency stop..... ❑

C. Clean air filter..... ❑

Cautions:

A. Allow only qualified, trained personnel to operate the machine.

B. Use only D.O.T. approved fuel cylinders supplied by Amano Pioneer Eclipse.

C. Always store fuel cylinders outside in a proper enclosure.

D. Never vent a fuel cylinder inside.

E. Always wear a CO detector badge.

F. Never leave the machine running unattended.

G. Know what to do and whom to call in case of emergency.

When all items are checked off and this form is signed by an instructor or supervisor, you may operate a propane machine.

Employee Signature: _____ Date: _____

Instructor/Supervisor Signature: _____ Date: _____

Manufacturer PDF Provided by southeasternequipment.net

Amano Pioneer Eclipse Corporation

1 Eclipse Rd ● PO Box 909
Sparta, North Carolina 28675 ● USA
www.pioneereclipse.com

+1-336-372-8080
1-800-367-3550
Fax +1-336-372-2913

EC Machinery Directive 2006/42/EC,
EC Restriction of Hazardous Substances Directive (2011/65/EU)
Harmonized Standards Applied: EN 12100-1, EN12100-2

© 2016 Amano Pioneer Eclipse Corporation

LT058900
420GP_H