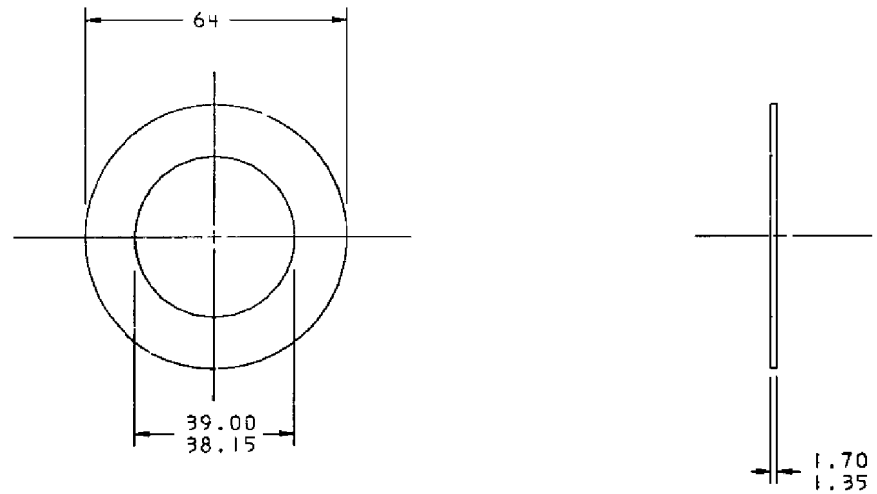

FINISH:
MS 201 CLASS 8A

OTHER RELEASE NO.	ENG. CONTROL RELEASE NO.	REV. LTR	CHANGES	BY	DATE	CHK.
	D6188 143	A	RELEASED TO PRODUCTION BURL.	GH	21APR88	

METRIC TOLERANCES UNLESS OTHERWISE SPECIFIED

WHOLE NUMBERS	±1.5	TWO PLACE DECIMALS	±0.25
ONE PLACE DECIMALS	±0.8	ANGULAR DIMENSIONS	±2°

THIRD ANGLE PROJECTION

THIS PRINT AND THE INFORMATION CONTAINED HEREON IS A CONFIDENTIAL DISCLOSURE. THE SUBJECT MATTER OF WHICH IS THE PROPERTY OF THE J I CASE CO. AND ITS SUBSIDIARY NAMED HEREON.

METRIC

UNLESS OTHERWISE SPECIFIED:
DIMENSIONS ARE IN MILLIMETRES
SURFACE ROUGHNESS IN MICROMETRES Ra

GEOMETRIC DRAWING SYMBOLS
USAGE OF SYMBOLS AND MODIFIERS SHALL CONFORM TO CASE DRAWING STANDARDS-45

FLATNESS	PERPENDICULARITY
STRAIGHTNESS	PROFILE-SURFACE
ROUNDNESS	PROFILE-LINE
CYLINDRICITY	BASIC DIMENSION
ANGULARITY	POSITION
PARALLELISM	CONCENTRICITY
RUNOUT	TOTAL RUNOUT

LEAST MATERIAL CONDITION (LMC)
MAXIMUM MATERIAL CONDITION (MMC)
REGARDLESS OF FEATURE SIZE (RFS)
PROJECTED TOLERANCE ZONE

J I Case
A Tenneco Company
Racine, Wisconsin 53404

FSCM 10988

INTERNATIONAL OPERATION	CVN	SIZE	ENGRG. CONTROL
	CAD	A3	BU

APPROXIMATE MASS Kg
CACS NO. 20447-012
PART NOUN - DESCRIPTION - U.S.
WASHER-
PART NOUN - DESCRIPTION - INT'L.

MATERIAL: C-1018
MATERIAL APPROVAL DATE
DRAWN BY HEK DATE 20APR88
CHECKED BY DATE
SCALE 1:1
APPROVED BY RM DATE
REFERENCE NO. A163363
SHT OF
PART NO. D143324
CODE

Form No. F-2682

MODEL:

0536.XD.143324 DRAWING DWG 4-21-88 6:11:04