Miscellaneous National and International Standard Parts Without a CNH Standard

1. PURPOSE

This standard documents parts, used by CNH, that conform to National and International standards and other company standards including Fiat.

2. SCOPE

This standard includes only those standards that have not been included in CNH standard parts documents.

3. DEFINITIONS

DIN German standards organization
IFI Industrial Fasteners Institute
ISO International Organization Standardization
SAE Society of Automotive Engineers

4. RELATED DOCUMENTS

Case standard XM-001 and XM-002.

5. REFERENCE DOCUMENTS

STPA020—Fastener Finishes and Material Specifications.

6. PROCEDURE

6.1 Parts are displayed in alpha-numeric order by standard. Note: a single space is inserted between the standard organization and the number.

Example:

DIN 988
DIN 7513
Fiat 91337/45
ISO 8746
ISO 8750

6.2 Engineering Standards will provide standards or information on parts included in this document as requested by CNH standard parts users and suppliers.

6.3 TRAPEZOIDAL CROSS-SECTION SEAL (TCS)
All fittings listed in the column “Trapezoidal Seal Fitting Part No.” of this standard must be supplied with Trapezoidal Cross-section Seal (TCS) and must meet the requirements listed in CNH STPL020 (87692742), specifically section 7.3.2 ALTERNATE O-RINGS.
In the description of these parts, TCS will be included to differentiate from standard O-Ring fittings.

THE INFORMATION HEREON IS THE CONFIDENTIAL AND PROPRIETARY PROPERTY OF CNH INDUSTRIAL N.V. AND/OR ITS SUBSIDIARIES OR DIVISIONS. ANY USE, EXCEPT THAT FOR WHICH IT MAY BE LOANED, IS PROHIBITED.

UNCONTROLLED COPY When Printed

Contents - National and International Standards

Number	Standard description
ANSI B1.5	ACME Threaded Nuts
DIN 125	Plain Washers
DIN 316	Wing Screws
DIN 557	Metric Square Nut
DIN 608	FLAT COUNTERSUNK HEAD SQUARE NECK BOLTS WITH SHORT SQUARE
DIN 609	Fit Bolts
DIN 705	Collars
DIN 835	Double Ended Studs
DIN 908	Int. hex plugs with DIN 3858 Threads (Whitworth parallel pipe thread).
DIN 908	Int. hex plugs with ISO 228-1 Threads
DIN 939	Metal Stud for screwing into cast iron
DIN 988	Shim and Backup Washers
DIN 2093	Disc Springs
DIN 3015-3	WeldPlate / Deckplates / Coverplate / Stacking Bolt
DIN 3861	Cutting Rings
DIN 3869	ED Seal
DIN 3870	24 Degree Tube Nuts
DIN 5296	Rings
DIN 5419	Felt Sealing Washers
DIN 6319	Spherical Washers
DIN 7349	Plain Washers for Bolts with Heavy Clamping Sleeves
DIN 11023	Linch Pins
DIN 71805	Housings and Circlips for Tie Rod Joints
DIN 1472	Grooved Pins – Half Length taper grooved
Fiat 10112/03	Hexagon Nuts For Severe Applications
Fiat 10118	Self-Locking Elastic Flange Hexagon Nuts
Fiat 10129	Self-Locking Hexagon Nuts for Minor Applications
Fiat 10133/03	Prev Torq Hex Nuts with Spring for Severe Applications
Fiat 10137	Nut, Hexagon Toothed Flange
Fiat 10139	Hexagon Collar Staking Nuts
Fiat 10142	Wing Nuts
Fiat 10145	Square Nuts
Fiat 10145/01	Rectangular Nuts
Fiat 10146	Prevailing Torque Hex Nuts with Metal Insert – Severe applications
Fiat 10146/01	Prevailing Torque Hex Thin Nuts with Metal Insert
Fiat 10148	Self-Locking Hex Nuts w/Captive Spring Washer
Fiat 10150	Prev Torq Hex Two Piece Cap Nuts with Polyamide Inserts
Fiat 10154	Piloted Square Nuts to be Retained by Cage or Welding
Fiat 10163	Prevailing Torque Thin Hex Nuts for Projection Welding
Fiat 10165	Projection Weld Threaded Bushings
Fiat 10173	Machined Washers Metric
Fiat 10182	Lock Plates for Threaded Fasteners
Fiat 10214	Medium-Length Tap End Studs
Fiat 10219	Long Tap End Studs
Fiat 10227	Extra Long Tap End Studs
Fiat 10232	Double End Studs
Fiat 10252	Helical Screw Thread Inserts – Regular and Screw-Lock
1341840Fiat 10312/02	Hexagon Bolts – Thread Rolled After Hardening and Tempering
Fiat 10312/03	Hexagon Bolts For Severe Applications
Fiat 10312/04	Hexagon Bolts For Severe Applications
Fiat 10379	Cone Point Wing Screws
Fiat 10412	Square Head Bolts

Standard Parts

Number	Standard description
Fiat 10413	Screws with Collars
Fiat 10452	Pan Head Square Neck Bolts
Fiat 10453	Spherical Projection Screws for Projection Welding
Fiat 10453/01	Cone Point Screws for Projection Welding
Fiat 10453/02	Elongated Projection Weld Screws
Fiat 10453/20	Spherical Projection Pins for Projection Welding
Fiat 10457	Welding Studs – Special Threads
Fiat 10514	Slotted Cheese Head Bolts
Fiat 10518	Slotted Countersunk Head Screws
Fiat 10631/02	Pan Head PZ Cross Recess Tapping Screws with Wide Flange
Fiat 10638	Self-Drilling Tapping Screws W/ PZ C/R Pan Head
Fiat 10653/01 & /02	Hex Std & Large Washer Head Tapping Screw for Soft Materials
Fiat 10654	Pan Head PZ Cross Recess Tapping Screws for Soft Material
Fiat 10655	Raised Countersunk head PZ Cross Recess Tapping Screws
Fiat 10656	Countersunk head PZ Cross Recess Tapping Screws
Fiat 10670	Hex Head Tapping Screws
Fiat 10710	Nut and Screw Protective Caps
Fiat 12128	Thin Narrow Button Head Semitubular Rivets
Fiat 12135	Flat Head Threaded Tubular Rivets
Fiat 12135/01	Flat Head Closed End Threaded Tubular Hexagon Rivets
Fiat 12136 & 01	Flat Head Threaded Tubular Hexagon Rivets
Fiat 12140	Button Head Tapping Screws
Fiat 12252	Safety Retainers for Shafts
Fiat 12506	Pin, Round End Dowel
Fiat 12508	Pin, Two Diameter Locating
Fiat 12520	Slotted Setscrews
Fiat 12706	PZ Cross-Recessed Raised Thin Cheese Head Bolts
Fiat 12717	Washers for countersunk Head Screws
Fiat 12753	Stud Fasteners
Fiat 12753/41	Blanking Plugs
Fiat 12753/43	Body Shell Hole Blanking Plugs
Fiat 12787	Spring Nuts
Fiat 12790	Spring Nuts
Fiat 12790/01	Spring Nuts for Metric Thread Screws
Fiat 12791	Quick Operating Fasteners _Grommets and Nuts
Fiat 12794	Caged Nuts
Fiat 13106/01	Tie-Rod End Yokes
Fiat 13106/02	Tie-Rod Adjusting Sleeves
Fiat 13106/03	Tie-Rod End Clevis Joint Pins
Fiat 13130/01	Tie-Rod Ball and Socket Joint Heads-Light Duty
Fiat 13130/02	Upsetting Ball Studs for Tie Rod Ball and Socket Joints
Fiat 13130/03	Spring Lock
Fiat 13140	Tie-Rod Ball and Socket Joints Heavy Duty
Fiat 13140/03	Threaded Ball Studs for Rod Joint Sockets
Fiat 14140/41	Hexagonal-head screw hose clamps
Fiat 14140/42	Hex Flanged Head Screw Hose Clamps
Fiat 14146	Self-Tightening Hose Clamps
Fiat 14150	Snap-on Hose Band Clamps
Fiat 14151	Double Ratchet Lock Elastic Hose Clamps
Fiat 14221	Sleeve Tube Fittings Nuts
Fiat 14222	Sleves – Tube Fittings Sleeves
Fiat 14256	One-Way Pipe Banjo Fittings Union Screws
Fiat 14261	Banjo Fittings
Fiat 14265/02	Straight End Fittings Parallel Threaded
Fiat 14267	Lock Nuts for Fittings
Fiat 14268	Ferrules for Fittings
Fiat 14269	Rectangular Sealing Washers for Pipe Fittings
Fiat 14281	Formed (dual-cone) tube end nuts

Number	Standard description
Fiat 14281/01	Male unions for pipes with swolen ends
Fiat 14293	Formed Tube End Fittings for Air Conditioning Systems – Welded Type
Fiat 14294	Tube Nuts for Air Conditioning Systems
Fiat 14295	Tube Nuts for Air Conditioning Systems
Fiat 14517	Rivet Plugs
Fiat 14530	Hex Head Threaded Plugs
Fiat 14534	Round Head Threaded Plugs with Hexagon Socket
Fiat 14540	Fiat 14256
Fiat 14545	Taper Thread Plugs
Fiat 14548	Slotted Threaded Plugs
Fiat 14551	Steel Plugs
Fiat 14552	Hexagon Socket Head Taper Thread Plugs
Fiat 14553	Hexagon Head Magnetic Threaded Plugs
Fiat 14561	Open and Spring Clips
Fiat 14562	Cable and Tubing Spring Clips
Fiat 14564	Cable and Tubing Snap-in clips
Fiat 14579	Cage for Square Nuts
Fiat 14607	Rectangular Section Seals
Fiat 14618	O-Ring
Fiat 14618/02	Washer, Sealing – Special seal rings type
Fiat 14649	Grease Relief Valves
Fiat 17309/05	Flexible Rubber Fuel Pipelines
Fiat 19225	Allen Wrenches
Fiat 91107/13	Single Conductor Copper Cables W/Class T2 Insulation
Fiat 91220	Protective Sheaths for Wiring
Fiat 91223	Fixing Clips
Fiat 91229	Heat Shrink Sleeves
Fiat 91230	Grommets – See STPS550 (47406479)
Fiat 91231	Insulating Grommets for Conductors See STPS550 (47406479)
Fiat 91310	Terminal D/4
Fiat 91328	Cable Ties
Fiat 91332/48	Water Tight Connectors
Fiat 91351	Wire Terminals and Plug Seals
Fiat 91815	Blade Fuses for Electrical Systems with Insulating Body
Fiat Hitachi 2405/02	End Fittings with Metric Thread Male Connection 45D Elbow
Fiat Hitachi 2405/02	End Fittings with Metric Thread Male Connection 90D Elbow
Fiat Hitachi 2405/02	End Fittings with Metric Thread Male Connection Straight Long
Fiat Hitachi 2405/02	End Fittings with Metric Thread Male Connection Adjustable Run Tee
ISO 1179	Connector Male ORFS BSP
ISO 8745	Grooved Pins – Half Length taper grooved
ISO 12151-2	Elbow, 90D 24D O-Ring Cone Light Duty
Iveco 11-0102	Hexagon Head bolts.
Iveco 11-0118	Flanged Hexagon Head Bolts (Heavy Series)
Iveco 11-0119	High Tensile Flanged Hexagon Head Bolts (Heavy Series)
Iveco 11-0120	Flanged Hexagon Head Through Bolts (Heavy Series)
Iveco 11-0152	Double Ended Studs – Medium Root (Metal Side)
Iveco 11-0156	Double Ended Studs – Long Root (Metal Side)
Iveco 11-0235	Hexagon Head Self Tapping Screws with Large Flange
Iveco 11-0255	Round Head Self-Tapping Screws for Plastic materials
Iveco 11-0410	Flat Washers
Iveco 11-0766	Cable Tie
Iveco 11-4311	Seal Ring - Brass
Iveco 11-4730	Screw Plugs With External Hexagon Heads
Iveco 11-4818	O-Rings
ISO 7380-2	Hex Socket Flange (collar) Button Head Screws
Non-Standard	Pipe Plugs with BSPP/BSPF Threads
Non-Standard	Screw and Washer assembly
Non-Standard	Banjo Sealing Washers (Dowty)

Standard Parts

Number	Standard description
Parker WZ	Composite Sealing Washers.
Non-Standard	Banjo Bolts
Non-Standard	Banjo Couplings
Non-Standard	Adapter Bushing NPTF X Straight Thread
Parker 12S40MXS	Branch Tee – 37D male BSPP ORB Branch
Parker 14FSV	Female 45 Degree Flare Swivel Connector
Parker 30682-10-10	Female 37 D Connector Male Barb
Parker F87OMXSS	Connector- 37D male metric ORB (ISO 6149)
Parker C87OMXS	Elbow, 90D 37D male metric ORB (ISO 6149)
Parker KOR	Tube End Reducer
Parker RI-ED	Thread Reducer/Expander
Parker FF33M	Male Nipple
Parker WSV	Bulkhead Elbow
Parker W	Union Elbow
Parker EVW	Standpipe Elbow
Parker WE-R (KEG)	Male Stud Elbow
SAE J518	Hyd Split Flanges (O & K)
ORFS/Flange Elbow	ORFS/Flange Elbow FOR A407716
SAE 140230	Parker 2107 Male Pipe Elbow NPTF/NPSM Swivel
SAE J1508	Spring Clamps
JIS B2401	O-RIngs (Japanese)
Non-Standard	BSPT Lube Fittings
FOR Lock Nuts	Bulk Head Lock Nuts
EGEO	Male Metric Thread – O-Ring (ISO 6149) / EO 24D DKO Swvl
EGE-M-ED	Male Metric Thread - ED seal (ISO 9974-2) / EO 24D DKO Swvl
EGE-R-ED	Male BSPP Thread - ED seal (ISO 1179) / EO 24D DKO Swvl
Union, 60D	Union – Male BSPP 60D Cone End
Union, 60D Swivel Nut	Union – Male BSPP – Swivel Nut BSPP 60D Cone End
Pkr HMTX	Union — 37D
MB 100.011	Ford Flange Bolts
MB 202.01	Ford Pan Head W/Tooth Lock Washers
SB 150.01	Ford Hexagon Screws W/Paint Clearing Feature
BSPP Plugs	BSPP int. hex Plugs w/elastomer seal ISO 1179 ports
BSPP Plugs	BSPP ext. hex Plugs w/O.R. and retaining ring ISO 1179 ports
Parker WH10LMKDSOMD	WH-M-KDS High Pressure Banjo Elbow
Parker ¼ HPC	Parker Hex Pipe Caps
Iveco 11-0323	Prevailing Torque Hexagonal Thin Nuts w/Metal Insert
Brass Elbow	Elbow – Male-Female BSPP-BSPT

ANSI B1.5	Acme Threaded Nuts							
Part Number	Description	Nom Dia	Pitch	Height	Hex Flat		Matl	Finish
87548032	NUT, 1-5 ACME PLN	1.0	0.200	.859	1.50		STL	PLN

DIN 125
Plain Washers

Stainless Steel A4-80 per ISO 3506-1

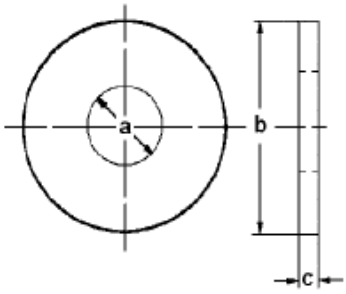

Part Number	Description	ID	0D	THICK	TYPE	HARD	Matl	Fin
51487124	Washer, M4 A4-80 PLN	4.3	9	0.8	A	-	A4-80	PLN
2975166	Washer, M5-ST ZND	5.3	10	1	B	140	ST	ZND
51479834	Washer, M6 A4-80 PLN	6.4	12.5	1.6	A	-	A4-80	PLN
2372234	Washer, M6 ST ZND	6.4	12.5	1.6	B	140	ST	ZND
51479854	Washer, M8 A4-80 PLN	8.4	17	1.6	A	-	A4-80	PLN
2975165	Washer, M8-ST ZND	8.4	16	1.6	B	140	ST	ZND
51479864	Washer, M10 A4-80 PLN	10.5	21	2	A	-	A4-80	PLN
2115309	Washer, M10-A-ST Flat ZND	10.5	21	2	A	300	ST	ZND
2981701	Washer, M10-ST ZND	10.5	20	2	B	140	ST	ZND
51479868	Washer, M12 A4-80 PLN	13	24	2.5	A	-	A4-80	PLN
2975164	Washer, M12-ST ZND	13	24	2.5	B	140	ST	ZND
8408960	Washer, 13-ST Flat ZND	13.5	24	2.5	A	300	ST	ZND
51479877	Washer, M16 A4-80 PLN	17	30	3	A	-	A4-80	PLN
56992	Washer, 17-ST Flat ZND	17	30	3	B	140	ST	ZND
2115512	Washer, 17-ST Flat ZND	17	30	3	B	300	ST	ZND
84349418	Washer,19-ST FLAT ZND	19	34	3	A/B	300	ST	ZND
2115513	Washer, M20-ST ZND	21	37	3	B	300	ST	ZND
1520648	Washer,23-ST FLAT ZND	23	39	3	B	140	ST	ZND
8408968	Washer,25-ST FLAT ZND	25	44	4	A	300	ST	ZND
1636406	Washer,43-ST FLAT ZND	43	78	7	B	140	ST	ZND

DIN 316
Wing Screws

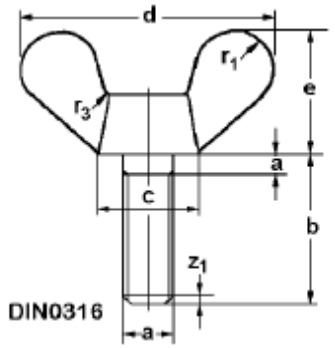

Part Number	Description	a	b	c min	d max	e max	Matl	Fin
87625617	Screw, wing M5 X 30	M5	30	8	26	13	STL	ZND
91737717	Screw, wing M8 X 25	M8	25	13	36	20	STL	ZND
82039554	Screw, wing M10 X 20	M10	20	17	51	25	STL	ZND
51408927	Screw, wing M10 X 30	M10	30	17	51	25	STL	ZND
47505339	Screw, wing M10 X 50	M10	50	17	51	25	STL	ZND

DIN 557
Metric Square
Nut

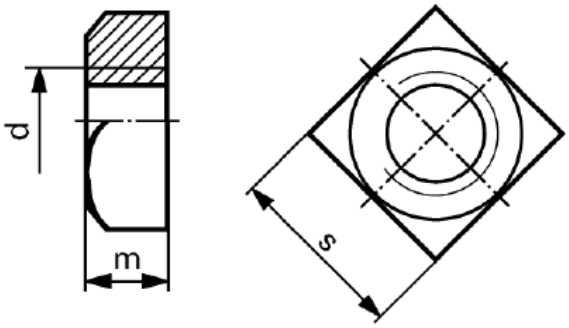

Part Number	d	m	s	Material	Finish
48056266	M16	13	24	10	ZND

DIN 608 FLAT COUNTERSUNK HEAD SQUARE NECK BOLTS WITH SHORT SQUARE (PLOW BOLT)

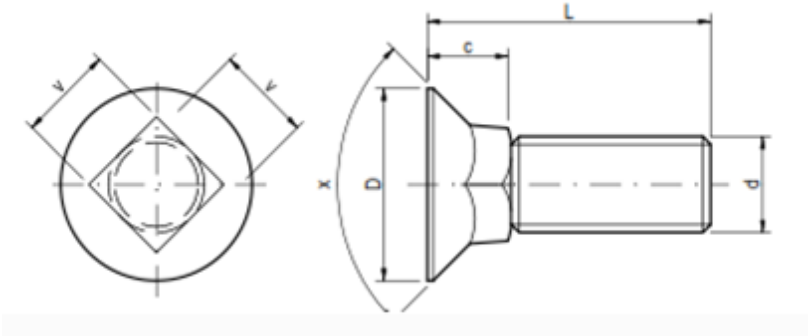

Part Number	d	L	c	D	x	v	Mat'l	Fin
51577252	M10	25	8	19	90°	10.0	10.9	PLN
47848415	M12	50	10.5	24	90°	12.0	10.9	PLN
47510146	M12	100	10.5	24	90°	12.0	8.8	ZND

DIN 609 Fit Bolts

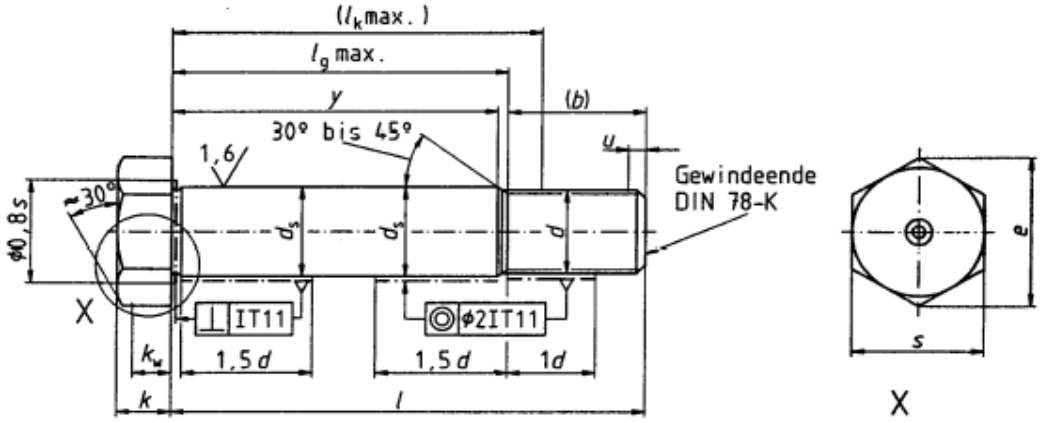

Part Number	d	L	b	lg max	k	s max	Matl	Fin
51474778	M16	48	25	24	10	24	10.9	ZND
51474780	M16	80	27	54	10	24	10.9	ZND
51474781	M16	85	27	59	10	24	10.9	ZND
936715	M20	105	30.5	75.7	12.5	30	8.8	PLN
47566055	M20	105	30.5	75.7	12.5	30	8.8	ZND
52826	M24	110	36.5	74.8	15	36	8.8	PLN
47554514	M24	110	36.5	74.8	15	36	8.8	ZND

DIN 705
Collars

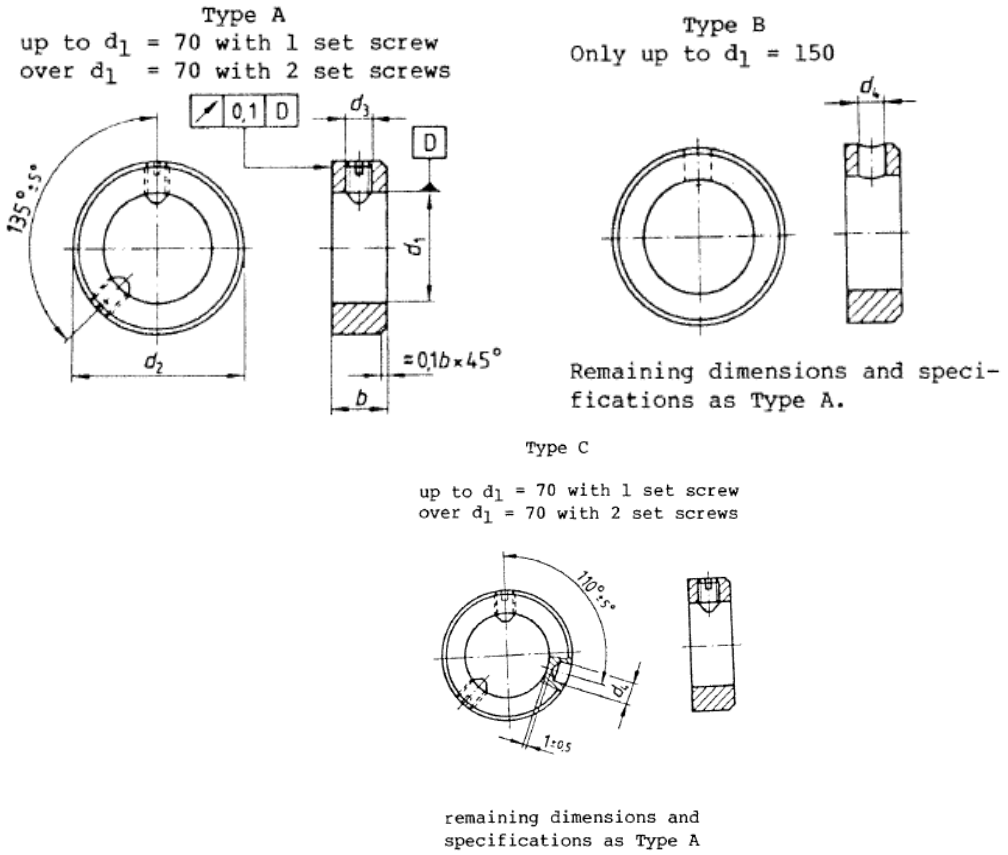

Part Number	Type	d_1	b	d_2	d_3	d_4	Finish
1838279	A	12	12	22	M6		ZND
1838458	A	30	16	45	M8		ZND

DIN 835
Metal Studs

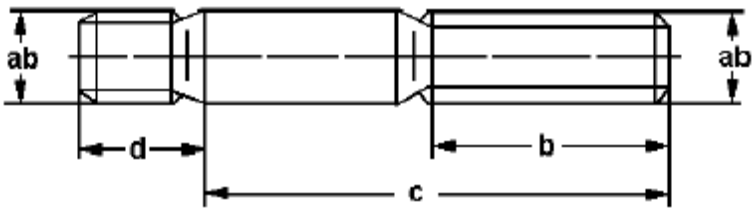

Part Number	Description	ab	b	c	d	Mat'l	Fin
*48119107	Stud, M12X1.75X24X70	M12	30	70	24	10.9	ZND
*48119111	Stud, M12X1.75X24X80	M12	30	80	24	10.9	ZND

* Short thread run-out of 2.2mm max on both ends

DIN 908 Plugs with DIN 3858 Threads (Whitworth parallel pipe thread).

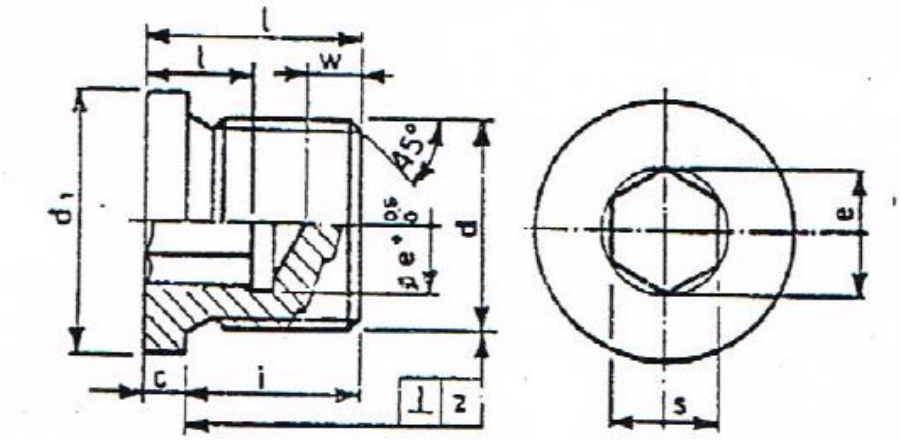

Part #	Threads	c	d_1	e	i	l	s	t min	w min	Mat'l	Fin
47569828	R 3/8	3	22	9.4	12	15	8	7.5	3	STL	ZND

DIN 908 Plugs with ISO 228-1 Threads

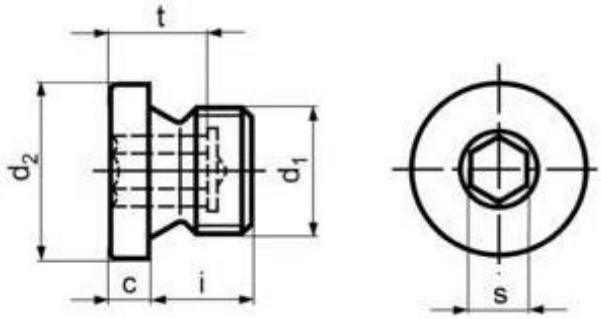

Part #	d_1Threads	c	d_2	i	t	s	Mat'l	Fin
48154286	G 1/8 A	3	14	8	5	5	STL	ZND

DIN 938
Metal Studs

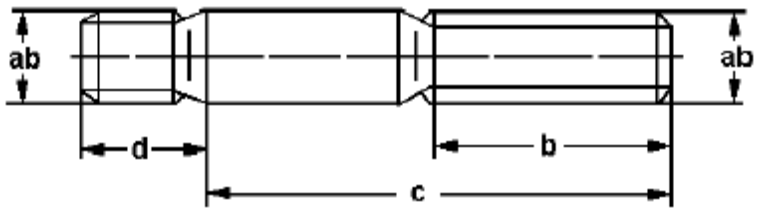

Part Number	Description	ab	b	c	d	Mat'l	Fin
92666243	Stud, M8 x 40	M8	22	40	8	8.8	ZND
51517907	Stud, M8 x 80	M8	22	80	8	8.8	ZND
90415207	Stud, M10 x 25	M10	18	25	10	8.8	ZND

DIN 939
Metal Studs

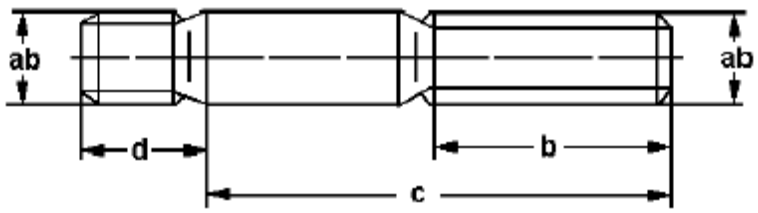

Part Number	Description	ab	b	c	d	Mat'l	Fin
51649565	Stud, M8 x 40	M8	22	40	10	8.8	ZND
91776821	Stud, M10 x 30	M10	26	30	12	10.9	ZND
1900038135370	Stud, M10 x 35	M10	26	35	12	8.8	ZND
91796077	Stud, M10 x 35	M10	26	35	12	A2-70	BLO
92649614	Stud, M10 x 45	M10	26	45	12	10.9	ZND
47803807	Stud, M10 x 55	M10	26	55	12	8.8	ZND
91715557	Stud, M10 x 60	M10	26	60	12	8.8	ZND
91715558	Stud, M10 x 65	M10	26	65	12	8.8	ZND
47813084	Stud, M10 x 80	M10	26	80	12	8.8	ZND
47813086	Stud, M10 x 85	M10	26	85	12	8.8	ZND
47754381	Stud, M10 x 90	M10	26	90	12	8.8	ZND
87477184	Stud, M12 x 30	M12	24	30	15	8.8	ZND
47372451	Stud, M12 x 40	M12	24	40	15	8.8	ZND
47659159	Stud, M12 x 45	M12	30	45	15	10.9	ZND
47650989	Stud, M12 x 75	M12	30	75	15	8.8	ZND
48057140	Stud, M16 x 50	M16	38	50	20	8.8	PLN
87534160	Stud, M16 x 65	M16	38	65	20	8.8	PLN
92646911	Stud, M16 x 65	M16	38	65	20	10.9	DAC
92646909	Stud, M16 x 70	M16	38	70	20	10.9	DAC
47362429	Stud, M16 x 85	M16	38	85	20	10.9	DAC
84561119	Stud, M18x1.5 x 60	M18X1.5	42	60	22	10.9	ZND
84559734	Stud, M18x1.5 x 70	M18X1.5	42	70	22	10.9	ZND
47407067	Stud, M18x 1.5 x 170	M18X1.5	48	170	22	10.9	ZND
51568368	Stud, M20 x 40	M20	31	40	25	8.8	ZND
92039126	Stud, M20 x 60	M20	46	60	25	10.9	ZND
84569160	Stud, M20 x 100	M20	46	100	25	8.8	ZND
47659165	Stud, M20 x 100	M20	46	100	25	10.9	ZND
47722015	Stud, M20 x 125	M20	46	125	25	10.9	ZND

DIN 940
Metal Studs

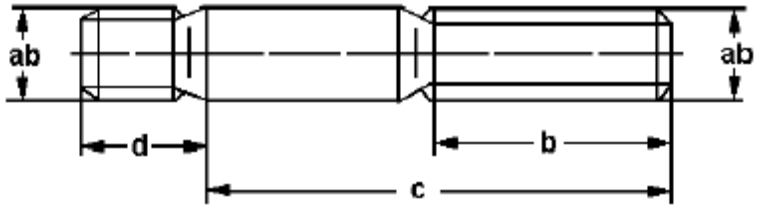

Part Number	Description	ab	b	c	d	Mat'l	Fin
*47690807	Stud, M16 x 45	M16	38	45	40	10.9	ZND

* Short thread run-out of 2.5mm max on both ends

DIN 988 Shim and Support Washers

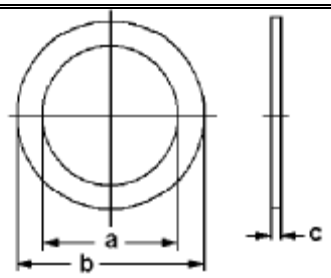

DIN0988

Part Number	a	b	c	MAT	FIN	TYPE
92838659	12	18	1.2	STL	PLN	SHIM
92298385	14	20	1.5	STL	ZND	SHIM
1416080	18	25	0.2	STL	ZND	SHIM
8404115	18	25	0.2	STL	ZND	SHIM
87034239	25	36	2	STL	PLN	SUPT
84218888	28	40	2	STL	PLN	SHIM
87578961	32	45	0.1	STL	PLN	SHIM
87578962	32	45	0.15	STL	PLN	SHIM
397638	32	45	0.2	STL	PLN	SHIM
87582897	32	45	0.3	STL	PLN	SHIM
87578963	32	45	0.5	STL	PLN	SHIM
87039406	35	45	0.1	STL	PLN	SHIM
87039407	35	45	0.15	STL	PLN	SHIM
87039408	35	45	0.3	STL	PLN	SHIM
87039409	35	45	0.5	STL	PLN	SHIM
87644291	35	45	2.0	STL	PLN	SHIM
47636381	36	45	1.0	STL	PLN	SHIM
47987402	36	45	1.0	STL	ZND	SHIM
84218890	35	45	2.5	STL	PLN	SHIM
583873	37	47	0.5	STL	PLN	SHIM
583872	37	47	1.0	STL	PLN	SHIM
87302190	42	52	0.1	STL	PLN	SHIM
87302191	42	52	0.15	STL	PLN	SHIM
87302192	42	52	0.3	STL	PLN	SHIM
87302193	42	52	0.5	STL	PLN	SHIM
47987403	42	52	0.5	STL	ZND	SHIM
87025487	50	62	0.1	STL	PLN	SHIM

DIN 988 – Continued						
Part Number	a	b	c	MAT	FIN	TYPE
87033533	50	62	0.15	STL	PLN	SHIM
87025488	50	62	0.3	STL	PLN	SHIM
87025489	50	62	0.5	STL	PLN	SHIM
47669652	50	62	2.0	STL	PLN	SHIM
87345883	55	68	0.1	STL	PLN	SHIM
87345884	55	68	0.15	STL	PLN	SHIM
87345886	55	68	0.2	STL	PLN	SHIM
87345889	55	68	0.3	STL	PLN	SHIM
87345890	55	68	0.5	STL	PLN	SHIM
87345893	55	68	1	STL	PLN	SHIM
87345894	55	68	3	STL	PLN	SHIM
47786542	60	75	0.1	STL	PLN	SHIM
47786545	60	75	0.15	STL	PLN	SHIM
556885	60	75	0.3	STL	PLN	SHIM
47786547	60	75	0.5	STL	PLN	SHIM
87039410	62	72	0.15	STL	PLN	SHIM
51614168	62	72	0.5	STL	PLN	SHIM
51460556	62	72	0.8	STL	PLN	SHIM
51460558	62	72	1.0	STL	PLN	SHIM
8401853	65	85	0.1	STL	PLN	SHIM
47550063	65	85	0.15	STL	PLN	SHIM
8401852	65	85	0.3	STL	PLN	SHIM
8401877	65	85	0.5	STL	PLN	SHIM
48192439	65	85	0.6	STL	PLN	SHIM
48192441	65	85	0.8	STL	PLN	SHIM
48192442	65	85	1.0	STL	PLN	SHIM
87039411	72	80	0.15	STL	PLN	SHIM
51489138	80	90	0.1	STL	PLN	SHIM
47550175	80	90	0.15	STL	PLN	SHIM
51489169	80	90	0.3	STL	PLN	SHIM
51489170	80	90	0.5	STL	PLN	SHIM
48192443	80	90	0.8	STL	PLN	SHIM
48192444	80	90	1.0	STL	PLN	SHIM

DIN 988 – Continued						
Part Number	**a**	**b**	**c**	**MAT**	**FIN**	**TYPE**
47669663	80	90	2.0	STL	PLN	SHIM
556888	80	100	0.1	STL	PLN	SHIM
92136400	85	105	2.0	STL	PLN	SHIM
87033534	90	110	0.1	STL	PLN	SHIM
87033535	90	110	0.15	STL	PLN	SHIM
87033536	90	110	0.3	STL	PLN	SHIM
87033537	90	110	0.5	STL	PLN	SHIM
87033538	100	120	0.1	STL	PLN	SHIM
87033541	100	120	0.15	STL	PLN	SHIM
87033542	100	120	0.3	STL	PLN	SHIM
87033543	100	120	0.5	STL	PLN	SHIM
51460560	100	120	0.8	STL	PLN	SHIM
51460563	100	120	1.0	STL	PLN	SHIM
47669643	100	120	2.0	STL	PLN	SHIM
87033544	110	140	0.1	STL	PLN	SHIM
87033545	110	140	0.15	STL	PLN	SHIM
87033546	110	140	0.3	STL	PLN	SHIM
87033548	110	140	0.5	STL	PLN	SHIM
87743033	125	140	0.1	STL	PLN	SHIM
87743034	125	140	0.15	STL	PLN	SHIM
87743035	125	140	0.3	STL	PLN	SHIM
87743036	125	140	0.5	STL	PLN	SHIM

DIN 2093
Disc Springs
Material: Steel
per DIN 2093

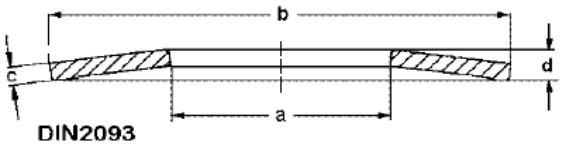

Part Number	Series	a	b	c	d	Material	Finish
84398982	A	6.2	12.5	0.7	1.0	STL	
300368	A	10.2	20	1.1	1.55	STL	
84814924	B	16.3	31.5	1.25	2.15	STL	
48149297	C	31	63	1.8	4.15	STL	PHC
48149296	B	31	63	2.5	4.25	STL	PHC
87352792	A	31	63	3.5	4.9	STL	
84820006	C	41	80	2.25	5.2	STL	

DIN 3015-1
Spacer - Stacking Bolt

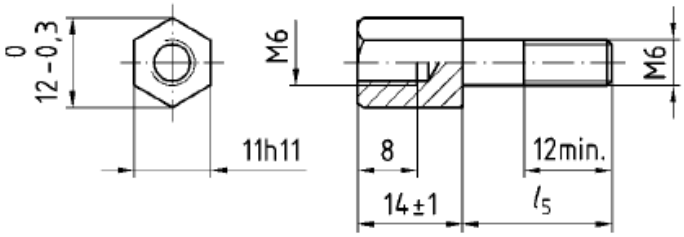

Part Number	Description	l_5	Material
90448828	DIN3015-L-AS-1-W1	20	W1
91772269	DIN3015-L-AS-4-W1	35	W1

DIN 3015-1
Locking Plate

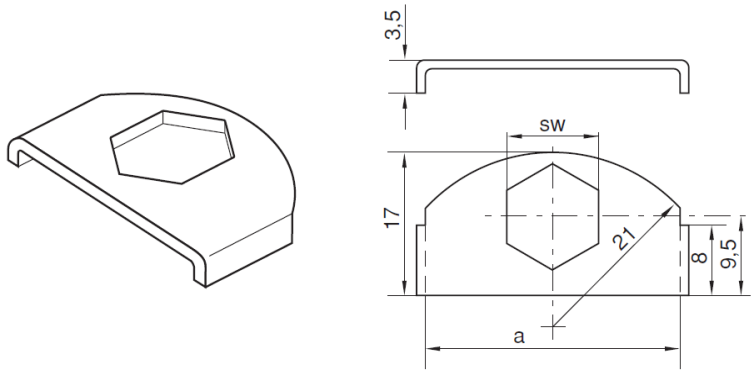

Part Number	Description	SW	Material
91775933	DIN3015-L-VS-W1	11	W1

DIN 3015-3
Stacking Bolt

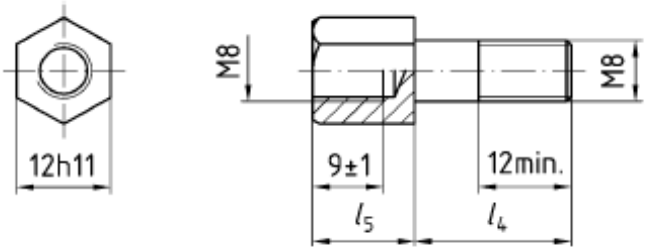

Part Number	Description	l_4	l_5	Material
90448829	DIN3015-Z-AS-2-W1	20	13	W1
90448830	DIN3015-Z-AS-3-W1	29	15	W1
90448831	DIN3015-Z-AS-4-W1	34	15	W1
90448832	DIN3015-Z-AS-5-W1	46	15	W1

DIN 3015-3
Weld Plate

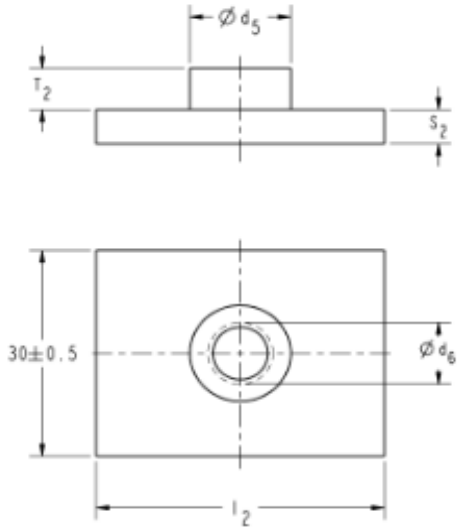

Part Number	Description	l_2	d_6	T_2	s_2	d_5	Material	Finish
936260	DIN 3015-Z-AP-5-W1	110	M8	6	5	14	W1	-
51617284	DIN 3015-Z-AP-4-W1	85	M8	6	5	14	W1	-
92828621	DIN 3015-Z-AP-3-W1	70	M8	6	5	14	W1	-
92798119	DIN 3015-Z-AP-3-W1-ZND	70	M8	6	5	14	W1	ZND
92087492	DIN 3015-Z-AP-2-W1	55	M8	6	5	14	W1	-

DIN 3015-3
Cover Plate

Option: Parts can be galvanized in accordance with DIN 3015-3 requirements

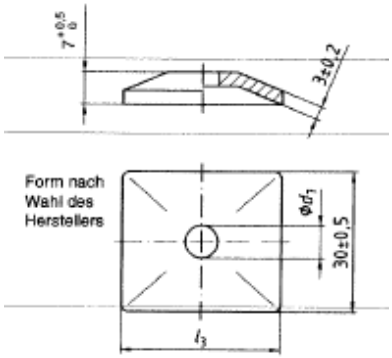

Part Number	Description	l_3	d_7	Material	Finish
2930305	DIN 3015-Z-DP-1-W1-ZND	34	7	W1	ZND
72180326	DIN 3015-Z-DP-2-W1-ZND	52	9	W1	ZND
87000230	DIN 3015-Z-DP-3-W1-ZND	65	9	W1	ZND
1186005	DIN 3015-Z-DP-4-W1-ZND	79	9	W1	ZND
87000231	DIN 3015-Z-DP-5-W1-ZND	102	9	W1	ZND

DIN 3015-3
Locking Plate

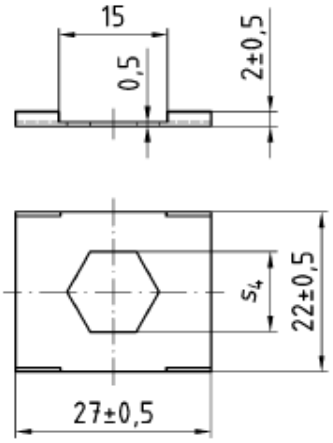

Part Number	Description	S_4	Material
90449460	DIN3015-Z VS-3-W1	12.1	W1

DIN 3861
24 Degree (ISO 8434-1)
Cutting RIngs

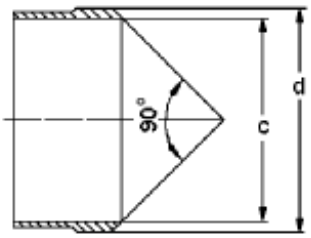

DIN3861

Part Number	Description	Type	Pipe	ID	OD	Mat.	Fin.
47967735	Ferrule, Cone Type, L6	L	6	6	9	STL	PLN
10589	Ferrule, Cone Type, L10	L	10	10	13	STL	PLN
84209925	Ferrule, Cone Type, L12	L	12	12	15	STL	PLN
84390799	Ferrule, Cone Type, L22	L	22	22	25	STL	PLN
47499878	Ferrule, Cone Type, S6	S	6	6	12	STL	PLN
10663	Ferrule, Cone Type, S16	S	16	16	22	STL	PLN

DIN 3870
24 Degree (ISO 8434-1)
Coupling Nuts

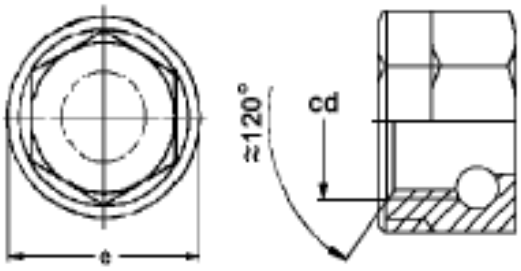

DIN3870

Part Number	Description	Type/Duty	Tube Size	Thread DiaXPitch	Hex	Mat.	Fin.
87774044	Nut, L6 Coupling	L	6	M12X1.5	14	STL	ZND
84209926	Nut, L12 Coupling	L	12	M18X1.5	22	STL	ZND
47698734	Nut, Tube L15	L	15	M22X1.5	27	STL	ZND
47698739	Nut, Tube L18	L	18	M26X1.5	32	STL	ZND
84390800	Nut, L22 Coupling	L	22	M30X2	36	STL	ZND
47499830	Nut, S6 Coupling	S	6	M14X1.5	17	STL	ZND
10628	Nut, Tube S12	S	12	M20X1.5	24	STL	ZND
10667	Nut, Tube S16	S	16	M24X1.5	30	STL	ZND

DIN 5296 Rings

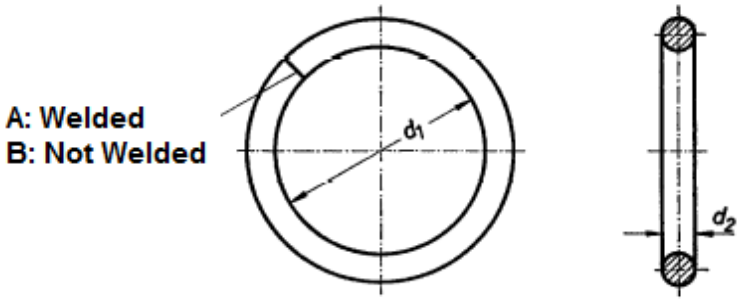

Part Number	Style	d_1	d_2	Mat.	Fin.
972467	B: Not Welded	30	4.0	STL	ZNM

DIN 5419
Felt Sealing
Washers

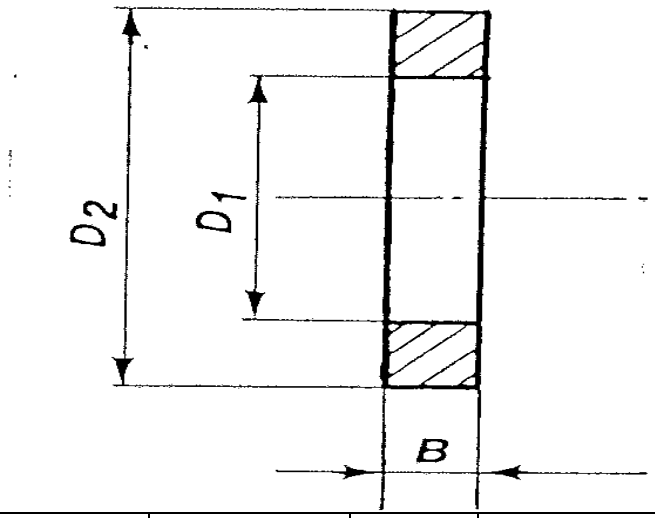

Part Number	Description	D1	D2	B	Material
220008	Washer, Sealing 25 X 37 X 5 MM	25	37	5	Felt
220009	Washer, Sealing 30 X 42 X 5 MM	30	42	5	Felt
220010	Washer, Sealing 35 X 47 X 5 MM	35	47	5	Felt
220011	Washer, Sealing 40 X 52 X 5 MM	40	52	5	Felt
220012	Washer, Sealing 45 X 57 X 5 MM	45	57	5	Felt
300891	Washer, Sealing 50 X 66 X 6.5 MM	50	66	6.5	Felt
309088	Washer, Sealing 65 X 81 X 6.5 MM	65	81	6.5	Felt
220014	Washer, Sealing 80 X 98 X 7.5 MM	80	98	7.5	Felt
220015	Washer, Sealing 85 X 103 X 7.5 MM	85	103	7.5	Felt

DIN 6319
Spherical
Washers

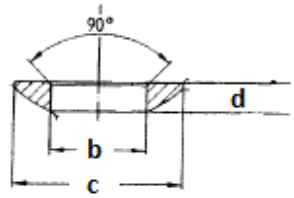

Form C

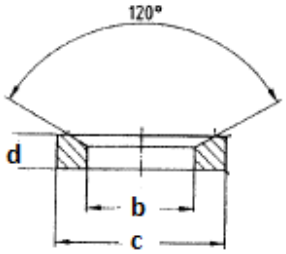

Form D
Form G

Part Number	Description	Type / Form	b	c	d		Mat.	Fin.
84226029	Washer, Spherical D12	D	12	21	4.2		STL	PLN
48001144	Washer, Spherical D12	D	12	21	4.2		STL	ZND
219115	Washer, Spherical C17	C	17	30	5.3		STL	PLN
583243	Washer, Spherical D19	D	19	30	6.2		STL	PLN
90488406	Washer, Spherical C21	C	21	36	6.3		STL	DAC
90488407	Washer, Spherical D23.2	D	23.2	36	7.5		STL	DAC
306471	Washer, Spherical C25	C	25	44	8.2		STL	PLN
47767053	Washer, Spherical C25	C	25	44	8.2		STL	DAC
47767054	Washer, Spherical D28	D	28	44	9.5		STL	DAC
3405020	Washer, Spherical G28	G	28	44	10		STL	PLN
216163	Washer, Spherical C31	C	31	56	11.2		STL	PLN
47800906	Washer, Spherical C31	C	31	56	11.2		STL	DAC
830644	Washer, Spherical D35	D	35	56	12		STL	PLN
47800905	Washer, Spherical D35	D	35	56	12		STL	DAC
1054600	Washer, Spherical C37	C	37	68	14		STL	PLN
1054599	Washer, Spherical D42	D	42	68	15		STL	PLN

DIN 7349
Plain Washers
for Bolts with
Heavy Sleeves

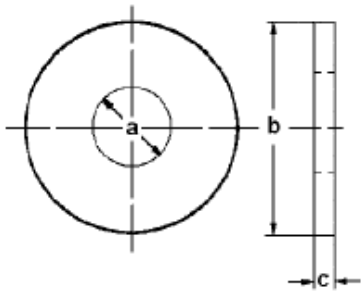

Part Number	Description	a	b	c	Matl	Fin
63678	Washer, 6.4 Flat STL ZND	6.4	17	3	STL	ZN
57111	Washer, 8.4 Flat STL ZND	8.4	21	4	STL	ZN
933615A1	Washer, 8.4 Flat STL PLN	8.4	21	4	STL	PLN
388702A1	Washer, 8.4 Flat STL ZND	8.4	21	4	STL	ZND
934759R1	Washer, 10.5 Flat STL PLN	10.5	25	4	STL	PLN
2975160	Washer, 10.5 Flat STL ZND	10.5	25	4	STL	ZN
906059R1	Washer, 13 Flat HTS ZND	13	30	6	HTS	ZND
933829R1	Washer, 13 Flat STL PLN	13	30	6	STL	PLN
2975473	Washer, 13 Flat STL ZND	13	30	6	STL	ZN
2974088	Washer, 17 Flat STL ZND	17	40	6	STL	ZN

DIN 11023
Linch Pins

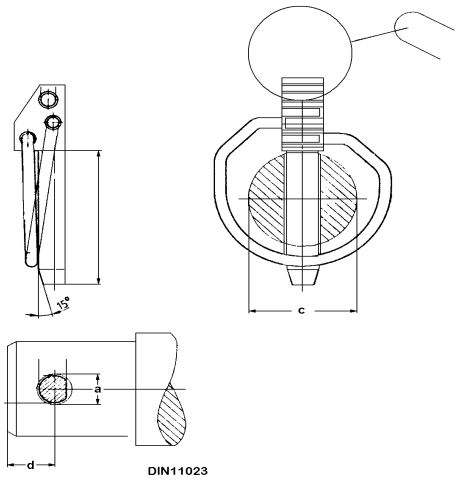

Part Number	Description	Hole a	Len b	Dia S c	LOC d		Matl	Fin
87036460	Pin, 5 x 32	5	32	25	8			
47406566	Pin, 10 x45	10	45	32	14			
51615425	Pin, 12 x 45	12	45	32	18			
84470494	Pin, 12 x 55	12	55	45	18			

Housings and Circlips for Tie Rod Joints per DIN 71805

Legacy parts listed in Case Standard XM-002 under DIN 71805

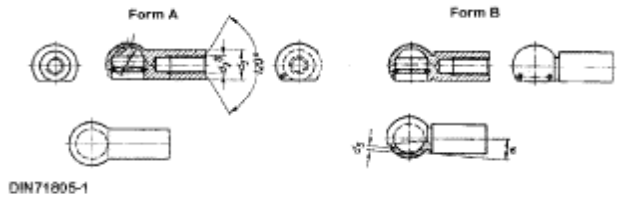

Part Number	Description	Type	Ball			
87594251	Socket A 10 LH	A	10			
87632795	Clip, Spring S10	S	10			
86999310	CLIP, S13-A2J SPRING	S	13			
10976	Socket, B16-A3B ISO 4042	B	16			
2700099	Socket B13-A2B ISO 4042	B	13			
43806	Clip, Spring S13-A3B	S	13			
43807	Clip, Spring S16-A3B	S	16			
87521455	Clip, Spring S16-BZN	S	16			
47547085	Socket, A 13	A	13			

Fiat 10112/03 Hexagon Nuts For Severe Applications

Material Fiat 52605/03 Non-Preferred

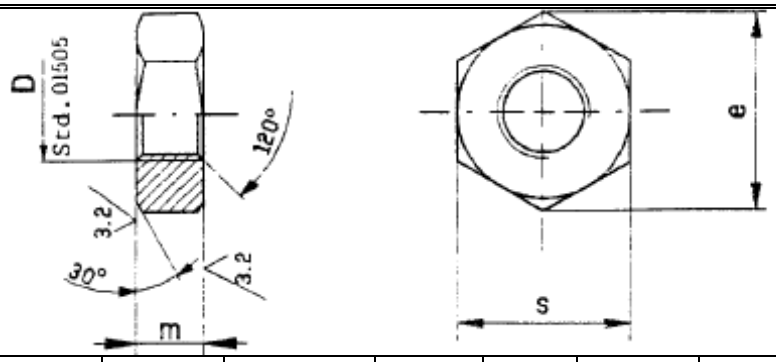

Part Number	Description	Nom Dia	Pitch	Height	Hex Flat		Matl	Finish
15501321	NUT,SEVERE M14X1.5X22 R10 ZND	14	1.5	11	22		10	ZND
15502611	NUT,SEVERE M16X1.5	16	1.5	13	24		8	ZND
15501421	NUT, SEVER M16X1.5X13 R10 ZND	16	1.5	13	24		10	ZND

Fiat 10118 Self-Locking Elastic Flange Hex Nuts	Material Fiat 52605/01 Non-Preferred	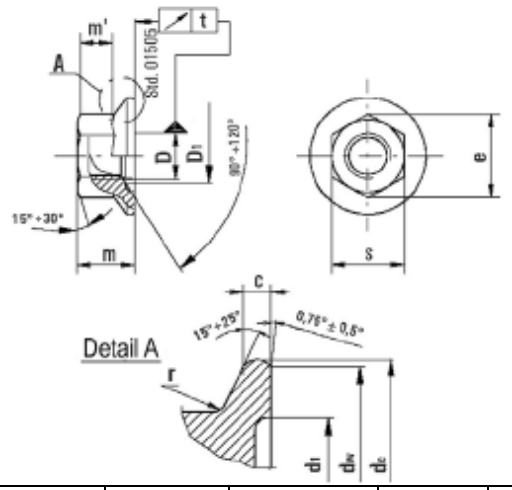

Part Number	Description	S	m	D1	dc	Material	Finish
13046011	Nut, Flg Lock M5	8	5	5.75	13	R50	ZND
13046111	Nut, Flg Lock M6	10	6	6.75	16	R50	ZND
92130070	Nut, Flg Lock M6	10	6	6.75	16	R50	BGM
92251024	Nut, Flg Lock M6	10	6	6.75	16	R50	ZN-NI-4
92092907	Nut, Flg Lock M8	13	8	8.75	19	R50	BGM
90391791	Nut, Flg Lock M8	13	8	8.75	19	R50	DAC
13046211	Nut, Flg Lock M8	13	8	8.75	19	R50	ZND

Fiat 10129 Self-Locking Hex Nuts for Minor Appl	Material Fiat 52605/01 Non-Preferred	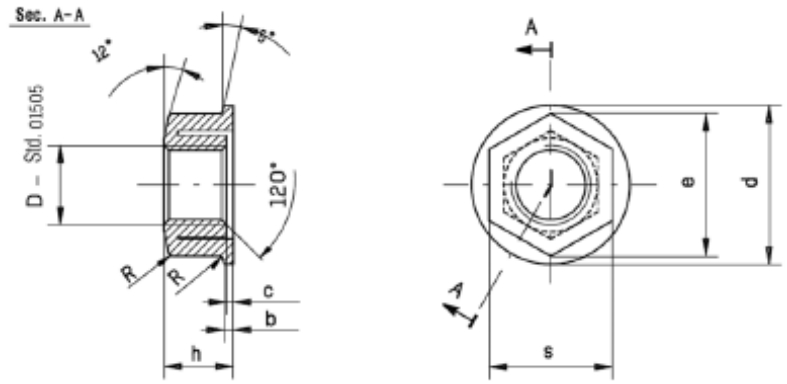

Part Number	Description	Nom Dia	Pitch	Height	Hex Flat	Style	Matl	Finish
14084011	Nut, P/T M4 R40 ZND “A”	4	0.7	3.60	7	A	R40	ZND
14084111	Nut, P/T M5 R40 ZND “A”	5	0.8	4.35	8	A	R40	ZND
14084114	Nut, P/T M5 R40 DAC “A”	5	0.8	4.35	8	A	R40	DAC
14084211	Nut, P/T M6 R40 ZND “A”	6	1	5.15	10	A	R40	ZND
14084215	Nut, P/T M6 R40 ZND “A”	6	1	5.15	10	A	R40	ZND
14084411	Nut, P/T M8 R40 ZND “A”	8	1.25	6.90	13	A	R40	ZND
14084611	Nut, P/T M5 R40 ZND “B”	5	0.8	4.35	8	B	R40	ZND
14084811	Nut, P/T M8 R40 ZND “B”	8	1.25	6.90	13	B	R40	ZND
14084814	Nut, P/T M8 R40 DAC “B”	8	1.25	6.90	13	B	R40	DAC

Fiat 10133/03 Prev Torq Hex Nuts with Spring for Severe Applications	Material: A2-70 Stainless Steel Per Fiat 52605/07	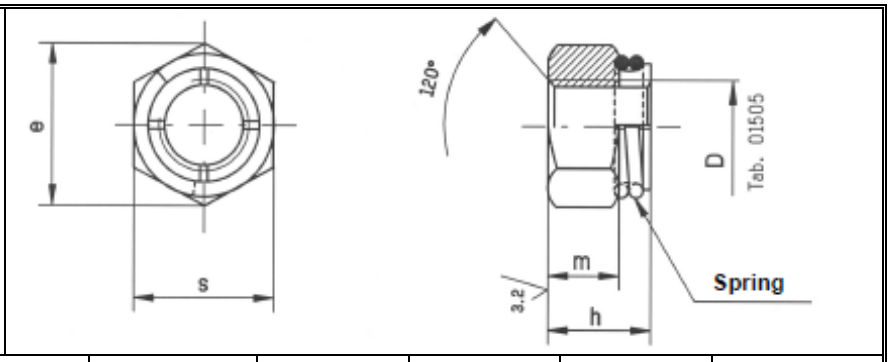

Part Number	dia	Pitch	s nom.	e min.	h max	m min.	Matl	Finish
47558017	8	1.25	13	14.38	10.6	6.3	SST	PLN

Fiat 10137 Hexagon Nuts Toothed Flanged	Material Fiat 52605/03 Non-Preferred	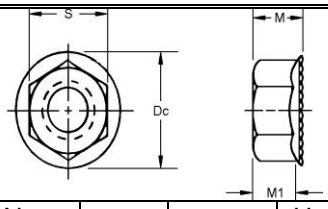

Part Number	Description	Nom Dia	Pitch	Height	Hex Flat	Flange Dia	Matl	Finish
13831801	NUT, FLANGE, TOOTHED M5 R40 ZND	5	0.8	4.3	8	11.2	R40	ZND
13832101	NUT, FLANGE, TOOTHED M6 R40 ZND	6	1.0	6.2	10	16.7	R40	ZND

Fiat 10139 Hexagon Collar Staking Nuts	Material Fiat 52605/01 8 (C40 NORM HB 164 – 215)	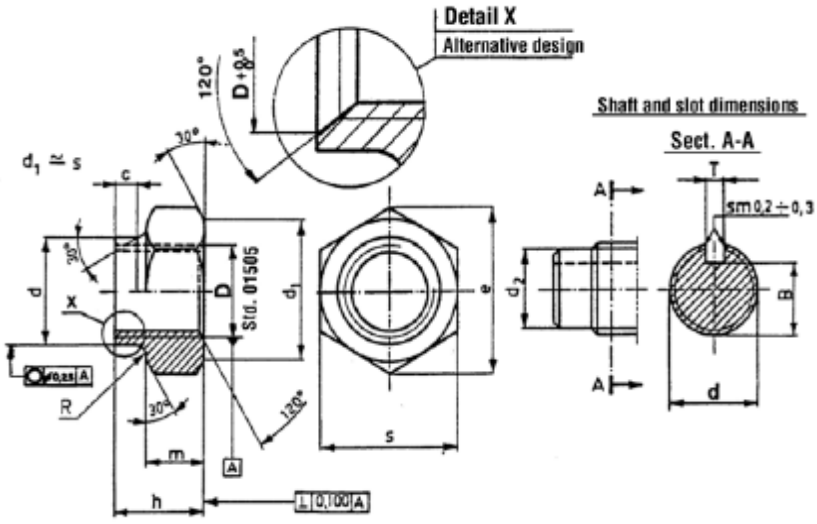

Part Number	Nom Dia	Pitch	s	h	m	c	d	B	Finish
14044271	M20	1.5	30	17	11	4	22.6	16.5	ZND
14044274	M20	1.5	30	17	11	4	22.6	16.5	DAC

Fiat 10142 Material Fiat R40
Wing nuts

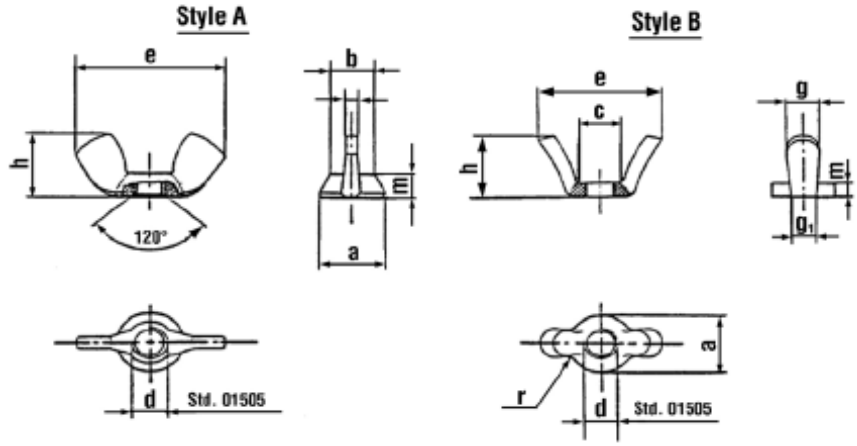

Part Number	Description	Nom Dia	Pitch	Height	Wing Spread	Matl	Finish
10102001	Nut, Wing M8 STL ZND	8	1.25	14.8	30.3	STL	ZND

Fiat 10145
Square Nuts

Material Fiat 52605/01 Non-Preferred

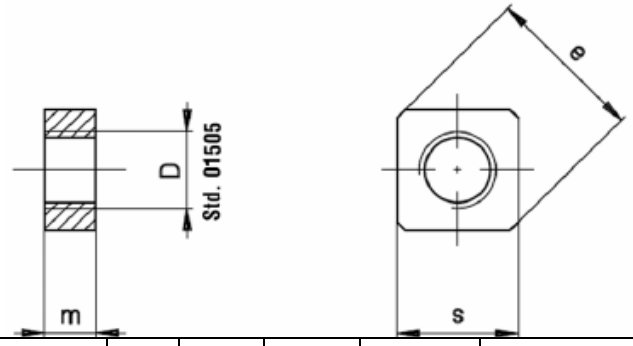

Part Number	Description	D	e	s	m	Mat	Fin
14089311	NUT,SQUARE M6 R50 ZNT	M6	13	10		R50	ZNT
14088511	NUT, SQUARE M10X1.25 R50 ZNT DIN	M10	22	17		R50	ZNT
14088711	NUT, SQUARE M12X1.25 R50 ZNT DIN	M12	25	19		R50	ZNT

Fiat 10145/01
Rectangular
Nuts
Steel – Per
Fiat 52605/01

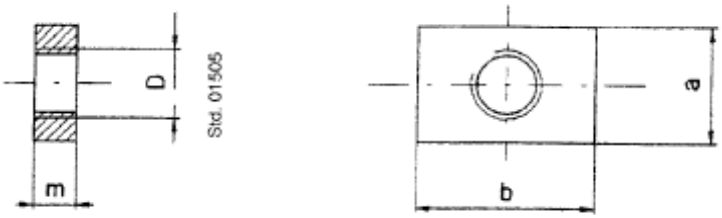

Part Number	**D**	**a**	**b**	**m**	**Mat**	**Fin**
12306511	M6	12	18	5	R50	ZND
12306611	M8	16	24	6	R50	ZND

Fiat 10146 Nuts with Metal Inserts for severe Application	Material Fiat 52605/01 & 52605/07	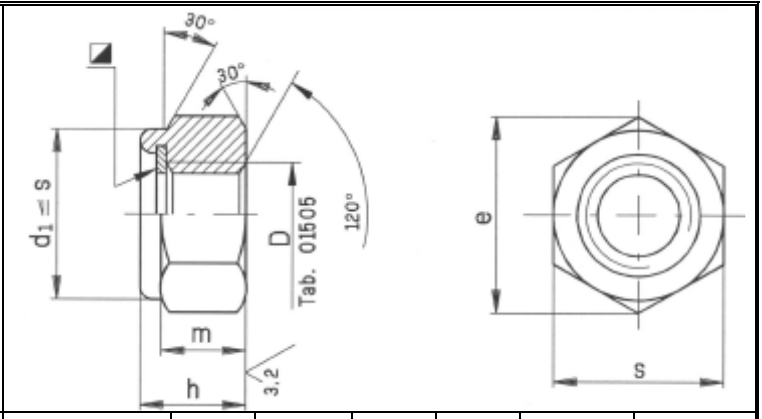

Part Number	Description	D	s	e	h	m	Mat	Fin
47665566	Nut, P/T Metal Insert M6 x 1	M6 x 1	10	11.05	6.2	3.7	8	ZND
47558836	Nut, P/T Metal Insert M8 x 1.25	M8 x 1.25	13	14.38	8.2	5.7	A2-70	PLN
47912527	Nut, P/T Metal Insert M10 x 1.25	M10 x 1.25	17	18.90	10.2	6.7	8	ZND
48168759	Nut, P/T Metal Insert M10 x 1.5	M10 x 1.5	17	18.90	10.2	6.7	A2-70	PLN
14076429	Nut, P/T Metal Insert M20 x 1.5	M20 x 1.5	30	32.95	20.2	13	10	Cop Plt

Fiat 10146/01 P/T W/Metal Insert Thin Nuts Material Fiat 52605/01 & 52605/07	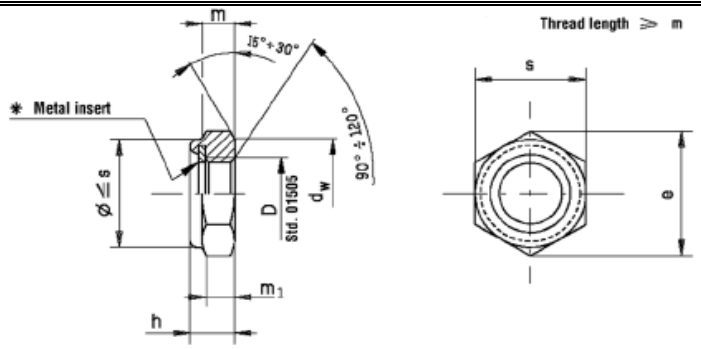

Part Number	D	s max.	e min.	h max.	m min.	m1 min.	dw min.	Mat	Fin
47619181	M6	10	11.05	4.4	2.6	2.32	8.9	04	ZND
47744609	M8	13	14.38	5.2	3.3	2.96	11.6	05	ZND
14137921	M10x1.25	16	17.77	6.6	4.3	3.76	14.6	05	ZND
14138011	M12x1.25	18	20.03	7.4	5.2	4.40	16.6	04	ZND
14138021	M12x1.25	18	20.03	7.4	5.2	4.40	16.6	05	ZND
47891151	M14x1.5	21	23.35	8.5	5.8	4.70	19.6	05	ZND

Fiat 10148
Self locking
Hex Nuts w/
captive
spring
washer

Material Fiat 52605/01 & 9.10187

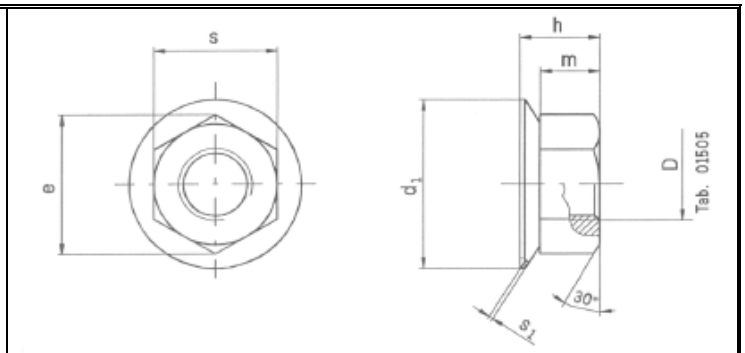

Part Number	Description	D	d1	S	e	h	m	Mat	Fin
14040611	Nut w/captive spng wshr M6	M6	14	10	11.05	7	5	STL	ZND

Fiat 10150
Prev Torq Hex
Two-Piece
Cap Nuts with
Polyamide
Insert

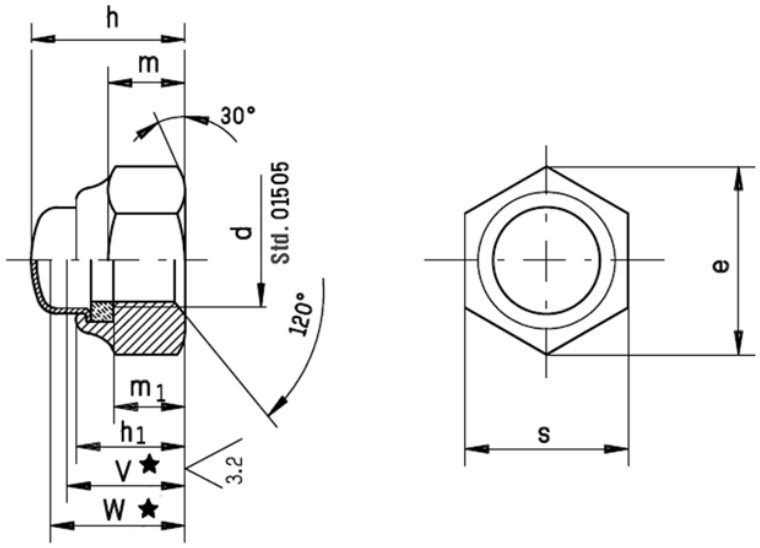

Part #	d (6H)	s min	s max	e min	h max	h_1 max	m min	m_1 min	V* min	W* max	Mat'l	Finish
47443402	M5	7.85	8	8.87	10.5	6.5	4	3.2	7.3	7.9	SST	BLO
14042277	M6	9.78	10	11.05	12	8	5	4	8.5	9.7	SST	BLO
14042411	M10X1.25	15.73	16	17.77	18.1	11.5	7.8	6.5	13.2	14.5	8	ZND

Fiat 10154 Piloted Square Nuts to be retained by cage or welding	Material Fiat 52605/02 Non-Preferred	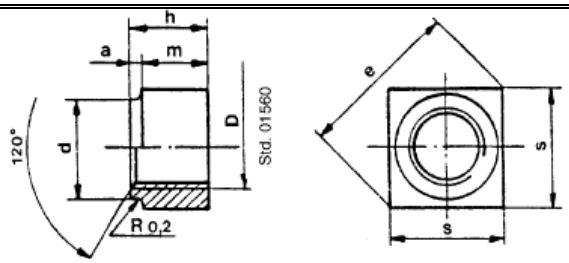						
Part Number	Description	D	e	s	a	h	m	d
14097100	Nut, Piloted Sq M4 R40 SD	M4	13.2	10	0.8	5.3	4.5	8
14073700	Nut, Piloted Sq M6 R40 SD	M6	13.2	10	0.8	5.8	5	8
14094800	Nut, Piloted Sq M6 R40 SD	M6	18.4	14	0.8	6.3	5.5	9
14094810	Nut, Piloted Sq M6 R50 SD	M6	18.4	14	0.8	6.3	5.5	9
14094900	Nut, Piloted Sq M8 R40 SD	M8	18.4	14	1.5	7.5	6	11
14094910	Nut, Piloted Sq M8 R50 SD	M8	18.4	14	1.5	7.5	6	11
14096100	Nut, Piloted Sq M8 R40 SD	M8	22.3	17	1.5	8.5	7	13
14097900	Nut, Piloted Sq M10X1.25 R40 SD	M10x1.25	22.3	17	1.5	8.5	7	13
14073310	Nut, Piloted Sq M10X1.25 R50 SD	M10x1.25	22.3	17	1.5	11	9.5	13
@91743678	Nut, Piloted Sq M10X1.25 R50 SD	M10x1.25	22.3	17	1.5	11	9.5	13
14095000	Nut, Piloted Sq M10 R40 SD	M10	22.3	17	1.5	8.5	7	13
14095010	Nut, Piloted Sq M10 R50 SD	M10	22.3	17	1.5	8.5	7	13
14096300	Nut, Piloted Sq M12X1.25 R40 SD	M12x1.25	25	19	2	10	8	15
14096310	Nut, Piloted Sq M12X1.25 R50 SD	M12x1.25	25	19	2	10	8	15
14073200	Nut, Piloted Sq M12X1.5 R40 SD	M12x1.5	25	19	2	10	8	15
14073910	Nut, Piloted Sq M12 R50 SD	M12	25	19	2	10	8	15
14075010	Nut, Piloted Sq M14 R50 SD	M14	25	19	2	10	8	17
14073400	Nut, Piloted Sq M14X1.5 R40 SD	M14X1.5	25	19	2	10	8	17
14073410	Nut, Piloted Sq M14X1.5 R50 SD	M14X1.5	25	19	2	10	8	17
14074910	Nut, Piloted Sq M16 R50 SD	M16	31.5	24	2	16	14	20
14073510	Nut, Piloted Sq M16x1.5 R50 SD	M16x1.5	31.5	24	2	16	14	20

@Zn-Ni – Zinc Nickel coating per Iveco 18-1103

Fiat 10163 Prevailing Torque Thin Hex Nuts for Projection Welding	Material Fiat 52605/02 Non-Preferred	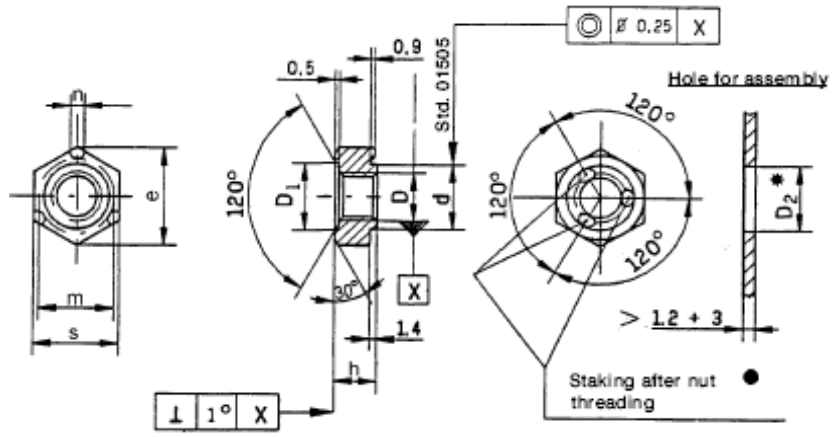

Part Number	Description	D	d	D2	D1	m	n	h	e	s	Mat	Fin
14091300	NUT, P/T WELD M6 R40 SD PLN	M6	8	8	8.5	10	2.2	6	14.38	13	R40 SD	PLN
14091410	NUT, P/T WELD M8 8 SD PLN	M8	11	11	11.5	14	3	7	18.90	17	8 SD	PLN
47912537	NUT, P/T WELD M10X1.25 8 SD PFL	M10X1.25	13	13	13.5	16	3	8	21.10	19	8 SD	PFL

Fiat 10165 Projection Weld Threaded Bushings	Material Fiat 52605/02 Non-Preferred Style A	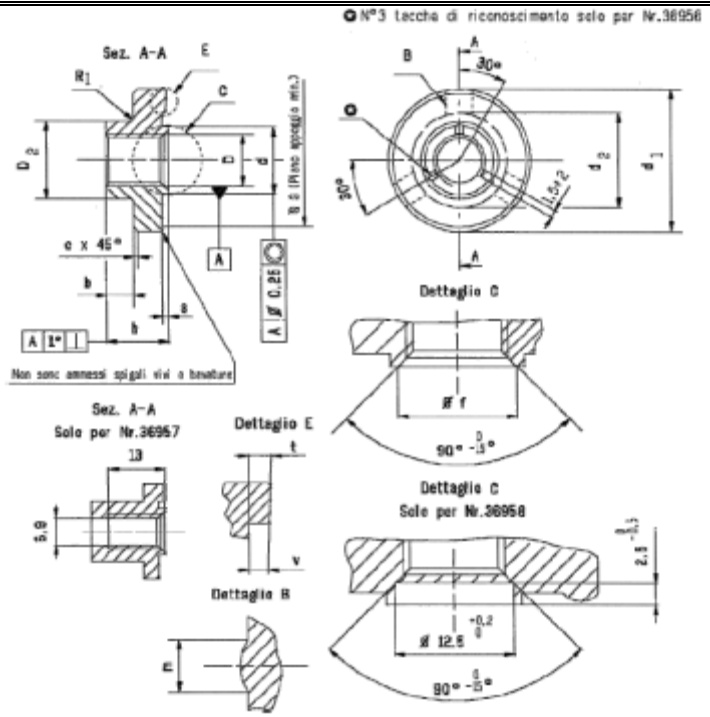

Part Number	Description	D	d1	f	D2	G	a	h	b	c	Mat	Fin
13695510	Bushing, proj weld	M8	22	9	14	20.5	1.4	10	5	0.5	STL	PLN
13696010	Bushing, proj weld	M10X1.25	24	11	16	22	1.0	12	5.5	1.0	STL	PLN

Fiat 10165 Projection Weld Threaded Bushings	Material Fiat 52605/02 Non-Preferred Style C	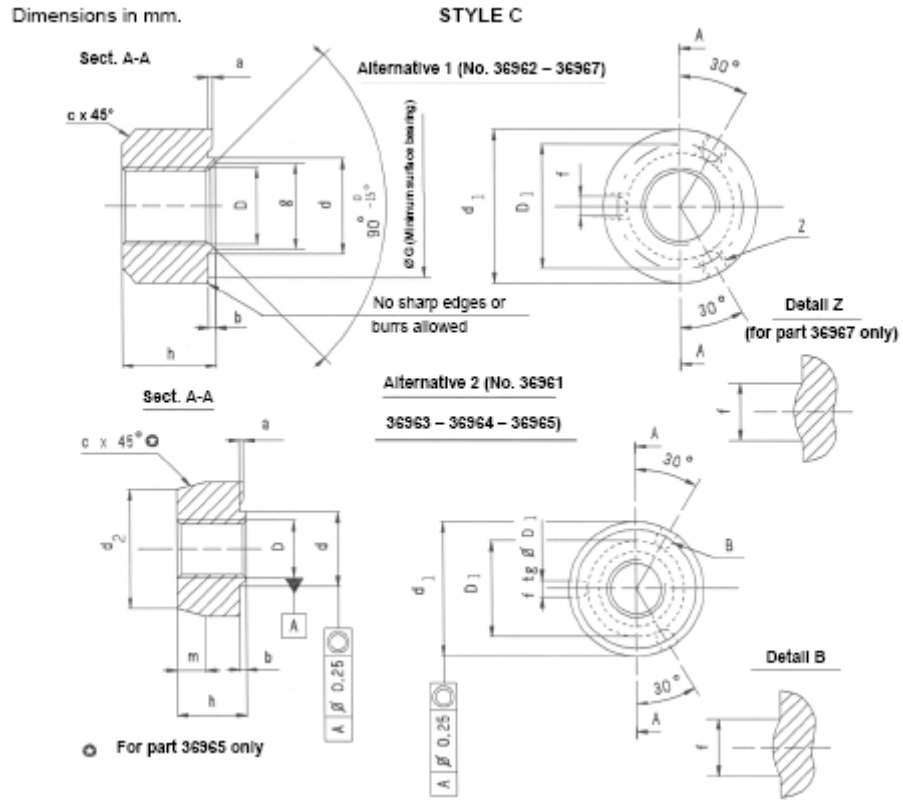

Part Number	Description	D	d1	f	D1	G	a	h	b	c	Mat	Fin
13696710	Bushing, pooj weld thrded	M6	16	4.5	10.5	14.8	0.6	6	1	1	STL	PLN

Fiat 10173	Machined washers	Dimensions in mm

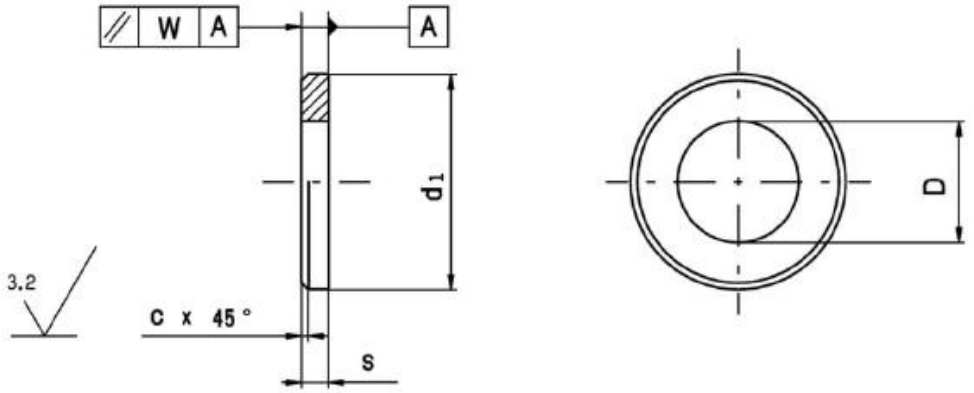

Part Number	Description	ID	OD	Thickness	Finish	Mat.
10730821	Washer,M14 x 26 x 3	14.4	26	3	ZND	R80
10732914	Washer, M20 x 38 x 4	20.75	38	4	DAC	R50
10730301	Washer, M8 x 17 x 2	8.15	17	2	ZND	R40
10730321	Washer, M8 x 17 x 2	8.15	17	2	ZND	R80
10730324	Washer, M8 x 17 x 2	8.15	17	2	DAC	R80
10731214	Washer, M22 x 38 x 4	22.4	38	4	DAC	R50

Fiat 10182 Lock Plates for Threaded Fasteners	Material Fiat 52652

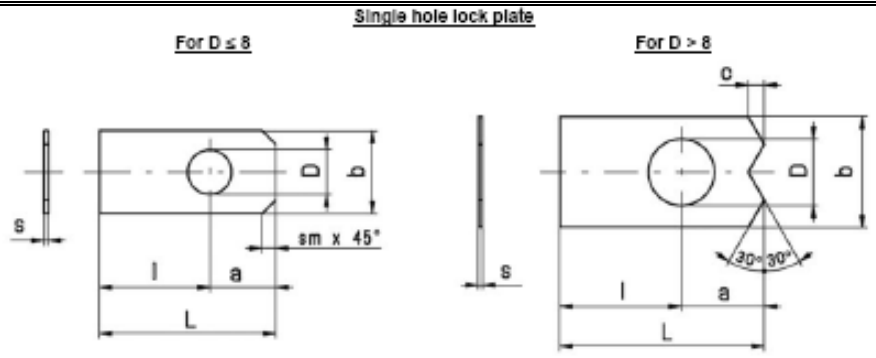

Part Number	Description	D	b	s	l	a	L	c	sm	mat	fin
14199000	Plate, M14	14.6	25	1.0	25	18	43	3.5		40PG	PLN
14198700	Plate, M8	8.3	15	0.8	20	12	32		2.5	40PG	PLN
14199100	Plate, M16	16.6	25	1.0	30	20	50	3.5		40PG	PLN
14198901	Plate, M12	12.4	20	0.8	22	15	37	3.0		40PG	ZND
14198910	Plate, M12	12.4	20	0.8	22	15	37	3.0		60PG	PLN
14198810	Plate, M10	10.4	20	0.8	20	13	33	3.0		60PG	PLN
14199110	Plate, M16	16.6	25	1.0	30	20	50	3.5		60PG	PLN
		Fiat 10182 continues below									

Fiat 10182 Tab Washers	Material Fiat 52652	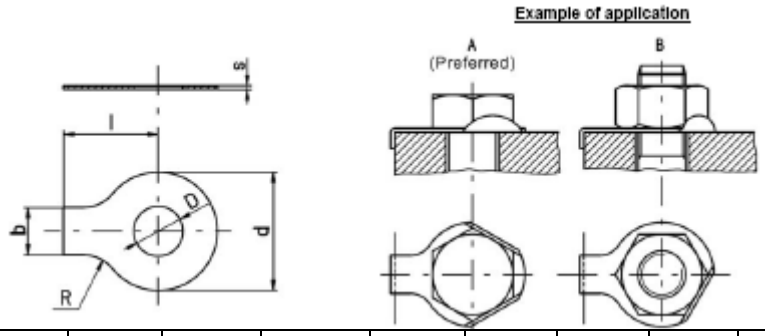									
Part Number	Description	D	d	s	l	b	R			mat	fin
10053710	Washer, Tab M12	12	28	0.8	22	10	10			60PG	PLN
10053921	Washer, Tab M16	17	38	1	30	15	10				ZND

Fiat 10214 Medium-Length Tap End Studs
Fiat 10219 Long Tap End Studs
Fiat 10227 Extra long tap End Studs

Material: ISO 898/1

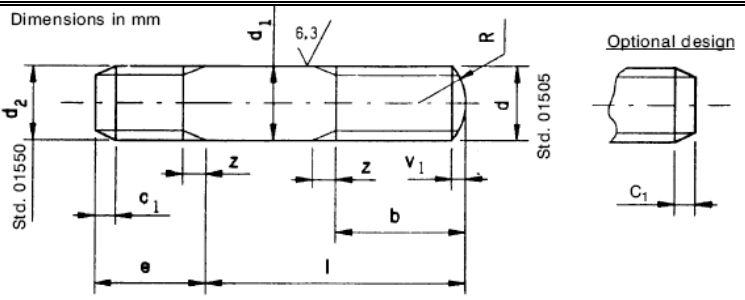

Part Number	Description	Dia Nom d, d2	Pitch	Length. l	Length. e	Thread Length. b	Matl	Finish
11001221	STUD, M5X18X7	5	0.8	18	7	15	8.8	ZND
11500024	STUD, M6X12X9	6	1	12	9	9	8.8	DAC
11500124	STUD, M6X14X9	6	1	14	9	11	8.8	DAC
11500321	STUD, M6X18X9	6	1	18	9	15	8.8	ZND
11500421	STUD, M6X20X9	6	1	20	9	17	8.8	ZND
11500520	STUD, M6X22X9	6	1	22	9	18	8.8	PLN
11500624	STUD, M6X25X9	6	1	25	9	18	8.8	DAC
11500821	STUD, M6X30X9	6	1	30	9	18	8.8	ZND
87393403	STUD, M6X35X9	6	1	35	9	18	8.8	ZND
11501224	STUD, M6X40X9	6	1	40	9	18	8.8	DAC
92779523	STUD, M6X45X9	6	1	45	9	18	8.8	ZND
13540921	STUD, M6X16X12	6	1	16	12	14	8.8	ZND
92779525	STUD, M6X45X12	6	1	45	12	18	8.8	ZND
47942676	STUD, M6X50X12	6	1	50	12	18	8.8	ZND
91776689	STUD, M6X70X12	6	1	70	12	18	8.8	ZND
13516620	STUD, M8 X 12 X 16	8	1.25	16	12	13	8.8	PLN
13516621	STUD, M8 X 12 X16	8	1.25	16	12	13	8.8	ZND
13516624	STUD, M8 X 12 X 16	8	1.25	16	12	13	8.8	DAC
12429424	STUD, M8 X 20 X 20	8	1.25	20	20	17	8.8	DAC
13516821	STUD, M8 X 12 X 20	8	1.25	20	12	17	8.8	ZND
13516921	STUD, M8 X 12 X 22	8	1.25	22	12	19	8.8	ZND
13516924	STUD, M8 X 12 X 22	8	1.25	22	12	19	8.8	DAC
13516930	STUD, M8 X 12 X 22	8	1.25	22	12	19	10.9	PLN
47485494	STUD, M8 X 12 X 22	8	1.25	22	12	19	10.9	DAC
13517010	STUD, M8 X 12 X 25	8	1.25	25	12	22	5.8	PLN
13517020	STUD, M8 X 12 X 25	8	1.25	25	12	22	8.8	PLN
13517021	STUD, M8 X 12 X 25	8	1.25	25	12	22	8.8	ZND
13517030	STUD, M8 X 12 X 25	8	1.25	25	12	22	10.9	PLN
90399801	STUD, M8 X 12 X 25	8	1.25	25	12	22	A2-70	PLN
13517110	STUD, M8 X 12 X 28	8	1.25	28	12	22	5.8	PLN
13517111	STUD, M8 X 12 X 28	8	1.25	28	12	22	5.8	ZND
92207488	STUD, M8 X 12 X 28	8	1.25	28	12	22	8.8	ZND
13517124	STUD, M8 X 12 X 28	8	1.25	28	12	22	8.8	DAC
13517210	STUD, M8 X 12 X 30	8	1.25	30	12	22	5.8	PLN
13517220	STUD, M8 X 12 X 30	8	1.25	30	12	22	8.8	PLN
13517221	STUD, M8 X 12 X 30	8	1.25	30	12	22	8.8	ZND
13517224	STUD, M8 X 12 X 30	8	1.25	30	12	22	8.8	DAC
13517320	STUD, M8 X 12 X 35	8	1.25	35	12	22	8.8	PLN
92135216	STUD, M8 X 12 X 35	8	1.25	35	12	22	8.8	BGM

Fiat 10214 , Fiat 10219, Fiat 10227 Continued from Previous page								
Part Number	Description	Dia Nom d, d2	Pitch	Length. l	Length. e	Thread Length. b	Matl	Finish
13517324	STUD, M8 X 12 X 35	8	1.25	35	12	22	8.8	DAC
92761845	STUD, M8 X 12 X 40	8	1.25	40	12	22	8.8	BGM
13517521	STUD, M8 X 12 X 45	8	1.25	45	12	22	8.8	ZND
13517620	STUD, M8 X 12 X 50	8	1.25	50	12	22	8.8	PLN
13517624	STUD, M8 X 12 X 50	8	1.25	50	12	22	8.8	DAC
13517821	STUD, M8 X 12 X 60	8	1.25	60	12	22	8.8	ZND
13518021	STUD, M8 X 12 X 70	8	1.25	70	12	22	8.8	ZND
13543624	STUD, M8 X 16 X 30	8	1.25	30	16	22	8.8	DAC
92665082	STUD, M8 X 16 X 35	8	1.25	35	16	22	8.8	ZND
92668491	STUD, M8 X 16 X 45	8	1.25	45	16	22	10.9	DAC
92662530	STUD, M8 X 16 X 45	8	1.25	45	16	22	8.8	ZND
13544120	STUD, M8 X 16 X 55	8	1.25	55	16	22	8.8	PLN
47547595	STUD, M8 X 16 X 55	8	1.25	55	16	22	8.8	ZND
13544220	STUD, M8 X 16 X 60	8	1.25	60	16	22	8.8	PLN
92743832	STUD, M8 X 16 X 60	8	1.25	60	16	22	8.8	ZND
13544320	STUD, M8 X 16 X 65	8	1.25	65	16	22	8.8	PLN
13970421	STUD, M8 X 16 X 90	8	1.25	90	16	22	8.8	ZND
13970520	STUD, M8 X 16 X 95	8	1.25	95	16	22	8.8	PLN
13970521	STUD, M8 X 16 X 95	8	1.25	95	16	22	8.8	ZND
13449111	STUD, M10X1.25X 16	10	1.25	16	15	13	5.8	ZND
13449130	STUD, M10X1.25X 16	10	1.25	16	15	13	10.9	PLN
13449311	STUD, M10X1.25X 20	10	1.25	20	15	17	5.8	ZND
91790016	STUD, M10X1.25X 20	10	1.25	20	15	17	8.8	ZND
#91873503	STUD, M10X1.5X 20	10	1.5	20	15	17	8.8	ZND
13449421	STUD, M10X1.25X 22	10	1.25	22	15	19	8.8	ZND
13449521	STUD, M10X1.25X 25	10	1.25	25	15	22	8.8	ZND
13449720	STUD, M10X1.25X 30	10	1.25	30	15	26	8.8	PLN
13449721	STUD, M10X1.25X 30	10	1.25	30	15	26	8.8	ZND
13449724	STUD, M10X1.25X 30	10	1.25	30	15	26	8.8	DAC
87517050	STUD, M10X1.25X 32	10	1.25	32	15	26	8.8	ZND
13454034	STUD, M10X1.25 X 45	10	1.25	45	25	26	10.9	DAC
13450021	STUD, M10X1.25 X 45	10	1.25	45	15	26	8.8	ZND
87517051	STUD, M10X1.25 X 47	10	1.25	47	15	26	8.8	ZND
47754202	STUD, M1X01.25 X 50	10	1.25	50	15	26	8.8	PLN
13450221	STUD, M10X1.25 X 55	10	1.25	55	15	26	5.8	DAC
47754205	STUD, M10X1.25 X 55	10	1.25	55	15	26	8.8	PLN
13450230	STUD, M10X1.25 X 55	10	1.25	55	15	26	10.9	PLN
47894135	STUD, M10X1.25 X 58	10	1.25	58	15	26	8.8	PLN
#48195385	STUD, M10X1.5 X 58	10	1.5	58	15	26	8.8	PLN
47929108	STUD, M10X1.25 X 60	10	1.25	60	15	26	8.8	PLN
13450434	STUD, M10X1.25 X 65	10	1.25	65	15	26	10.9	DAC
13451721	STUD, M10X1.25 X 130	10	1.25	130	15	26	8.8	ZND
91801045	STUD, M10X1.25 X 35	10	1.25	35	20	26	8.8	ZND
13546834	STUD, M10X1.25 X 45	10	1.25	45	20	26	10.9	DAC
51594410	STUD, M10X1.25 X 50	10	1.25	50	20	26	10.9	DAC
13530021	STUD, M12X1.25 X 25	12	1.25	25	18	22	8.8	ZND
# part number not supported by but based on Fiat 10214								

Fiat 10214 , Fiat 10219, Fiat 10227 Continued from Previous page

Part Number	Description	Dia Nom d, d2	Pitch	Length. l	Length. e	Thread Length. b	Matl	Finish
13530120	STUD, M12X1.25 X 30	12	1.25	30	18	27	8.8	PLN
13530220	STUD, M12X1.25 X 35	12	1.25	35	18	30	8.8	PLN
13552634	STUD, M12X1.25 X 40	12	1.25	40	24	30	10.9	DAC
13530434	STUD, M12X1.25 X 45	12	1.25	45	18	30	10.9	DAC
90392739	STUD, M12X1.25 X 55	12	1.25	55	18	30	10.9	DAC
51568795	STUD, M12X1.25X60	12	1.25	60	24	30	10.9	DAC
47550308	STUD, M12X1.25X70	12	1.25	70	24	30	10.9	DAC
47550323	STUD, M12X1.25X75	12	1.25	75	24	30	10.9	DAC
13553434	STUD, M12X1.25X80	12	1.25	80	24	30	10.9	DAC
13972321	STUD, M12X1.25 X 100	12	1.25	100	24	30	8.8	ZND
13972324	STUD, M12X1.25 X 100	12	1.25	100	24	30	8.8	DAC
13972334	STUD, M12X1.25 X 100	12	1.25	100	24	30	10.9	DAC
13972434	STUD, M12X1.25 X 105	12	1.25	105	24	30	10.9	DAC
13972531	STUD, M12X1.25 X 110	12	1.25	110	24	30	10.9	ZND
13954520	STUD, M12X1.25 X 110	12	1.25	110	18	30	8.8	PLN
13531634	STUD, M12X1.25 X 130	12	1.25	130	18	36	10.9	DAC
13554431	STUD, M12X1.25 X 130	12	1.25	130	24	36	10.9	ZND
13531720	STUD, M12X1.25 X 140	12	1.25	140	18	36	8.8	PLN
13554731	STUD, M12X1.25 X 145	12	1.25	145	24	36	10.9	ZND
#47411282	STUD, M12X1.75 X 100	12	1.75	100	24	30	8.8	ZND
#47638847	STUD, M12X1.75 X 125	12	1.75	125	24	30	10.9	ZND
47774507	STUD, M14X1.5X35	14	1.5	35	20	32	8.8	ZND
11797520	STUD, M14X1.5X40	14	1.5	40	20	34	8.8	PLN
11797530	STUD, M14X1.5X40	14	1.5	40	20	34	10.9	PLN
11797534	STUD, M14X1.5X40	14	1.5	40	20	34	10.9	DAC
11797734	STUD, M14X1.5X50	14	1.5	50	20	34	10.9	DAC
13555334	STUD, M14X1.5X28X28	14	1.5	28	28	25	10.9	DAC
13555520	STUD, M14X1.5X35X28	14	1.5	35	28	34	8.8	PLN
13555521	STUD, M14X1.5X35X28	14	1.5	35	28	34	8.8	ZND
13555534	STUD, M14X1.5X35X28	14	1.5	35	28	34	10.9	DAC
13555630	STUD, M14X1.5X40X28	14	1.5	40	28	34	10.9	PLN
13555734	STUD, M14X1.5X45X28	14	1.5	45	28	34	10.9	DAC
13975834	STUD, M14X1.5X95	14	1.5	95	28	34	10.9	DAC
13975930	STUD, M14X1.5X100	14	1.5	100	28	34	10.9	PLN
13975934	STUD, M14X1.5X100	14	1.5	100	28	34	10.9	DAC
13976034	STUD, M14X1.5X105	14	1.5	105	28	34	10.9	DAC
13976130	STUD, M14X1.5X110	14	1.5	110	28	34	10.9	PLN
13976134	STUD, M14X1.5X110	14	1.5	110	28	34	10.9	DAC
13976230	STUD, M14X1.5X115	14	1.5	115	28	34	10.9	PLN
13976234	STUD, M14X1.5X115	14	1.5	115	28	34	10.9	DAC
13976334	STUD, M14X1.5X120	14	1.5	120	28	34	10.9	DAC
13976434	STUD, M14X1.5X125	14	1.5	125	28	34	10.9	DAC
13557430	STUD, M14X1.5X130	14	1.5	130	28	40	10.9	PLN
47614154	STUD, M14X1.5X135	14	1.5	135	28	40	10.9	PLN
13557730	STUD, M14X1.5X145	14	1.5	145	28	40	10.9	PLN

part number not supported by but based on Fiat 10219

Fiat 10214 , Fiat 10219, Fiat 10227 Continued from Previous page								
Part Number	Description	Dia Nom d, d2	Pitch	Length. l	Length. e	Thread Length. b	Matl	Finish
13557830	STUD, M14X1.5X150	14	1.5	150	28	40	10.9	PLN
13558130	STUD, M14X1.5X155	14	1.5	155	28	40	10.9	PLN
13557930	STUD, M14X1.5X160	14	1.5	160	28	40	10.9	PLN
13558430	STUD, M14X1.5X170	14	1.5	170	28	40	10.9	PLN
11800421	STUD, M16X1.5X35	16	1.5	35	22	32	8.8	ZND
11800624	STUD, M16X1.5X45	16	1.5	45	22	38	8.8	DAC
11801034	STUD, M16X1.5X65	16	1.5	65	22	38	10.9	DAC
13954921	STUD, M16X1.5X85	16	1.5	85	22	38	8.8	ZND
48192445	STUD, M16X1.5X40	16	1.5	40	32	38	10.9	DAC
13561634	STUD, M16X1.5X45	16	1.5	45	32	38	10.9	DAC
90505208	STUD, M16X1.5X60	16	1.5	60	32	38	10.9	DAC
48027021	STUD, M16X1.5X65	16	1.5	65	32	38	10.9	DAC
92141014	STUD, M16X1.5X65	16	1.5	65	32	38	10.9	PLN
90445014	STUD, M16X1.5X85	16	1.5	85	32	38	10.9	DAC
13973034	STUD, M16X1.5X90	16	1.5	90	32	38	10.9	DAC
90391147	STUD, M16X1.5X95	16	1.5	95	32	38	10.9	DAC
13973330	STUD, M16X1.5X105	16	1.5	105	32	38	10.9	PLN
13973430	STUD, M16X1.5X110	16	1.5	110	32	38	10.9	PLN
13973534	STUD, M16X1.5X115	16	1.5	115	32	38	10.9	DAC
13973630	STUD, M16X1.5X120	16	1.5	120	32	38	10.9	PLN
13973730	STUD, M16X1.5X125	16	1.5	125	32	38	10.9	PLN
13563330	STUD, M16X1.5X130	16	1.5	130	32	44	10.9	PLN
51464610	STUD, M16X1.5X135	16	1.5	135	32	44	10.9	PLN
92207335	STUD, M16X1.5X150	16	1.5	150	32	44	10.9	PLN
47520589	STUD, M16X1.5X160	16	1.5	160	32	44	10.9	PLN
92207336	STUD, M16X1.5X170	16	1.5	170	32	44	10.9	PLN
13564030	STUD, M16X1.5X180	16	1.5	180	32	44	10.9	PLN
11803824	STUD, M18X1.5X55	18	1.5	55	25	42	8.8	DAC
90470953	STUD, M18X1.5X55	18	1.5	55	25	42	8.8	@Zn-Ni
92775107	STUD, M18X1.5X55	18	1.5	55	25	42	10.9	ZN-NI-1
92251771	STUD, M18X1.5X25X60	18	1.5	60	25	42	10.9	ZND
47490934	STUD, M18X1.5X60	18	1.5	60	36	42	8.8	DAC
51634701	STUD, M18X1.5X60	18	1.5	60	36	42	10.9	DAC
92744778	STUD, M18X1.5X65	18	1.5	65	25	42	8.8	ZN-NI-1
47543628	STUD, M18X1.5X65	18	1.5	65	45	42	8.8	DAC
92247810	STUD, M18X1.5X65	18	1.5	65	45	42	10.9	DAC
90470971	STUD, M18X1.5X65	18	1.5	65	45	42	8.8	@Zn-Ni
51609085	STUD, M18X1.5X75	18	1.5	75	25	42	10.9	DAC
51622558	STUD, M18X1.5X75	18	1.5	75	32	42	10.9	DAC
51609098	STUD, M18X1.5X90	18	1.5	90	25	42	10.9	DAC
51622557	STUD, M18X1.5X90	18	1.5	90	45	42	10.9	DAC
47507259	STUD, M18X1.5X100	18	1.5	100	45	42	10.9	DAC
13976934	STUD, M18X1.5X105	18	1.5	105	36	42	10.9	DAC
47467525	STUD, M18X1.5X120	18	1.5	120	45	42	10.9	DAC
13955934	STUD, M20X1.5X90	20	1.5	90	28	46	10.9	DAC
47893589	STUD, M20X1.5X95	20	1.5	95	28	46	10.9	DAC
@Zn-Ni – Zinc Nickel coating per Iveco 18-1103; ZN-NI-1 per STPA020								

Fiat 10214 , Fiat 10219, Fiat 10227 Continued from Previous page								
Part Number	Description	Dia Nom d, d2	Pitch	Length. l	Length. e	Thread Length. b	Matl	Finish
47896034	STUD, M20X1.5X95	20	1.5	95	40	46	10.9	DAC
47617363	STUD, M20X1.5X105	20	1.5	105	28	46	10.9	DAC
47590057	STUD, M20X1.5X105	20	1.5	105	40	46	10.9	DAC
13974434	STUD, M20X1.5X115	20	1.5	115	40	46	10.9	DAC
92149348	STUD, M20X1.5X140	20	1.5	140	40	52	10.9	BGM
92149349	STUD, M20X1.5X145	20	1.5	145	40	52	10.9	BGM
11808834	STUD, M20X1.5X150	20	1.5	150	28	52	10.9	DAC
#84561116	STUD, M20X1.5X155	20	1.5	155	28	52	10.9	DAC
91902897	STUD, M20X1.5X165	20	1.5	165	40	52	10.9	DAC
47519236	STUD, M20X1.5X200	20	1.5	200	50	52	10.9	DAC
# part number not supported by but based on Fiat 10214								

Fiat 10232
Double End Studs

Material: Steel 52605/01

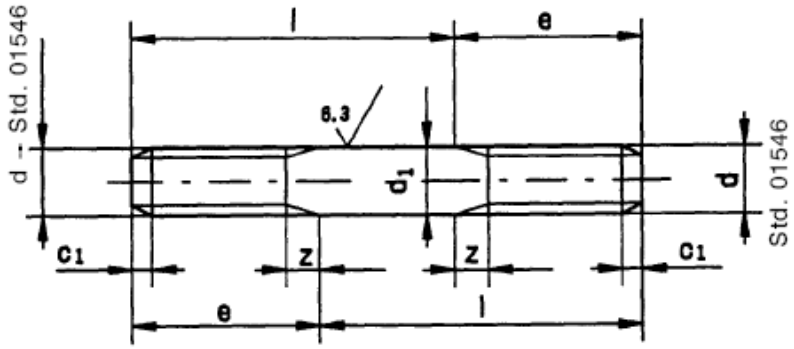

Part Number	Description	Dia Nom.	Pitch	Length .l	Stud length .e	Thread Length	Z	C1	Matl	Finish
13591411	Stud, M10x1.25 x 20x40	M10	1.25	40	20	14.7	3.1	2.2	5.8	ZND
*47762246	Stud, M10x1.25 x 20x70	M10	1.25	70	20	14.7	3.1	2.2	5.8	ZND

* Part # not in Fiat 10232 but based on Fiat 10232

Iveco 11-0152 Double End Studs - Medium Root (Metal Side)

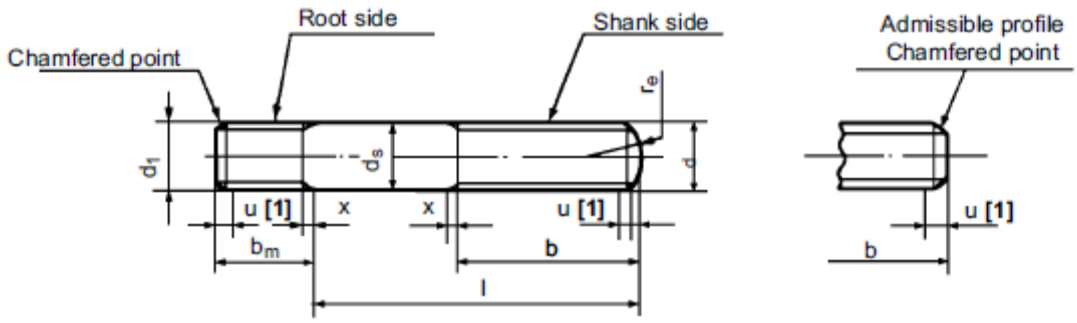

[1] Incomplete thread length.

TABLE I - Basic dimensions

Thread d (6g) / d_1 (2m/6g)		M5	M6	M8	M10	M12	M14	M16	M20	M24
Pitch	P	0,8	1	1,25	1,5	1,75	2	2	2,5	3
b^{+2P}_{0}	l ≤ 120	16	18	22	26	30	34	38	46	54
	120 < l ≤ 200	-	-	-	-	36	40	44	52	60
	l > 200	-	-	-	-	-	-	-	-	73
d_s	nominal	5,00	6,00	8,00	10,00	12,00	14,00	16,00	20,00	24,00
	deviation (h13)	0 / - 0,18		0 / - 0,22		0 / - 0,27			0 / - 0,33	
b_m	nominal	7	9	12	15	18	20	22	28	32
	Deviation (j_s16)	± 0,45		± 0,55			± 0,65			± 0,80
r_e	≈	7	8,4	11,2	14	16,8	19,6	22,4	28	33,6
u	(2 P) max.	1.6	2,0	2,5	3,0	3,5	4,0	4,0	5,0	6,0
x	(2.5 P) max.	2	2,5	3,1	3,8	4,4	5,0	5,0	6,2	7,5

Part Number	Dia Nom.	Pitch	Length l	b_m	Thread Length b (approx.)	Mat'l	Finish
16731270	M10	1.5	25	15	18.2	A2-70	PLN
16731370	M10	1.5	30	15	23.2	A2-70	PLN

Iveco 11-0156 Double End Studs - Long Root (Metal Side)

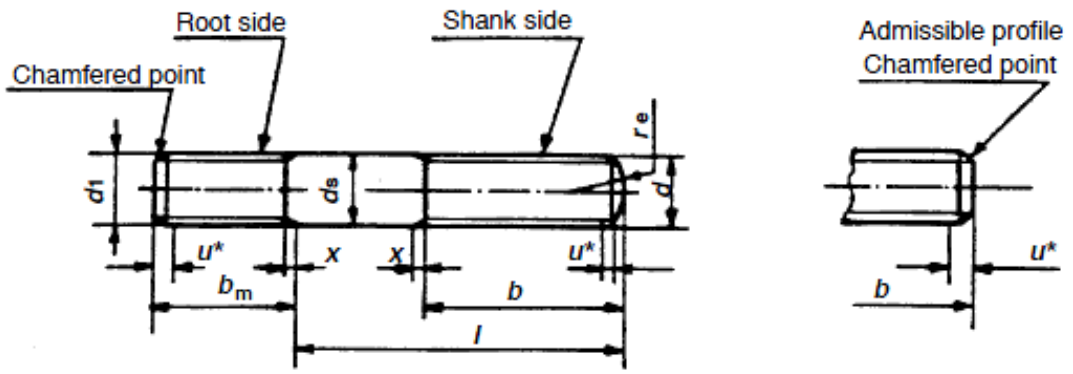

TABLE I – Basic dimensions

Thread d		(6g)	M5	M6	M8	M10	M12	M14	M16	M20	M24
	d_1	(2m/6g)									
Pitch	P		0.8	1	1.25	1.5	1.75	2	2	2.5	3
b^{+2P}_{0}		$l \leq 120$	16	18	22	26	30	34	38	46	54
	$120 <$	$l \leq 200$	–	–	–	–	36	40	44	52	60
		$l > 200$	–	–	–	–	–	–	–	–	73
d_s	nominal		5.00	6.00	8.00	10.00	12.00	14.00	16.00	20.00	24.00
	deviation (h13)		0 −0.18		0 −0.22		0 −0.27			0 −0.33	
b_m	nominal		10	12	16	20	24	28	32	40	48
	deviation (j_s16)		± 0.55			± 0.65			± 0.80		
r_e		approx.	7	8.4	11.2	14	16.8	19.6	22.4	28	33.6
u	(2 P)	max.	1.6	2.0	2.5	3.0	3.5	4.0	4.0	5.0	6.0
x	(2.5 P)	max.	2	2.5	3.1	3.8	4.4	5.0	5.0	6.2	7.5

* Length of incomplete thread.

Part Number	Dia Nom.	Pitch	Length l	b_m	Thread Length b	Mat'l	Finish
16748734	M10	1.5	35	20	26	10.9	GEO 321-5

Fiat 10252
Helical Screw Thread Inserts – Regular and Screw Lock

Material: X15 CN 1808 per Fiat 52778

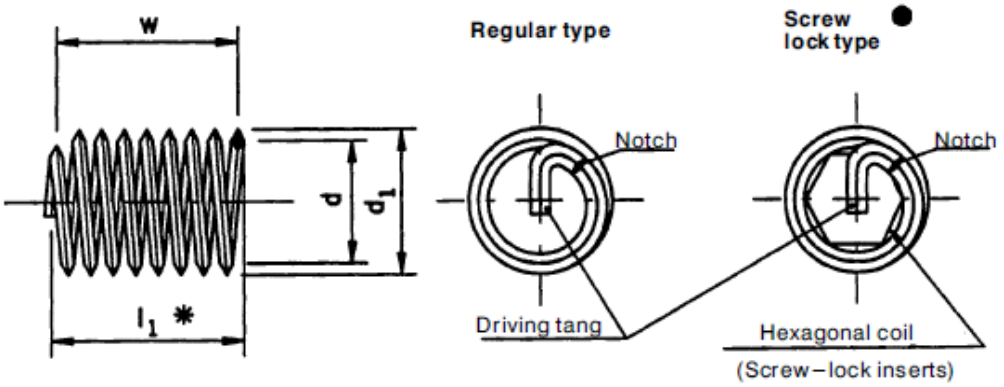

Part Number	d	d_1		W Min.	l_1	Type	Material	Finish
		min	max					
13525770	M8	9.85	10.10	8.2	12	Regular	SST	PLN

Fiat 10312/02 Non-Preferred ISO Thread Grade A Steel --- 52605/01

Dimensions in mm

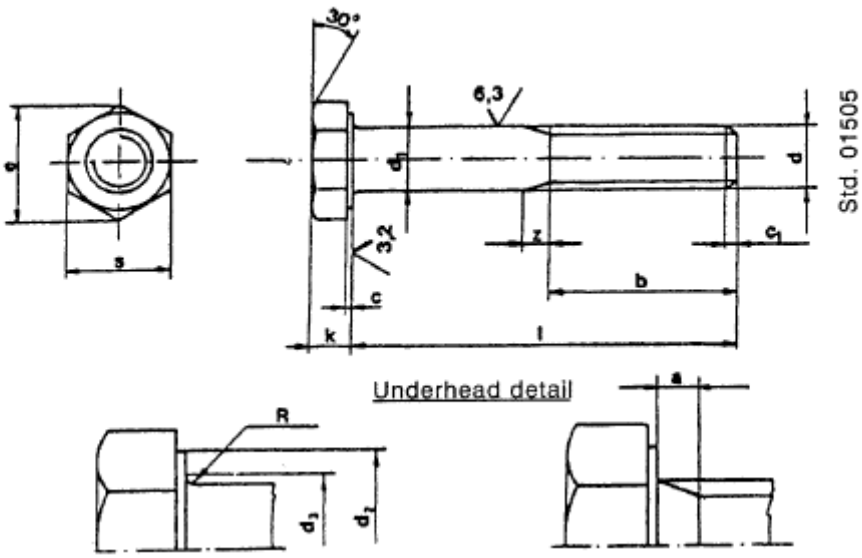

Part Number	Dia	Pitch	l	s	k	b	Matl	Finish
48125962	12	1.5	130	19	8	36	10.9	DAC

Fiat 10312/03 Non-Preferred Hexagon Bolts for Severe Applications

Dimensions in mm

THREAD ROLLED AFTER HARDENING AND TEMPERING

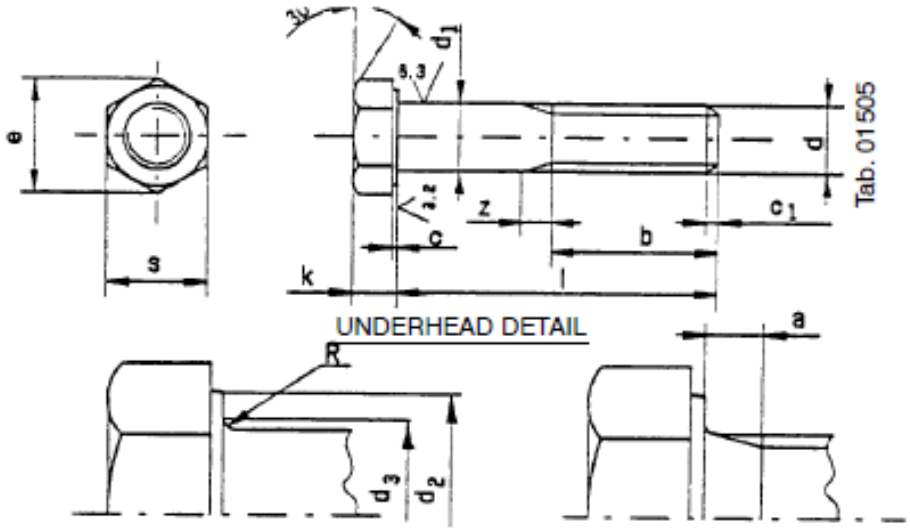

Part Number	Dia	Pitch	l	s	k	b	Matl	Finish
16233921	8	1.25	90	13	5.5	22	8.8	ZND
16233930	8	1.25	90	13	5.5	22	10.9	PLN

Fiat 10312/04
DIN Head
Dimensions
Non-Preferred

Material Fiat 52605/03 Non-Preferred
Thread Rolled before hardening and tempering

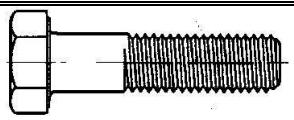
Bolt with shank

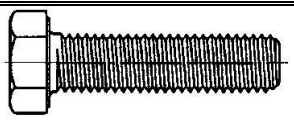
Bolt fully threaded

Part Number	Description	Dia	Pitch	Length		Thread Length	Matl	Finish
16202224	BOLT, M8 X 130 8.8 DAC	8	1.25	130			8.8	DAC
16204230	BOLT, M10 X 1.25 X 20 10.9 PLN	10	1.25	20		FULL	10.9	PLN
16204321	BOLT, M10 X 1.25 X 25 8.8 ZND	10	1.25	25			8.8	ZND
16204430	BOLT, M10 X 1.25 X 30 10.9 PLN	10	1.25	30		FULL	10.9	PLN
16204524	BOLT, M10 X 1.25 X 35 8.8 DAC	10	1.25	35		26	8.8	DAC
16206024	BOLT, M10 X 1.25 X 140 8.8 DAC	10	1.25	140		32	8.8	DAC
16207524	BOLT, M12 X 1.25 X 20 8.8 DAC	12	1.25	20		FULL	8.8	DAC
16208034	BOLT, M12 X 1.25 X 45 10.9 DAC	12	1.25	45			10.9	DAC
16208334	BOLT, M12 X 1.25 X 60 10.9 DAC	12	1.25	60			10.9	DAC
16208430	BOLT, M12 X 1.25 X 65 10.9 PLN	12	1.25	65			10.9	PLN
16214334	BOLT, M14 X 1.5 X 35 10.9 DAC	14	1.5	35		FULL	10.9	DAC
16214424	BOLT, M14 X 1.5 X 40 8.8 DAC	14	1.5	40			8.8	DAC
16214524	BOLT, M14 X 1.5 X 45 8.8 DAC	14	1.5	45			8.8	DAC
16214624	BOLT, M14 X 1.5 X 50 8.8 DAC	14	1.5	50			8.8	DAC
16214930	BOLT, M14 X 1.5 X 65 10.9 PLN	14	1.5	65			10.9	PLN
16215021	BOLT, M14 X 1.5 X 70 8.8 ZND	14	1.5	70			8.8	ZND
16215324	BOLT, M14 X 1.5 X 90 8.8 DAC	14	1.5	90			8.8	DAC
16217734	BOLT, M16 X 1.5 X 50 10.9 DAC	16	1.5	50		FULL	10.9	DAC
16217834	BOLT, M16 X 1.5 X 55 10.9 DAC	16	1.5	55			10.9	DAC
16218074	BOLT, M16 X 1.5 X 65 12.9 DAC	16	1.5	65			12.9	DAC
16218474	BOLT, M16 X 1.5 X 90 12.9 DAC	16	1.5	90			12.9	DAC
16218574	BOLT, M16 X 1.5 X 100 12.9 DAC	16	1.5	100			12.9	DAC
16220874	BOLT, M18 X 1.5 X 45 12.9 DAC	18	1.5	45			12.9	DAC
90375354##	BOLT, M18 X 1.5 X 45 12.9 DAC	18	1.5	45			12.9	BGM
16220934	BOLT, M18 X 1.5 X 50 10.9 DAC	18	1.5	50			10.9	DAC
84591617##	BOLT, M18 X 1.5 X 65 12.9 DAC	18	1.5	65			12.9	DAC

##NON-FIAT PART NUMBER TO BE SUPPLIED PER FIAT 10312/04

Fiat 10412

Square Headed Bolts

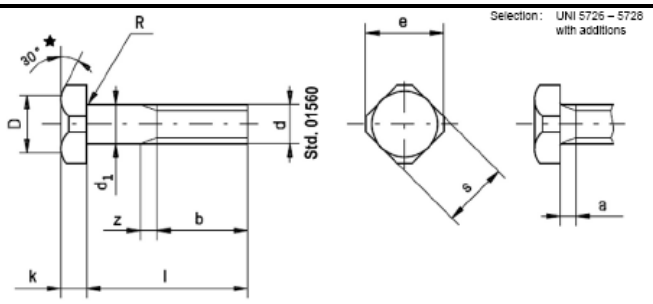

Part Number	Description	d1	b	s	e	k	Mat	Finish
11944610	Bolt, Sq Hd M6x20	6	18	10	13	4	5.8	PLN
11947510	Bolt, Sq Hd M8x25	8	22	13	17	5.5	5.8	PLN
11948724	Bolt, Sq Hd M8x60	8	22	13	17	5.5	8.8	DAC

Fiat 10413 **Screws with Collars Flat Head**

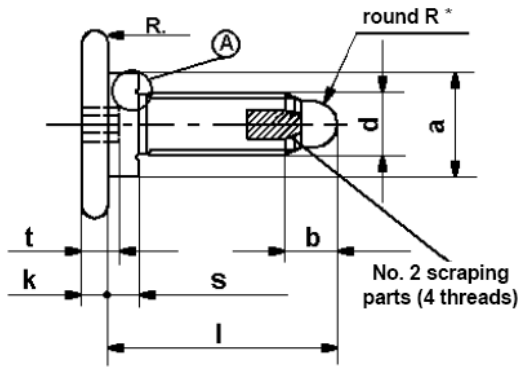

Part Number	Description	l	t	d	a	s	Mat	Finish
10558628	SCREW,FLAT-HD W/COLLAR M5X17 8.8 BZN	17	1.66	M5	7	2.5	8.8	BZN
10589928	SCREW,FLAT-HD W/COLLAR M6X17 8.8 BZN	17	3.2	M6	10	3.0	8.8	BZN
10585428	SCREW,FLAT-HD W/COLLAR M6X18.5 8.8 BZN	18.5	3.2	M6	10	3.5	8.8	BZN
10558728	SCREW,FLAT-HD W/COLLAR M6X22 8.8 BZN	22	3.7	M6	10	3	8.8	BZN
10558828	SCREW,FLAT-HD W/COLLAR M6X22 8.8 BZN	22	3.2	M6	10	3.5	8.8	BZN

Fiat 10413 **Screws with Collars Hexagonal Head**

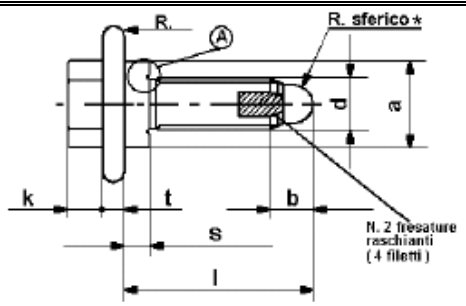

Part Number	Description	l	t	d	a	s	mat	fin
10558928	Screw.Hex-hd w/collar M6 x 22 8.8 BZN	22	2	M6	10	5	8.8	BZN

Fiat 10452 **Screws with Pan Head Square Neck**

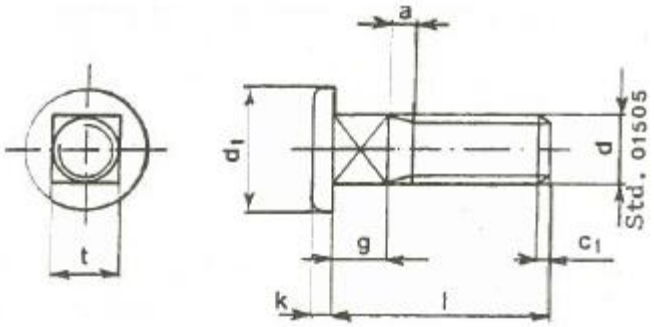

Part Number	d (6g)	d_1	k	g	t (h12)	a max.	$c_{1\ max}$	Mat	Finish
15966217	M6	10	1.5	4	6	2.5	1.8	5.8	BZN

Fiat 10453	Spherical Projection Screws for Projection Welding	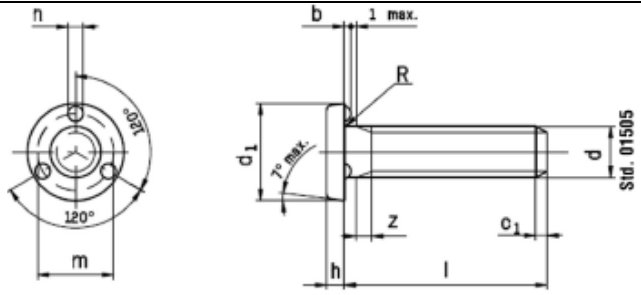

Part Number	Description	n	m	d	h	l	Mat	Finish
14082410	Screw. proj weld M4 x 16	2.5	9	M4	2	16	R50 SD STAB	PLN
14113510	Screw. proj weld M5 x 10	2.5	9.5	M5	2.5	10	R50 SD STAB	PLN
14113511	Screw. proj weld M5 x 10	2.5	9.5	M5	2.5	10	R50 SD STAB	ZND
14113810	Screw. proj weld M5 x 12	2.5	9.5	M5	2.5	12	R50 SD STAB	PLN
14113811	Screw. proj weld M5 x 12	2.5	9.5	M5	2.5	12	R50 SD STAB	ZND
14115211	Screw, proj weld M5 x 14	2.5	9.5	M5	2.5	14	R50 SD STAB	ZND
14114010	Screw, proj weld M5 x 16	2.5	9.5	M5	2.5	16	R50 SD STAB	PLN
14114011	Screw, proj weld M5 x 16	2.5	9.5	M5	2.5	16	R50 SD STAB	ZND
47711805	Screw, proj weld M5 x 16	2.5	9.5	M5	2.5	16	R50 SD STAB	PFL
14113911	Screw, proj weld M5 x 18	2.5	9.5	M5	2.5	18	R50 SD STAB	ZND
14115111	Screw, proj weld M5 x 20	2.5	9.5	M5	2.5	20	R50 SD STAB	ZND
14112911	Screw, proj weld M5 x 22	2.5	9.5	M5	2.5	22	R50 SD STAB	ZND
14112913	Screw, proj weld M5 x 22	2.5	9.5	M5	2.5	22	R50 SD STAB	PFL
47636554	Screw, proj weld M5 x 30	2.5	9.5	M5	2.5	30	R50 SD STAB	PFL
14114810	Screw, proj weld M6 x 10	2.5	10.5	M6	2.5	10	R50 SD STAB	PLN
14113610	Screw, proj weld M6 x 12	2.5	10.5	M6	2.5	12	R50 SD STAB	PLN
14082210	Screw. proj weld M6 x 14	2.5	10.5	M6	2.5	14	R50 SD STAB	PLN
14082211	Screw, proj weld M6 x 14	2.5	10.5	M6	2.5	14	R50 SD STAB	ZND
14082213	Screw, proj weld M6 x 14	2.5	10.5	M6	2.5	14	R50 SD STAB	PFL
14082221	Screw, proj weld M6 x 14	2.5	10.5	M6	2.5	14	R80 SD	ZND
14114710	Screw, proj weld M6 x 16	2.5	10.5	M6	2.5	16	R50 SD STAB	PLN
14114110	Screw, proj weld M6 x 18	2.5	10.5	M6	2.5	18	R50 SD STAB	PLN
14114113	Screw, proj weld M6 x 18	2.5	10.5	M6	2.5	18	R50 SD STAB	PFL
14141410	Screw, proj weld M6 x 20	2.5	10.5	M6	2.5	20	R50 SD STAB	PLN
14141413	Screw, proj weld M6 x 20	2.5	10.5	M6	2.5	20	R50 SD STAB	PFL
14141417	Screw, proj weld M6 x 20	2.5	10.5	M6	2.5	20	R50 SD STAB	ZND
47544651	Screw, proj weld M6 x 22	2.5	10.5	M6	2.5	22	R50 SD STAB	PLN
47424056	Screw, proj weld M6 x 25	2.5	10.5	M6	2.5	25	R50 SD STAB	PLN
47587201	Screw, proj weld M6 x 25	2.5	10.5	M6	2.5	25	R50 SD STAB	PFL
14082010	Screw, proj weld M6 x 28	2.5	10.5	M6	2.5	28	R50 SD STAB	PLN
14081610	Screw, proj weld M6 x 30	2.5	10.5	M6	2.5	30	R50 SD STAB	PLN
14081710	Screw, proj weld M6 x 40	2.5	10.5	M6	2.5	40	R50 SD STAB	PLN
14141910	Screw, proj weld M6 x 35	2.5	10.5	M6	2.5	35	R50 SD STAB	PLN
14141913	Screw, proj weld M6 x 35	2.5	10.5	M6	2.5	35	R50 SD STAB	PFL
14140821	Screw, proj weld M8 x 14	3	13	M8	3.5	14	R80 SD	ZND
14114910	Screw, proj weld M8 x 16	3	13	M8	3.5	16	R50 SD STAB	PLN
14114911	Screw, proj weld M8 x 16	3	13	M8	3.5	16	R50 SD STAB	ZND
47748851	Screw, proj weld M8 x 16	3	13	M8	3.5	16	R80 SD	PLN
14114921	Screw, proj weld M8 x 16	3	13	M8	3.5	16	R80 SD	ZND
14140910	Screw, proj weld M8 x 18	3	13	M8	3.5	18	R50 SD STAB	PLN
14140911	Screw, proj weld M8 x 18	3	13	M8	3.5	18	R50 SD STAB	ZND

Fiat 10453	Spherical Projection Screws for Projection Welding **Cont. from Previous Page**	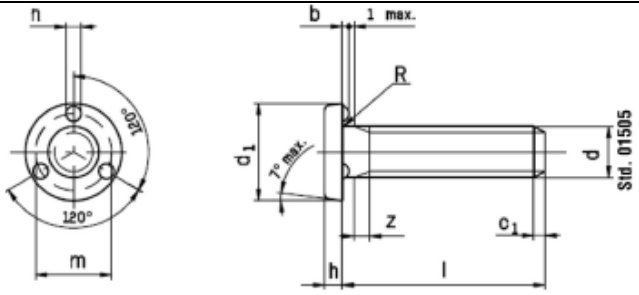						
Part Number	Description	n	m	d	h	l	Mat	Finish
14140920	Screw, proj weld M8 x 18	3	13	M8	3.5	18	R80 SD	PLN
14140921	Screw, proj weld M8 x 18	3	13	M8	3.5	18	R80 SD	ZND
14141010	Screw, proj weld M8 x 20	3	13	M8	3.5	20	R50 SD STAB	PLN
47558102	Screw, proj weld M8 x 20	3	13	M8	3.5	20	R50 SD STAB	PFL
47779215	Screw, proj weld M8 x 20	3	13	M8	3.5	20	R80 SD	PLN
92660376	Screw, proj weld M8 x 20	3	13	M8	3.5	20	R80 SD	ZND
14081011	Screw, proj weld M8 x 22	3	13	M8	3.5	22	R50 SD STAB	ZND
14081013	Screw, proj weld M8 x 22	3	13	M8	3.5	22	R50 SD STAB	PFL
47779236	Screw, proj weld M8 x 22	3	13	M8	3.5	22	R80 SD	PLN
14114310	Screw, proj weld M8x25	3	13	M8	3.5	25	R50 SD STAB	PLN
14114311	Screw, proj weld M8x25	3	13	M8	3.5	25	R50 SD STAB	ZND
47779247	Screw, proj weld M8x25	3	13	M8	3.5	25	R80 SD	PLN
92660379	Screw, proj weld M8x25	3	13	M8	3.5	25	R80 SD	ZND
14141110	Screw, proj weld M8x30	3	13	M8	3.5	30	R50 SD STAB	PLN
47779254	Screw, proj weld M8x30	3	13	M8	3.5	30	R80 SD	PLN
14115010	Screw, proj weld M8x35	3	13	M8	3.5	35	R50 SD STAB	PLN
47748855	Screw, proj weld M8x35	3	13	M8	3.5	35	R80 SD	PLN
14081120	Screw, proj weld M8x40	3	13	M8	3.5	40	R80 SD	PLN
14081418	Screw, proj weld M8x55	3	13	M8	3.5	55	R50 SD STAB	ZN
14081518	Screw, proj weld M8x60	3	13	M8	3.5	60	R50 SD STAB	ZN
14079818	Screw, proj weld M8x80	3	13	M8	3.5	80	R50 SD STAB	ZN
90335079	Screw, proj weld M10x1.25x20	3	15	M10x1.25	3.5	20	R50 SD STAB	PFL
14114410	Screw, proj weld M10x1.25x20	3	15	M10x1.25	3.5	20	R50 SD STAB	PLN
14141710	Screw, proj weld M10x1.25 x 30	3	15	M10X1.25	3.5	30	R50 SD STAB	PLN
47946850	Screw, proj weld M10x1.25 x 35	3	15	M10X1.25	3.5	35	R50 SD STAB	PLN
14114610	Screw, proj weld M10x1.25 x 50	3	15	M10X1.25	3.5	50	R50 SD STAB	PLN

Fiat 10453/01	Cone Point Screws for Projection Welding Steel Per Fiat 52605/02	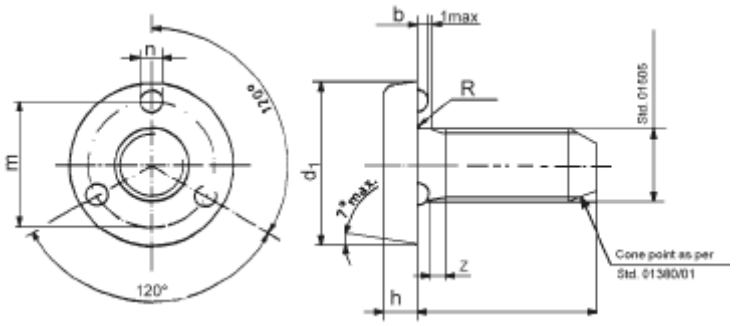					
Part Number	Description	n	m	h	l	Mat	Finish
14012210	Screw, Proj weld M6 x 16	2.5	10.5	2.5	16	R50 Sd Stab	PLN
14012520	Screw, Proj weld M6 x 22	2.5	10.5	2.5	22	R80 Sd	PLN
14012620	Screw, Proj weld M6 x 25	2.5	10.5	2.5	25	R80 Sd	PLN
14012720	Screw, Proj weld M6 x 28	2.5	10.5	2.5	28	R80 Sd	PLN
14012820	Screw, Proj weld M6 x 30	2.5	10.5	2.5	30	R80 Sd	PLN
14079510	Screw, Proj weld M8 x 20	3	13	3.5	20	R50 Sd Stab	PLN
14014110	Screw, Proj weld M8 x 25	3	13	3.5	25	R50 Sd Stab	PLN
14014111	Screw, Proj weld M8 x 25	3	13	3.5	25	R50 Sd Stab	ZND

Fiat 10453/02
Elongated Projection Weld Screws
Steel Per Fiat 52605/02

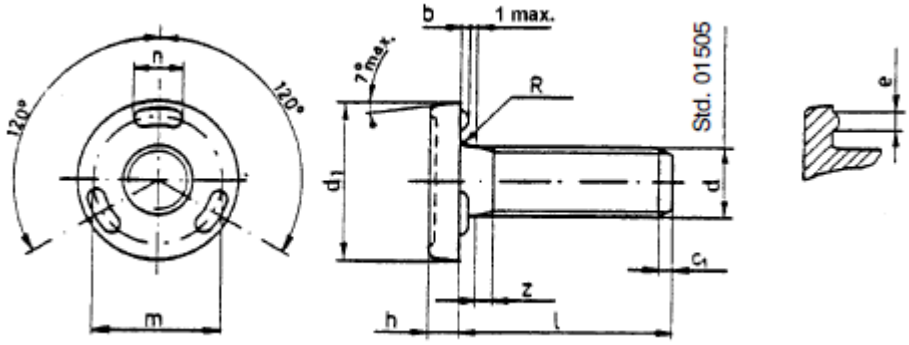

Part Number	Thread	d1	l	h ±0.15	b	e +0.15 0	c_1 max.	m min.	n +0.3 0	z max.	Material	Finish
14004310	M8	20.5	22	4.3	1.2	3.0	2.2	16.7	7.3	3.1	R50SDSTAB	PLN
47865963	M8	20.5	25	4.3	1.2	3.0	2.2	16.7	7.3	3.1	R80 SD	PFL
48032942	M8	20.5	30	4.3	1.2	3.0	2.2	16.7	7.3	3.1	R80 SD	PLN
48032944	M8	20.5	35	4.3	1.2	3.0	2.2	16.7	7.3	3.1	R80 SD	PLN
14005910	M10x1.25	24	18	4.8	1.4	3.4	2.2	19.5	7.5	3.1	R50SDSTAB	PLN
14006010	M10x1.25	24	20	4.8	1.4	3.4	2.2	19.5	7.5	3.1	R50SDSTAB	PLN
14006110	M10x1.25	24	22	4.8	1.4	3.4	2.2	19.5	7.5	3.1	R50SDSTAB	PLN
14006210	M10x1.25	24	25	4.8	1.4	3.4	2.2	19.5	7.5	3.1	R50SDSTAB	PLN
47943029	M10x1.25	24	25	4.8	1.4	3.4	2.2	19.5	7.5	3.1	R80 SD	PLN
14006310	M10x1.25	24	28	4.8	1.4	3.4	2.2	19.5	7.5	3.1	R50SDSTAB	PLN
14007610	M12x1.25	25.5	16	5	1.4	3.4	2.2	21.2	8.4	3.1	R50SDSTAB	PLN
14007710	M12x1.25	25.5	18	5	1.4	3.4	2.2	21.2	8.4	3.1	R50SDSTAB	PLN
14007910	M12x1.25	25.5	22	5	1.4	3.4	2.2	21.2	8.4	3.1	R50SDSTAB	PLN
14008010	M12x1.25	25.5	25	5	1.4	3.4	2.2	21.2	8.4	3.1	R50SDSTAB	PLN
14008110	M12x1.25	25.5	28	5	1.4	3.4	2.2	21.2	8.4	3.1	R50SDSTAB	PLN

Fiat 10453/20 Material Per Fiat 52605/02	Spherical Projection Pins for Projection Welding	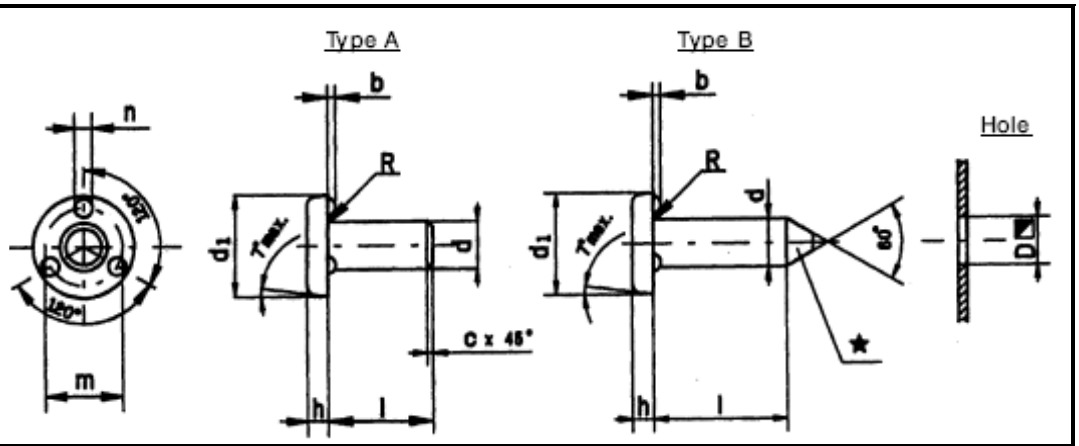

Part Number	Description	d	d1	D	h	b	n	m	l	Style	Mat	Fin
48087518	Pin, Proj Weld 6 x 7	6	14	6	2.5	1	2.5	10.5	7	A	R50 SD STAB	PLN
14117410	Pin, Proj Weld 6 x 12	6	14	6	2.5	1	2.5	10.5	12	B	R50 SD STAB	PLN
14079010	Pin, Proj Weld 8 x 10	8	17	8	3.5	1.3	3	13	10	A	R50 SD STAB	PLN
14079410	Pin, Proj Weld 8 x 35	8	17	8	3.5	1.3	3	13	35	A	R50 SD STAB	PLN

Fiat 10514	Slotted Cheese Head Screw	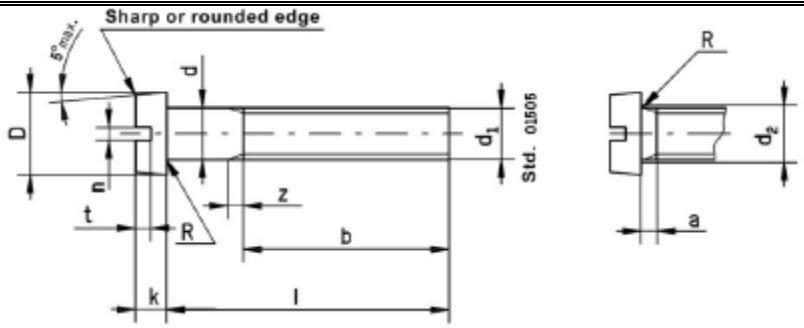

Part Number	Description	d_1	D	k	b	l	z max	Mat	Finish
10372411	SCREW, M3X25 CHEZ-HD SLT 5.8 ZND	M3	5.5	2	19	25	1.2	5.8	ZND
51611467	SCREW, M3X40 CHEZ-HD SLT 5.8 ZND	M3	5.5	2	39	40	1.2	5.8	ZND
10375011	SCREW, M4X14 CHEZ-HD SLT 5.8 ZND	M4	7	2.6	12.2	14	1.8	5.8	ZND
10375014	SCREW, M4X14 CHEZ-HD SLT 5.8 DAC	M4	7	2.6	12.2	14	1.8	5.8	DAC
10375177	SCREW, M4X16 CHEZ-HD SLT A2-70 BLO	M4	7	2.6	14.2	16	1.8	A2-70	BLO
10375414	SCREW, M4X25 CHEZ-HD SLT 5.8 DAC	M4	7	2.6	22	25	1.8	5.8	DAC
10389211	SCREW, M5X8 CHEZ-HD SLT 5.8 ZND	M5	8.5	3.3	6.4	8	2	5.8	ZND
10389611	SCREW, M5X16 CHEZ-HD SLT 5.8 ZND	M5	8.5	3.3	14	16	2	5.8	ZND
10389677	SCREW, M5X16 CHEZ-HD SLT A2-70 BLO	M5	8.5	3.3	14	16	2	A2-70	BLO
10376511	SCREW, M6X12 CHEZ-HD SLT 5.8 ZND	M6	10	3.9	10	12	2.5	5.8	ZND
51616476	SCREW, M6X12 CHEZ-HD SLT 5.8 DAC	M6	10	3.9	10	12	2.5	5.8	DAC

Fiat 10518 Part 1	Slotted Countersunk Head Screws	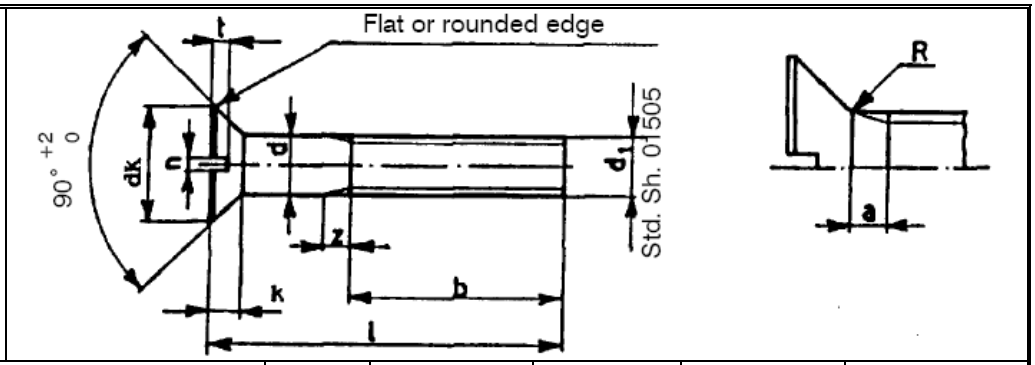

Part Number	Description	d	b	l	Mat	Finish
10352011	Screw,M4x14 5.8 ZND	4	Full	14	5.8	ZND
10352111	Screw,M4x16 5.8 ZND	4	Full	16	5.8	ZND
10352311	Screw,M4x20 5.8 ZND	4	Full	20	5.8	ZND
10384911	Screw,M5X12 5.8 ZND	5	Full	12	5.8	ZND
10384511	Screw,M5X30 5.8 ZND	5	25	30	5.8	ZND
10353511	Screw,M6X14 5.8 ZND	6	Full	14	5.8	ZND
10353611	Screw,M6X16 5.8 ZND	6	Full	16	5.8	ZND
10353811	Screw,M6X20 5.8 ZND	6	Full	20	5.8	ZND
47544558	Screw,M6X20 8.8 ZND	6	Full	20	8.8	ZND
10356321	Screw,M8x20 8.8 ZND	8	Full	20	8.8	ZND
51533226	Screw,M8x25 8.8 ZND	8	Full	25	8.8	ZND
51533227	Screw,M8x30 8.8 ZND	8	Full	30	8.8	ZND

Fiat 10631/02	Pan-HD PZ Cross Recess Tapping Screws with Wide Flange	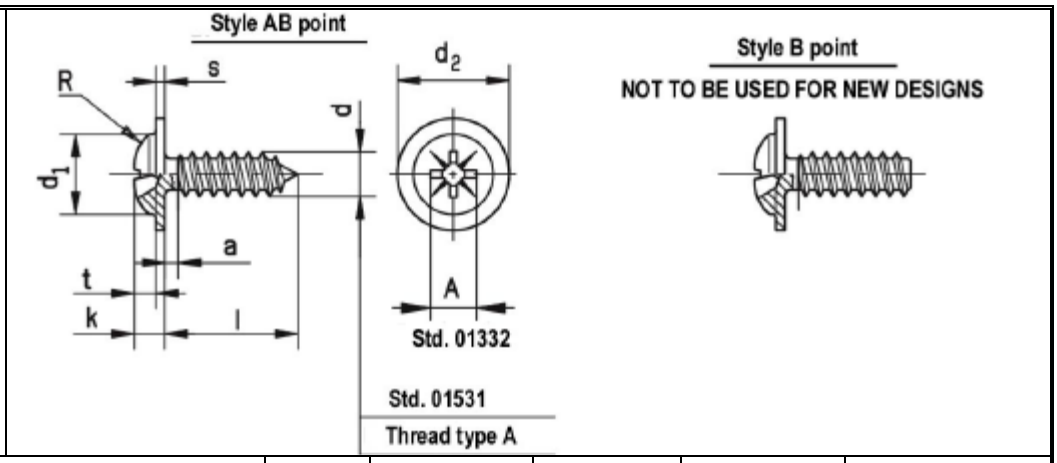

Part Number	Description	d	Point	l	Mat	Finish
90386416	Screw, Tapping PHD 3.5X6.5 AB	3.5	AB	6.5	R40 IND	DAC
90386419	Screw, Tapping PHD 3.5X9.5 AB	3.5	AB	9.5	R40 IND	DAC
15538704	Screw, Tapping PHD 4.2X13 AB	4.2	AB	13	R40 IND	DAC
15538709	Screw, Tapping PHD 4.2X13 AB	4.2	AB	13	R40 IND	FEZNNI7VIIS

Fiat 10638 Self-Drilling Tapping Screws W/ PZ C/R Pan Head

Dimensions in mm

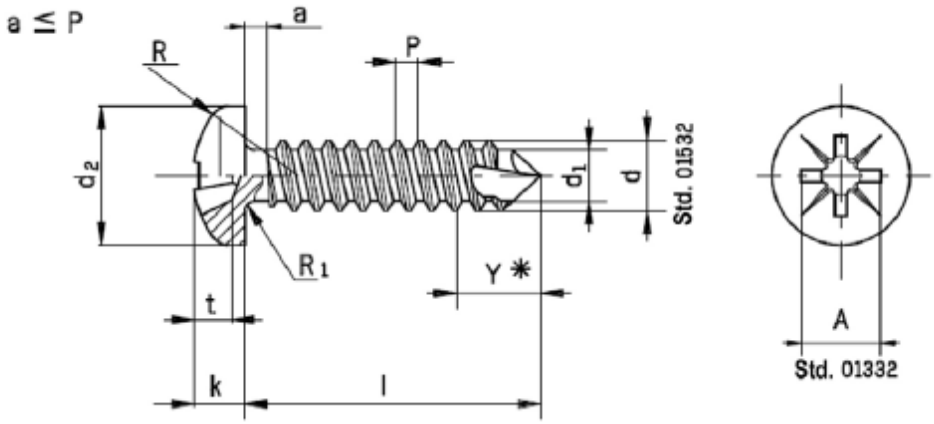

d	nom.	2,9	3,5	4,2	4,8	5,5	6,3
d_1	max.	2,29	2,80	3,28	3,76	4,32	5,03
	min.	2,18	2,67	3,15	3,63	4,19	4,90
Y	✳	4,1	4,8	5,4	6,0	7,0	8,1
P		1,06	1,27	1,41	1,59	1,81	1,81
d_2	max.	5,60	6,90	8,20	9,50	10,80	12,50
	min.	5,30	6,54	7,84	9,14	10,37	12,07
k	max.	2,20	2,60	3,05	3,55	3,95	4,55
	min.	1,95	2,35	2,75	3,25	3,65	4,25
R		4,4	5,4	6,2	7,2	8,2	9,5
R_1	max.	0,4	0,5	0,6	0,7	0,8	0,9
Cross recess	Recess No.	1	2	2	2	3	3
	A	2,9	3,9	4,3	4,7	6,2	6,7
	Depth. t max.	1,83	1,93	2,34	2,74	2,97	3,48
	Depth. t min.	1,58	1,47	1,88	2,28	2,51	3,02
Drillable thickness	max.	2,0	2,2	2,5	2,8	3,6	4,4

Part Number	d	P (pitch)	L	Tol.	Mat	Finish
15931011	4.2	1.41	13	+/-0.550	R50 IND	ZND
47881009	4.2	1.41	13		R50 IND	BZN
15931211	4.2	1.41	19	+/- 0.650	R50 IND	ZND
15931311	4.2	1.41	22		R50 IND	ZND
15931411	4.2	1.41	25		R50 IND	ZND

Fiat 10653/01 and 10653/02 Hex standard and large washer head tapping screw for soft materials.

Material: R40 IND per Fiat 52605/02
Two parallel threads. One is high and thin. The other is short and stubby

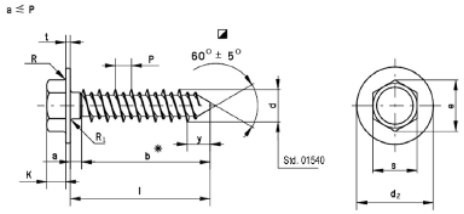

Part Number	D Dia	P Pitch	L Length	S max	d_2 max	Material	Finish
15516201	4	2.5	12	5.5	8.8	R40 IND	BZN
47874152	4	2.5	12	5.5	9.9	R40 IND	BGM
51666520	4	2.5	14	5.5	8.8	R40 IND	BZN
15516401	4	2.5	16	5.5	8.8	R40 IND	BZN
47599648	5.5	3	14	8.0	11.5	R40 IND	ZND
47599780	5.5	3	16	8.0	11.5	R40 IND	ZND
47599785	5.5	3	18	8.0	11.5	R40 IND	ZND
47599631	6	3.0	16	8.0	13.0	R40 IND	ZND
47502901	6	3.0	18	8.0	13.0	R40 IND	ZND
47502909	6	3.0	20	8.0	13.0	R40 IND	ZND
15697801	6	3.0	20	8.0	16.3	R40 IND	ZND
15697804	6	3.0	20	8.0	16.3	R40 IND	DAC
47502911	6	3.0	25	8.0	13.0	R40 IND	ZND
47556256	6	3.0	25	8.0	16.3	R40 IND	DAC
47866060	6	3.0	30	8.0	13.0	R40 IND	DAC
15698004	6	3.0	30	8.0	16.3	R40 IND	DAC
47903336	7	3.5	20	10.0	18.4	R40 IND	DAC
47521484	7	3.5	25	10.0	15.0	R40 IND	DAC
47912653	7	3.5	25	10.0	18.4	R40 IND	DAC
47903337	7	3.5	35	10.0	18.4	R40 IND	DAC
47912654	7	3.5	40	10.0	18.4	R40 IND	DAC

Iveco 11-0235 Hexagon Head Self Tapping Screws with Large Flange

Material: R40 IND Per Iveco Std 15-2605

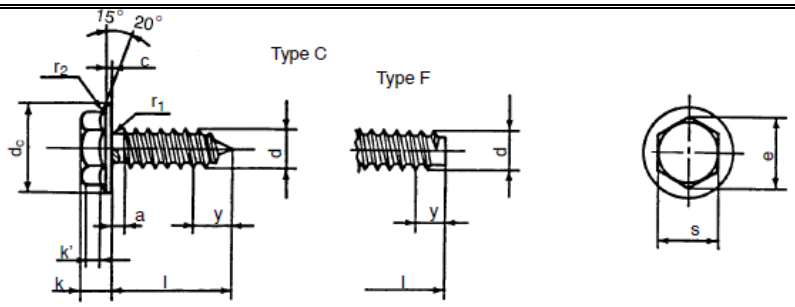

Part Number	Thread (d)	Pitch P	d_c (max)	Point Type	l	y	s (max)	Material	Finish
17935001	ST5.5	1.8	16	C	45	5	7.78	R40 IND	ZND

Iveco 11-0255 Round Head Self Tapping Screws with Normal Flange for Plastic Materials

Material: R40 IND Per Iveco Std 15-2605

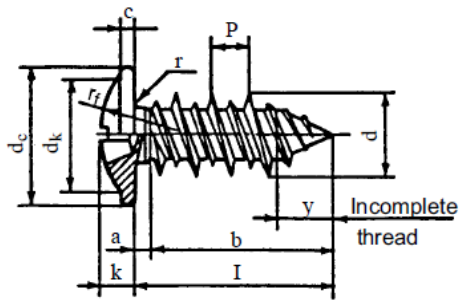

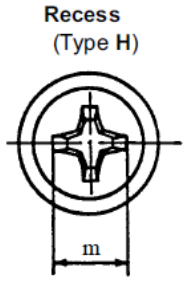

Part Number	Thread (d)	Pitch P	d_c (max)	a	l	y	m	Material	Finish
47948189	6	3.1	12.98	3.1	20	4.8	6.5	R40 IND	Fe/ZnNi VII S

Fiat 10654 Pan Head PZ Cross Recess Tapping Screws for soft material

Material: Fiat 52605/02

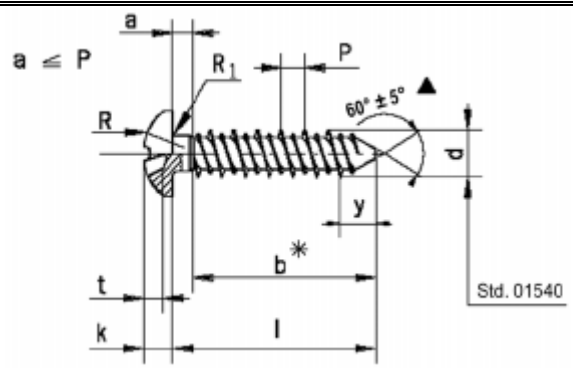

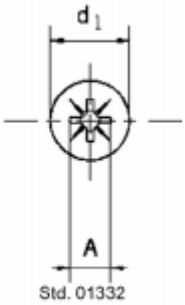

Part Number	Description	Pitch	Length	Matl	Finish
15963201	Screw, Tapping Pan-hd C/R-Z M4x14 Hi-Low	2.5	14	R40 IND	ZND
15956607	Screw, Tapping Pan-hd C/R-Z M3x12 Hi-Low	3	12	R40 IND	BZN
15957101	Screw, Tapping Pan-hd C/R-Z M3.5x10 Hi-Low	3.5	10	R40 IND	ZND
15957177	Screw, Tapping Pan-hd C/R-Z M3.5x10 Hi-Low	3.5	10	A2-70	PLN
15957377	Screw, Tapping Pan-hd C/R-Z M3.5x16 Hi-Low	3.5	16	A2-70	PLN
15957877	Screw, Tapping Pan-hd C/R-Z M4x12 Hi-Low	2.5	12	A2-70	BLO
15958001	Screw, Tapping Pan-hd C/R-Z M4x20 Hi-Low	2.5	20	R40 IND	ZND
15958107	Screw, Tapping Pan-hd C/R-Z M4X25 Hi-Low	2.5	25	R40 IND	BZN
15958701	Screw, Tapping Pan-hd C/R-Z M5x12 Hi-Low	3	12	R40 IND	ZND
15958704	Screw, Tapping Pan-hd C/R-Z M5x12 Hi-Low	3	12	R40 IND	DAC
15958804	Screw, Tapping Pan-hd C/R-Z M5x16 Hi-Low	3	16	R40 IND	DAC
15959204	Screw, Tapping Pan-hd C/R-Z M5x20 Hi-Low	3	20	R40 IND	DAC
15959301	Screw, Tapping Pan-hd C/R-Z M5x25 Hi-Low	3	25	R40 IND	ZND
15959504	Screw, Tapping Pan-hd C/R-Z M5x30 Hi-Low	3	30	R40 IND	DAC

Fiat 10655 Raised Countersunk Head PZ Cross Recess Tapping Screws for soft material	Material: Fiat 52605/02 R40 IND	Dimensions in mm 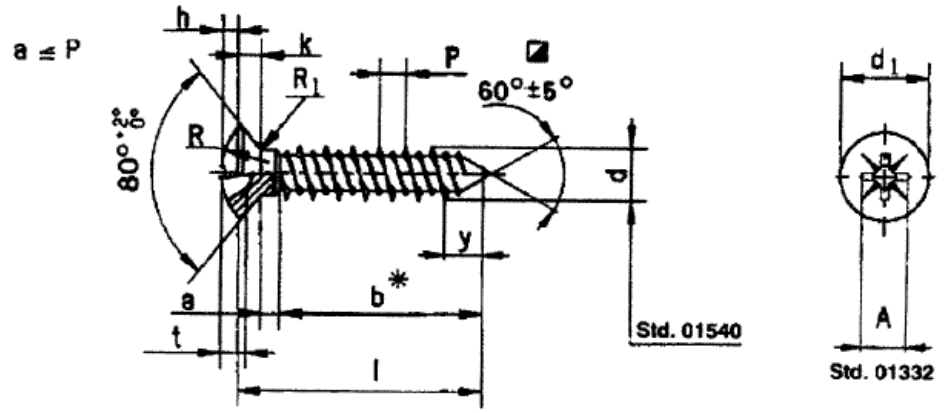

Part Number	Description	Dia	Pitch	Length	Matl	Finish
12670407	Screw, Tapping Oval-hd C/R-Z 3.5X2.5X18 FULL	3.5	2.5	18	R40 IND	ZND
12674404	Screw, Tapping Oval-hd C/R-Z 5X3.0X16 FULL	5	3.0	16	R40 IND	DAC

Fiat 10656 Countersunk Head PZ Cross Recess Tapping Screws for soft material	Material: Fiat 52605/02 R40 IND	Dimensioni in mm 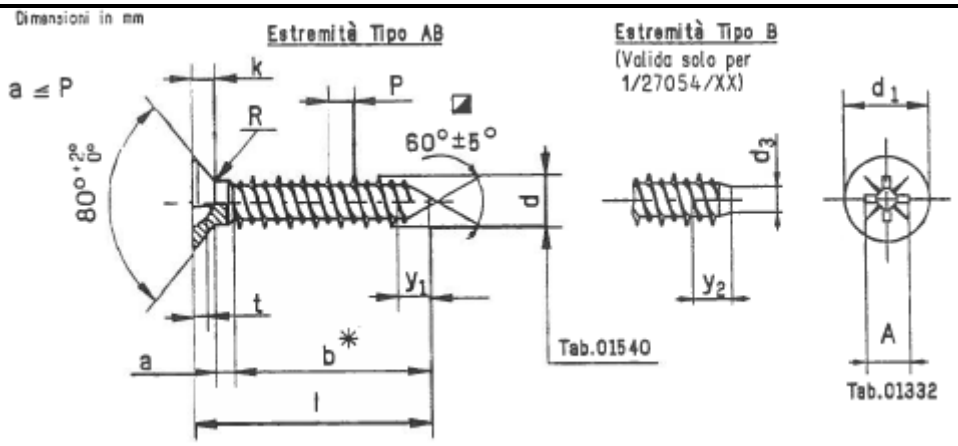

Part Number	Description	Dia	Pitch	Length	Matl	Finish
12678801	Screw,Tapping FCS C/R-Z 3X2X8	3	2	8	R40 IND	ZND
12678401	Screw,Tapping FCS C/R-Z 4X2.5X14	4	2.5	14	R40 IND	ZND

Fiat 10670 Hex Head Tapping Screws

Material: Fiat 52605/01

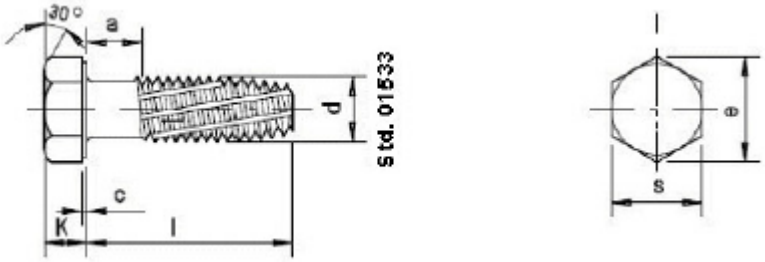

Part Number	Dia	Pitch	l	K	a	s	Matl	Finish
47548184	5	0.8	12	3.5	0.8	8	R 50 IND	ZND
14038214	8	1.25	20	5.5	1.25	13	R 50 IND	DAC

Fiat 10710 Protective Caps

Material: Fiat Polyethylene 55250

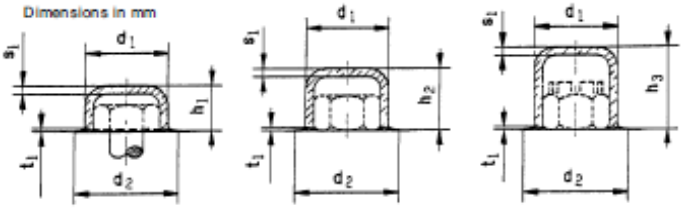

Part Number	Description	s	h1	h2	h3	d1	d2	s1	t1	Matl	Finish
15811187	Cover, Protective 10 x 6.5	10	6.5	-	-	12	13	1.2	0.3	Poly	BLK
47554582	Cover, Protective 10 x 10	10	-	10	-	12	13	1.2	0.3	Poly	BLK
15811387	Cover, Protective 10 x 13.5	10	-	-	13.5	12	13	1.2	0.3	Poly	BLK
15811487	Cover, Protective 13 x 8.5	13	8.5	-	-	16	18	1.4	0.4	Poly	BLK
15811587	Cover, Protective 13 x 13.5	13	-	13.5	-	16	18	1.4	0.4	Poly	BLK
15811787	Cover, Protective 17 x 10.5	17	10.5	-	-	21	23	1.6	0.4	Poly	BLK
47942316	Cover, Protective 17 x 14	17	-	14	-	21	23	1.6	0.4	Poly	BLK
47942319	Cover, Protective 17 x 19	17	-	-	19	21	23	1.6	0.4	Poly	BLK
47942321	Cover, Protective 19 x 14	19	-	14	-	23	26	1.8	0.4	Poly	BLK

Fiat 12128 Thin Narrow Button Head Semitubular rivets

Material: Fiat 53551 or 53550 Copper

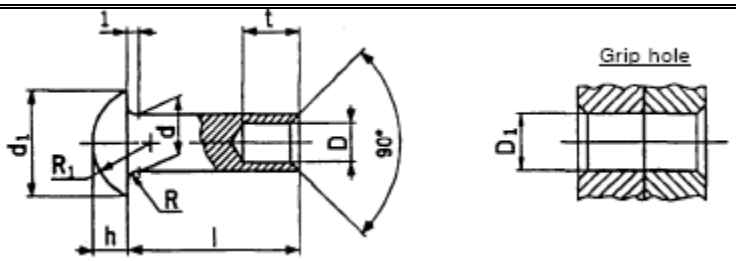

Part Number	Description	d	l	d1	h	D	t	Finish
13761760	Rivet, 2.6 x 4mm Copper	2.6	4	4.6	1.2	1.4	2.6	Copper

Fiat 12135	Flat Head Threaded Tubular Rivets Style A ***part not covered in Fiat 12135	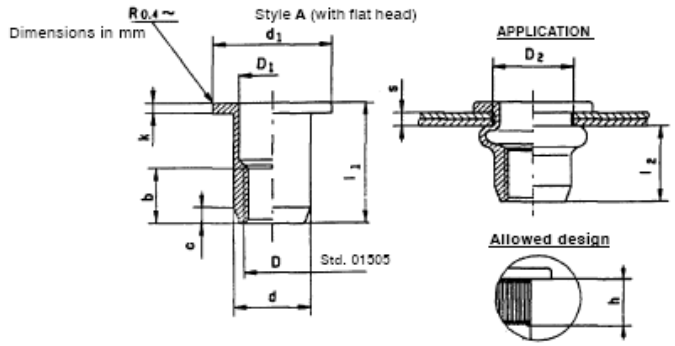

Part Number	Description	D	D1	d	d1	D2	s	b	l1
15627411	RIVET,FLAT HD M4X10.5 THDED STYLE A R50 ZND	M4	5	6	10	6	0.4 to 2.0	5	10.5
15627611	RIVET,FLAT HD M5X12.5 THDED STYLE A R50 ZND	M5	6	7	11	7	0.4 to 2.5	6	12.5
15627011	RIVET,FLAT HD M6X15.5 THDED STYLE A R50 ZND	M6	7.5	9	12	9	3.0 to 4.5	6	15.5
15628511	RIVET,FLAT HD M6X16 THDED STYLE A R50 ZND	M6	7.5	9	13	9	0.4 to 3.0	8	16
15629111	RIVET, FLAT HD M8X17.5 THDED STYLE A R50 ZND	M8	9.5	11	16	11	0.4 to 3.5	9	17.5
90448361	RIVET, FLAT HD M8X17.5 THDED STYLE A R50 BGM	M8	9.5	11	16	11	0.4 to 3.5	9	17.5
15629114	RIVET, FLAT HD M8X17.5 THDED STYLE A R50	M8	9.5	11	16	11	0.4 to 3.5	9	17.5
15629311	RIVET, FLAT HD M10X1.25 X 23 THDED STYLE A R50	M10x1.25	11.5	13	18	13	0.5 to 3.5	10	23
***84214045	RIVET, FLAT HD M10 X 25.75 STYLE A	M10		12.98	19	12.98	-	12.5	25.75

Fiat 12135 Flat Head Threaded Tubular Rivets Style C	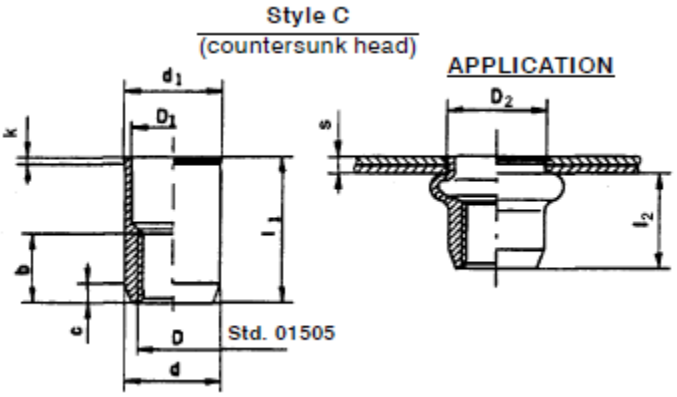

Part #	D_2	Grip Range s	D (6H)	D_1 +/-0.2	d -0.03 -0.10	d_1 +0.5 0	k +/-0.12	b min	c max	l_1 +/- 0.5	l_2	Material	Finish
15629711	9	0.7 to 3.0	M6	7.7	9	9.8	0.7	8	1.4	15	9.5	R50 RCT	ZND
15629811	11	0.7 to 4.0	M8	9.5	11	11.7	0.7	9	1.7	16	9.5	R50 RCT	ZND

Fiat 12135/01	Flat Head, Closed End, Threaded Tubular Hexagon Rivets	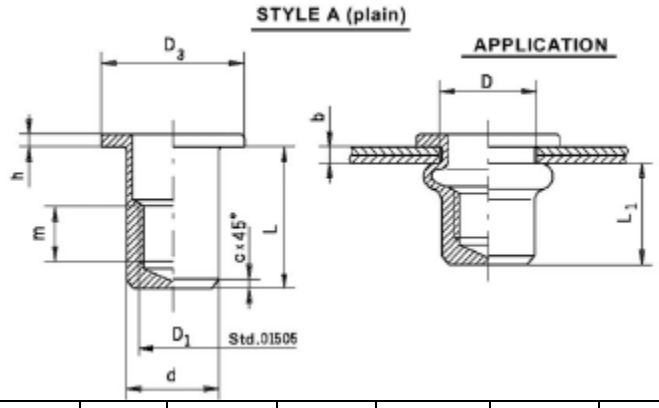						
Part Number	Description	**D**	**D1**	**d**	**L**	**L1**		**Mat/Fin**
15625211	Rivet, M8 FHD Closed End	11	M8	11	22.5	16		STL/ZND

Fiat 12136	Flat Head Threaded Tubular Hexagon Rivets	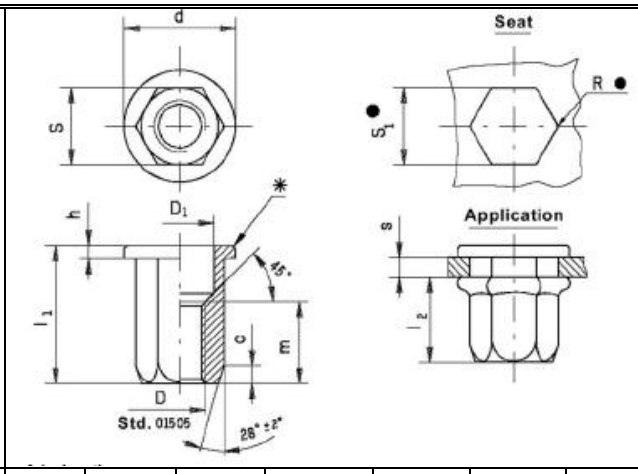								
Part Number	Description	D	S	Seat S_1	d	h	l1	l2	FIN	MAT
15624211	RIVET, FLAT HD M4 X 10	M4	6	6	9	0.8	10	6.5	ZND	R50
15624311	RIVET, FLAT HD M5 X 7	M5	7	7	10	1.0	14	7	ZND	R50
15624411	RIVET, FLAT HD M6X16	M6	9	9	13	1.2	16	9.5	ZND	R50
350339312	RIVET, FLAT HD M6X15	M6	9	9	10	0.6	15	9.5	ZND	R50
350339317	RIVET, FLAT HD M8X16	M8	11	11	12	0.6	16	9.5	ZND	R50
15624511	RIVET, FLAT HD M8X17	M8	11	11	16	1.3	17	9.5	ZND	R50
350339318	RIVET, FLAT HD M8X18.5	M8	11	11	12	0.6	18.5	9.5	ZND	R50

Fiat 12136/01 Flat Head Threaded Tubular Hexagon Blind Rivets

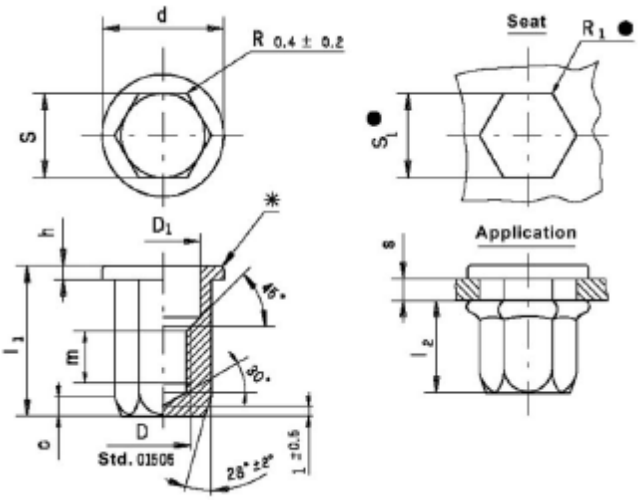

Part Number	S_1	Grip Range s	D (6H)	S nom	S	D_1 +/-0.2	d +2 -0.2	h +0.5 -0.1	m min	c	l_1 +/-1.5	l_2	FIN	Mat.
47466102	7	0.5 – 2.5	M5	7	+0 -0.09	6.0	10	1.0	5	2.0	18	14	ZND	R50
15180411	9	0.5 – 3.0	M6	9	+0 -0.09	8.1	12	1.2	6	2.7	22.5	17	ZND	R50
47636463	11	0.5 – 3.5	M8	11	+0 -0.11	10	14	1.3	8	3.3	25.0	19.5	ZND	R50

Button Head Tapping Rivets Fiat 12140

Steel Per 52605/02

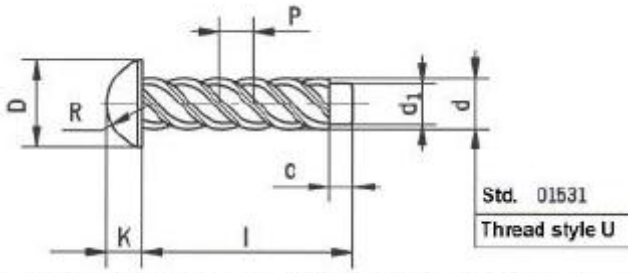

Examples of application: (sheet metal, castings, synthetic resin and other parts).

Part Number	d	d1	l	D Max	K Max	P	R	c	Material	Finish
13683701	2.5	2.1	6.5	4.1	1.75	0.785	2.1	1	R40 IND	ZND
13683801	2.9	2.43	5	5.35	2.18	1.08	2.7	1	R40 IND	ZND
47692101	3.5	2.94	9.5	6.6	2.6	1.3	3.3	1.5	R40 IND	ZND

Fiat 12252	Safety Retainers for Shafts	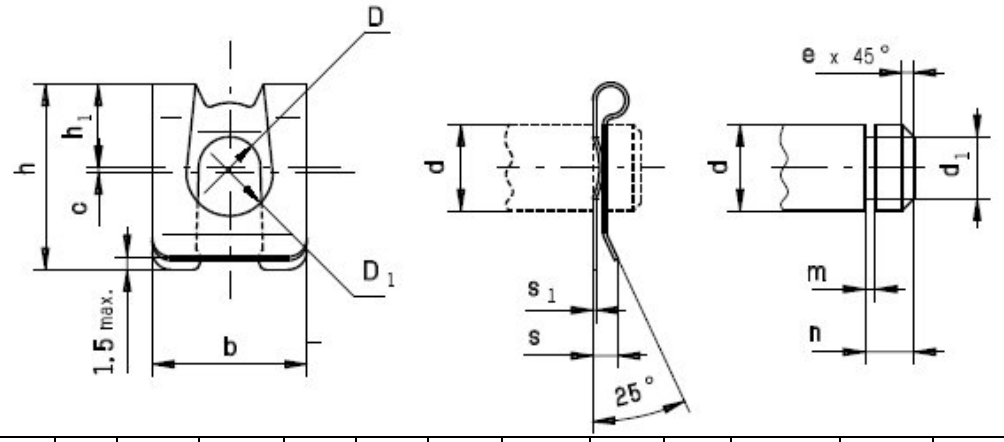

Part Number	Desc	d	b	h	h1	D	D1	s	s1	c	d1	Finish	m	n	e
91711751	M4 X 3.2	4	7	8.5	4	3.2	4	2.2	0.30	0.3	3.2	DAC	0.64	2	0.5
11063876	M5 X 4	5	9	10.8	5	4	5	2.8	0.35	0.3	4	BLO	0.74	2.5	0.5
11063974	M6 X 5	6	11	12.8	6	5	6	2.8	0.35	0.3	5	DAC	0.74	3	0.75
11063976	M6 X 5	6	11	12.8	6	5	6	2.8	0.35	0.3	5	BLO	0.74	3	0.75
11063971	M6 X 5	6	11	12.8	6	5	6	2.8	0.35	0.3	5	ZND	0.74	3	0.75
11064076	M8 X 6	8	14	16.5	8	6	8	4	0.45	0.4	6	BLO	0.94	3.5	1
11064071	M8 X 6	8	14	16.5	8	6	8	4	0.45	0.4	6	ZND	0.94	3.5	1
11064176	M10 X 8	10	18	22	10	8	10	5	0.50	0.4	8	BLO	1.05	4.5	1
11064171	M10 X 8	10	18	22	10	8	10	5	0.50	0.4	8	ZND	1.05	4.5	1
11064174	M10 X 8	10	18	22	10	8	10	5	0.50	0.4	8	DAC	1.05	4.5	1
11064276	M12 X 9	12	22	25.5	12	9	12	5	0.55	0.5	9	BLO	1.15	5	1.25
11064374	M14 X 10	14	25	30	13.5	10	14	5.3	0.60	0.5	10	DAC	1.25	5.5	1.25
11064376	M14 X 10	14	25	30	13.5	10	14	5.3	0.60	0.5	10	BLO	1.25	5.5	1.25
47554724	M16 X 12	16	28	34	16	12	16	5.8	0.65	0.5	12	ZND	1.35	6	1.5
90411979	M16 X 12	16	28	34	16	12	16	5.8	0.65	0.5	12	BGM	1.35	6	1.5

Fiat 12506
Round End
Dowel Pins
Material: Steel
Per Fiat
52605/01

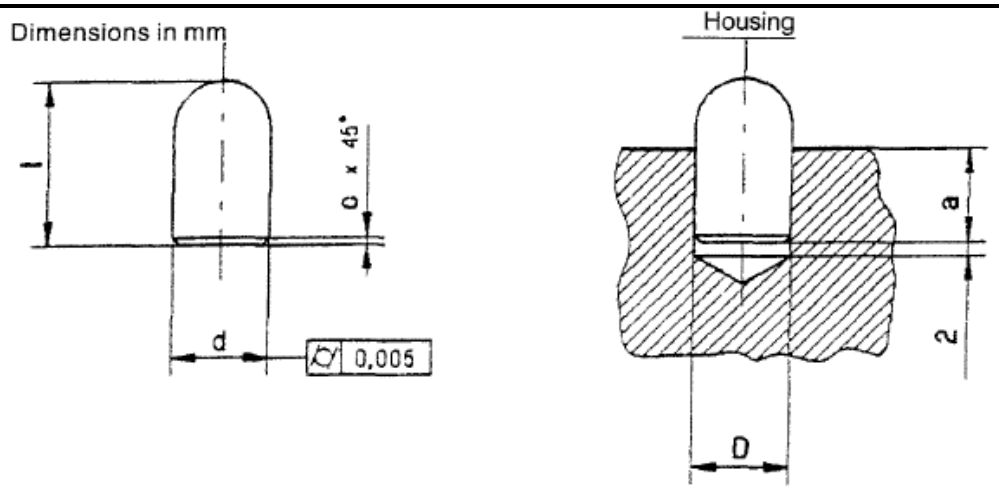

Part Number	d (h8) nom.	d devtn. limit	l	c	a	D nom.	D devtn. Limit on aluminum	D devtn. Limit on steel	Mat'l	Finish
10837610	8	0 -0.022	22	0.6	14	8	-0.030 -0.080	-0.019 -0.041	R50	PLN
10837710	10	0 -0.022	25	1.0	15	10	-0.030 -0.080	-0.019 -0.041	R50	PLN
10837810	12	0 -0.027	30	1.0	18	12	-0.050 -0.100	-0.023 -0.050	R50	PLN

Fiat 12508
Two Diameter
locating Pins
Material: Fiat
52605/01

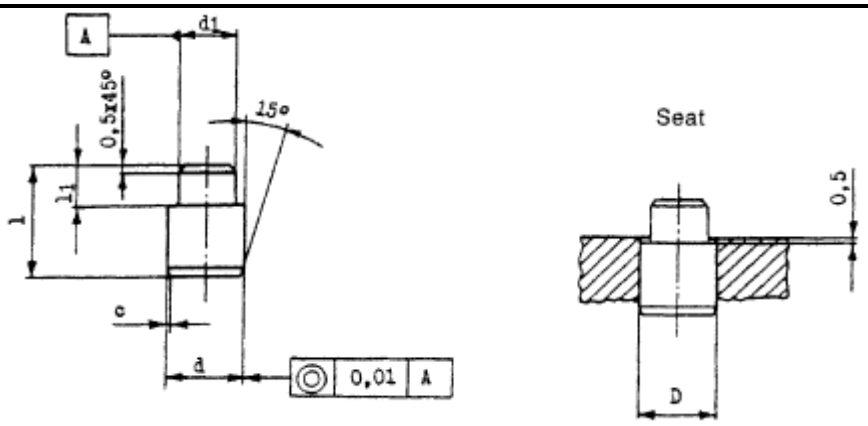

Part Number	d	d_1	l	l_1	c	D	Material	Finish
10799310	10	9	15	5	0.6	10	R50	PLN

Fiat 12520 Slotted Set Screws

Material: Fiat 52605/01

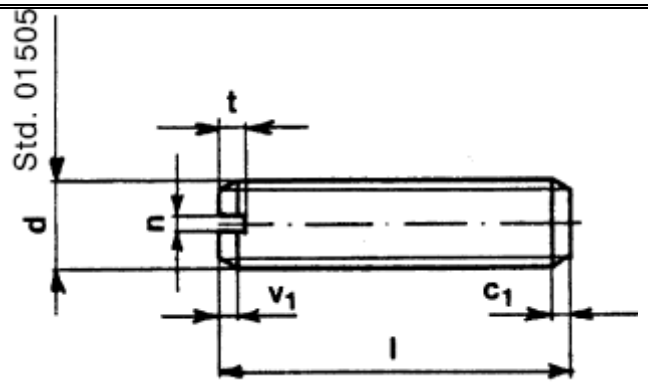

Part Number	Description	Dia	Length	n	t	v_1	c_1	Mat'l	Finish
13713214	SET SCREW, M8 X 25	M8	25	1.2	2.5	1.8	2.2	5.8	DAC
13781910	SET SCREW, M10 X 1.25 X 12	M10x1.25	12	1.6	3	1.8	2.2	5.8	PLN
13785210	SET SCREW, M10 X 1.25 X 16	M10x1.25	16	1.6	4	2.2	2.6	5.8	PLN
13785710	SET SCREW, M10 X 1.25 X 28	M10x1.25	28	1.6	4	2.2	2.6	5.8	PLN

Fiat 12522 Part 1 Slotted Set Screws with cone point.

Material: Fiat 52605/01

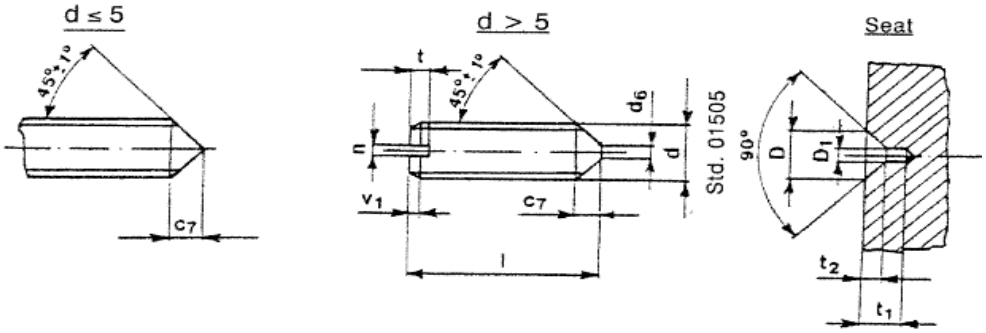

Example of designation
1/37367/10 – Std. Sh. 12522 – Slotted setscrew with cone point M5x16 – Mat. 5.8.

Thread **d** 6g		M3	M4	M5	M6	M8	M10x1.25
n	nom.	0.5	0.6	0.8	1	1.2	1.6
	devtn. limit	+0.20 +0.06				+0.31 +0.06	
t	nom.	1.2	1.4	1.8	2	2.5	3
	devtn. limit	+0.4 0		+0.5 0			
v_1	max.	0.8	1.0	1.2	1.5	1.8	1.8
D		2.2	2.9	3.8	4.5	6	7
D_1		1	1	1.5	1.5	2	2.5
t_1		1.5	2	2.5	3	4	5.2
t_2		0.6	1	1.2	1.5	2	2.2
c_7		1.5	2	2.5	2.5	3	4
d_6		–	–	–	1	2	2

Part Number	Description			Dia	Length	Matl	Finish
13739610	SET SCREW, M8 X 12			8	12	5.8	PLN
13739811	SET SCREW, M8 X 16			8	16	5.8	ZND

Fiat 12522 Part 2 Slotted Set Screws with cone point.

Material: Fiat 52605/01

Dimensions in mm

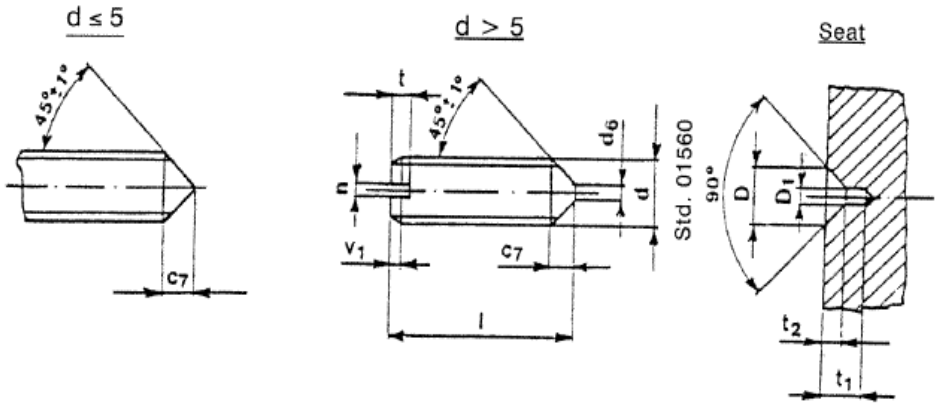

Example of designation

1/37318/10 – Std. Sh. 12522 Slotted setscrew with cone point M2x8 – Mat. 5.8.

Thread d 6g		M2	M3	M4	M5	M6	M8	M10x1.25	M12x1.5
n	nom.	0.3	0.5	0.6	0.8	1	1.2	1.6	2
	devtn. limit	+0.20 +0.06					+0.31 +0.06		
t	nom.	0.8	1.2	1.4	1.8	2	2.5	3	4
	devtn. limit	+0.3 0	+0.4 0		+0.5 0				+0.6 0
v_1	max.	0.6	0.8	1.0	1.2	1.5	1.8	1.8	2.2
D		–	2.2	2.9	3.8	4.5	6	7	9
D_1		–	1	1	1.5	1.5	2	2.5	4
t_1		–	1.5	2	2.5	3	4	5.2	5.5
t_2		–	0.6	1	1.2	1.5	2	2.2	2.5
c_7		1	1.5	2	2.5	2.5	3	4	5
d_6		–	–	–	–	1	2	2	2

Part Number	Description	Dia	Length	Matl	Finish
13734811	SET SCREW, M4 X 5	4	5	5.8	ZND

Fiat 12706 and DIN 7985

PZ Cross Recessed Raised Thin Cheese Head Bolts CL 5.8

Recessed Raised Cheese Head Screws
Screw noted with *

#Non-Standard

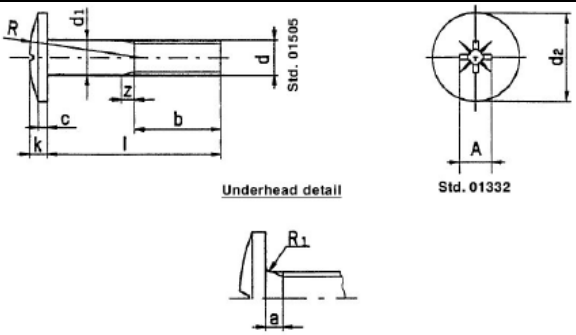

Part Number	Description	d_1	d	l	k	d_2	R	Finish
47920065	SCREW, M4X8 C/R CHEESE HD 5.8 BZN	4	0.7	8	2.5	11	11	BZN
14775214	SCREW, M4X8 C/R CHEESE HD 5.8 DAC	4	0.7	8	2.5	11	11	DAC
47925756	SCREW, M4X12 C/R CHEESE HD 5.8 BZN	4	0.7	12	2.5	11	11	BZN
14775314	SCREW, M4X12 C/R CHEESE HD 5.8 DAC	4	0.7	12	2.5	11	11	DAC
14776214	SCREW, M4X22 C/R CHEESE HD 5.8 DAC	4	0.7	22	2.5	11	11	DAC
14071914	SCREW, M5X12 C/R CHEESE HD 5.8 DAC	5	0.8	12	3	13	15	DAC
84479750#	SCREW, M5X12 C/R CHEESE HD 5.8 BZN	5	0.8	12	4	10		BZN
14778711	SCREW, M6X10 C/R CHEESE HD 5.8 ZND	6	1	10	3	15	20	ZND
14778714	SCREW, M6X10 C/R CHEESE HD 5.8 DAC	6	1	10	3	15	20	DAC
14064514	SCREW, M6X12 C/R CHEESE HD 5.8 DAC	6	1	12	3	15	20	DAC
84479751#	SCREW, M6X12 C/R CHEESE HD 5.8 BZN	6	1	12	4	14		BZN
14778011	SCREW, M6X14 C/R CHEESE HD 5.8 ZND	6	1	14	3	15	20	ZND
14778014	SCREW, M6X14 C/R CHEESE HD 5.8 DAC	6	1	14	3	15	20	DAC
14778814	SCREW, M6X16 C/R CHEESE HD 5.8 DAC	6	1	16	3	15	20	DAC
5183681	SCREW, M6X16 C/R CHEESE HD 5.8 BGM	6	1	16	3	15	20	BGM
84479753#	SCREW, M6X16 C/R CHEESE HD 5.8 BZN	6	1	16	4	14		BZN
87664045	SCREW, M6X20 C/R CHEESE HD 5.8 PHC	6	1	20	3	15	20	PHC
14778411	SCREW, M6X20 C/R CHEESE HD 5.8 ZND	6	1	20	3	15	20	ZND
84479754#	SCREW, M6X20 C/R CHEESE HD 5.8 BZN	6	1	20	4	14		BZN
14778914	SCREW, M6X22 C/R CHEESE HD 5.8 DAC	6	1	22	3	15	20	DAC
84554745#	SCREW, M6X22 C/R CHEESE HD 5.8 BZN	6	1	22	3	15	20	BZN
14778911	SCREW, M6X22 C/R CHEESE HD 5.8 ZND	6	1	22	3	15	20	ZND
14064114	SCREW, M6X25 C/R CHEESE HD 5.8 DAC	6	1	25	3	15	20	DAC
14064214	SCREW, M6X30 C/R CHEESE HD 5.8 DAC	6	1	30	3	15	20	DAC
14779014	SCREW, M6X35 C/R CHEESE HD 5.8 DAC	6	1	35	3	15	20	DAC
14781714	SCREW, M8X16 C/R CHEESE HD 5.8 DAC	8	1.25	16	4	20	26	DAC
14781811	SCREW, M8X18 C/R CHEESE HD 5.8 ZND	8	1.25	18	4	20	26	ZND
14781814	SCREW, M8X18 C/R CHEESE HD 5.8 DAC	8	1.25	18	4	20	26	DAC
14781914	SCREW, M8X20 C/R CHEESE HD 5.8 DAC	8	1.25	20	4	20	26	DAC
14780511	SCREW, M8X25 C/R CHEESE HD 5.8 ZND	8	1.25	25	4	20	26	ZND
14065011	SCREW, M8X30 C/R CHEESE HD 5.8 ZND	8	1.25	30	4	20	26	ZND
14780711	SCREW, M8X35 C/R CHEESE HD 5.8 ZND	8	1.25	35	4	20	26	ZND

FIAT 12706 (CON'TD)								
84554746#	SCREW, M8X35 C/R CHEESE HD 5.8 BZN	8	1.25	35	4	20	26	BZN
*120223	SCREW, M8X40 C/R-Z CHEESE HD 5.8 PLN	8	1.25	40	6	16		PLN
14780911	SCREW, M8X45 C/R CHEESE HD 5.8 ZND	8	1.25	45	4	20	26	ZND
14783714	SCREW, M10X1.25X16 C/R CHE HD 5.8 DAC	10	1.25	16	5	25	32	DAC
14783914	SCREW, M10X1.25X20 C/R CHE HD 5.8 DAC	10	1.25	20	5	25	32	DAC
14782514	SCREW, M10X1.25X25 C/R CHE HD 5.8 DAC	10	1.25	25	5	25	32	DAC
14782511	SCREW, M10X1.25X25 C/R CHE HD 5.8 ZND	10	1.25	25	5	25	32	ZND
14782614	SCREW, M10X1.25X30 C/R CHE HD 5.8 DAC	10	1.25	30	5	25	32	DAC
14782611	SCREW, M10X1.25X30 C/R CHE HD 5.8 ZND	10	1.25	30	5	25	32	ZND
14782714	SCREW, M10X1.25X35 C/R CHE HD 5.8 DAC	10	1.25	35	5	25	32	DAC
14782814	SCREW, M10X1.25X40 C/R CHE HD 5.8 DAC	10	1.25	40	5	25	32	DAC

Fiat 12717 Washers for Countersunk hd Screws

Material: Fiat Steel 52135

STYLE N
(normal, for use on hard materials)

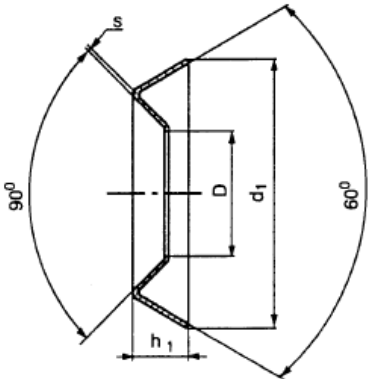

Part Number	Description	D	d1	s	h1	Matl	Finish
13336407	WASHER, Style N Size 5	5	12	0.3	2.1	CST	BZN

Fiat 12753 Stud Fastenerss	Material: Plastic 55232 and 55246	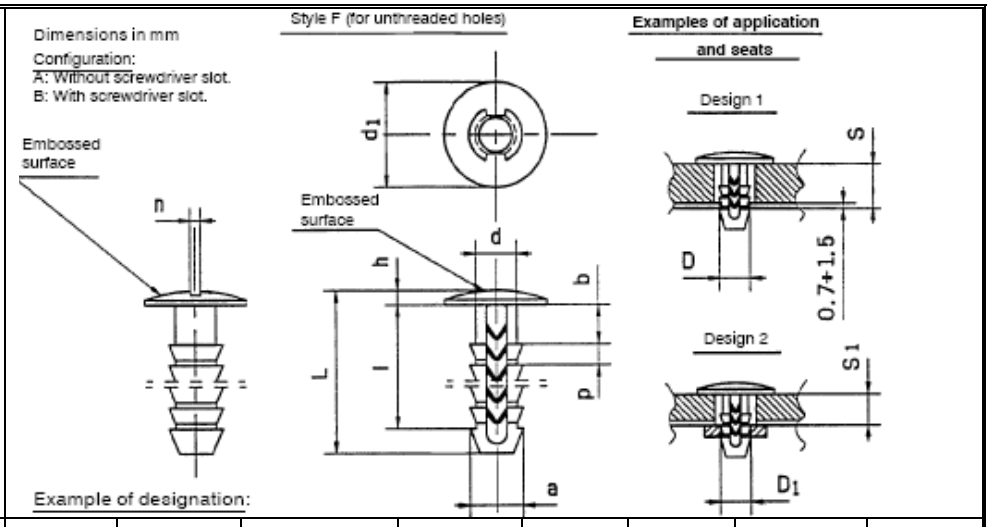

Part Number	Design (d xl)	d	b	d_1	a	l	L	Matl	Finish
14591687	6.5 x 7.5	6.5	2.5	15	8	7.5	14.5	Plastic	Black
14591987	6.5 x 12	6.5	3	20	8	12	19	Plastic	Black
14591887	6.5 x 18	6.5	6	15	8	18	25	Plastic	Black
92720602	6.5 x 22.5	6.5	4.5	20	8	22.5	30	Plastic	Black
14589987	8 x 23.5	8	3.5	20	9.5	23.5	31.5	Plastic	Black
92726596	8.5 x 19	8.5	4	26	11.2	19	27.5	Plastic	Black

Fiat 12753 Stud Fasteners	Material: Vinyl Plastic 55251 Rubber 55272	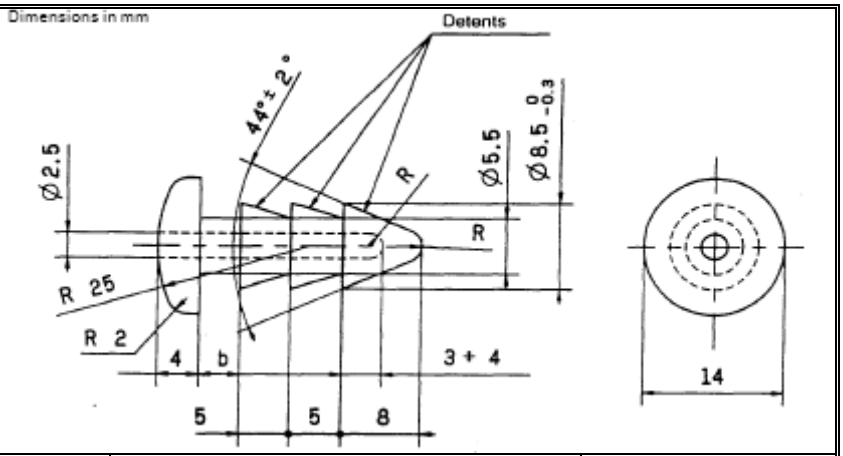

Part Number	Description	b	Number of Detents	Finish
14623980	STUD, 5.5 X 2.5X1	2.5	1	BLK
14567080	STUD, 5.5 X 4 X 1	4	1	BLK

Fiat 12753 Stud Fasteners	Material: 55232	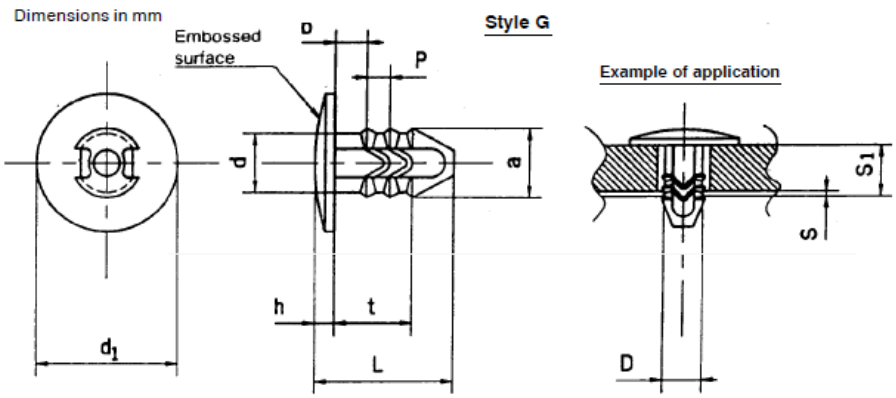

Part Number	a	b	d	d_1	h	t	P	L	D	S	S_1	Color
14592587	7.5	3.5	6.5	15	2	8.5	2.5	15	6.5	0.7 – 1.5	3 - 8	BLK

Fiat 12753 Stud Fasteners	Material: 55246,55250,55232	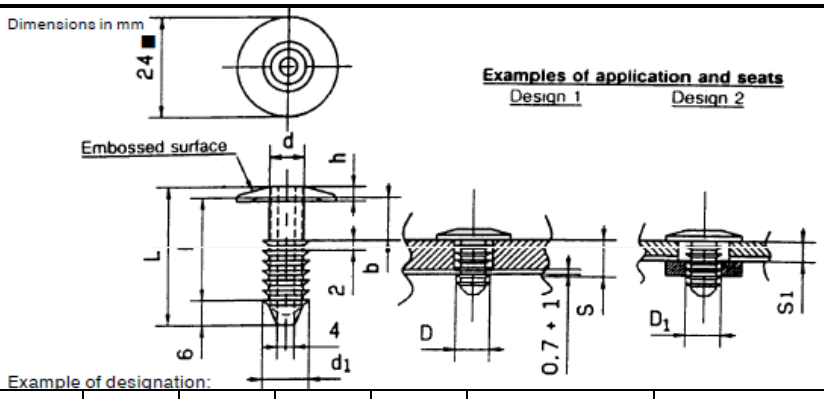

Part Number	Description	b	d	h	l	L	Color	
14568887	STUD, 8 X 20	6	8	4	20	29	BLK	

Fiat 12753/41 Blank Plugs	Material: M80-70 Rubber 55272 Black	STYLE A/1 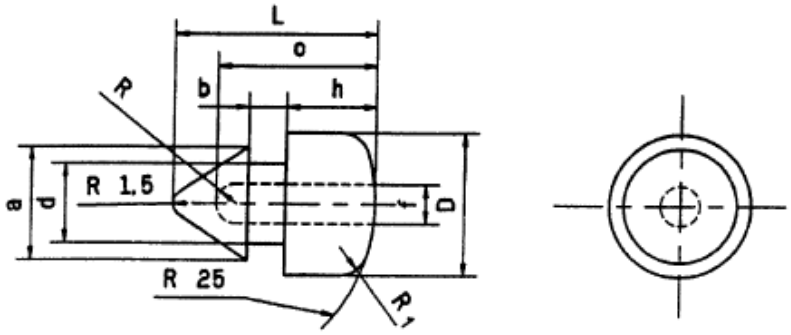

Part Number	Description	a	b	c	d	f	h	D	L	R1
14624887	Plug, Dia 5.5 x 2.5	8.5	2.5	10.5	5.5	2.5	4	14	14.5	2
14624787	Plug, Dia 5.5 x 3.5	8.5	3.5	22.5	5.5	2.5	15	14	26.5	2
14624587	Plug, Dia 6.3 x 3	9.5	3	13	6.3	3.5	7	12	18	1.5

Fiat 12753/41 Blank Plugs	Material: VC 70 Vinyl plastic --- 55251 Black	Dimensions in mm STYLE F 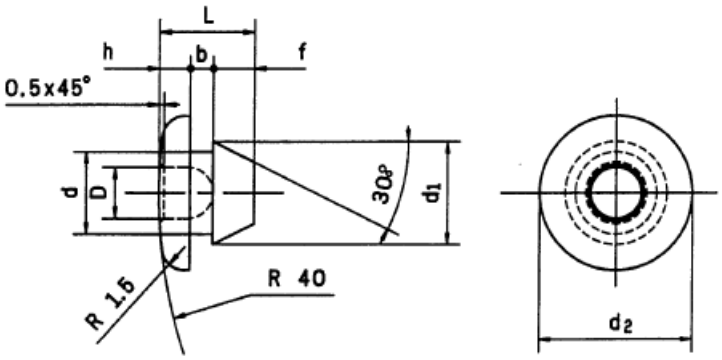

Part Number	Description	D	b	d	d_1	f	h	d_2	L
14621987	Plug, 8X1.8	-	1.8	10	8	1.7	1.5	15	5

Fiat 12753/41 Blank Plugs	Material: M80-60 Rubber 55272 Black	STYLE F/1							
Part Number	Description	a	b	e	d	f	h	D	L
14621787	Plug, Dia 6.5 x 1.2	9	1.2	3	6.5	8	4	14	13.2

Fiat 12753/41 Blank Plugs	Material: Rubber Black TA 10--45÷50 Fiat 55296								
Part Number	Description	a	b	c	d	f	h	D	L
47788290	Plug, 15 x 1 style D Rub blk	20	1	7	15	3	2.5	24	6
14623387	Plug, 16 x 3 style D Rub blk	25	3	10	16	3	3	30	12

Fiat 12753/43 Body Shell Hole Blanking Plugs

Material: Rubber 55297 Black

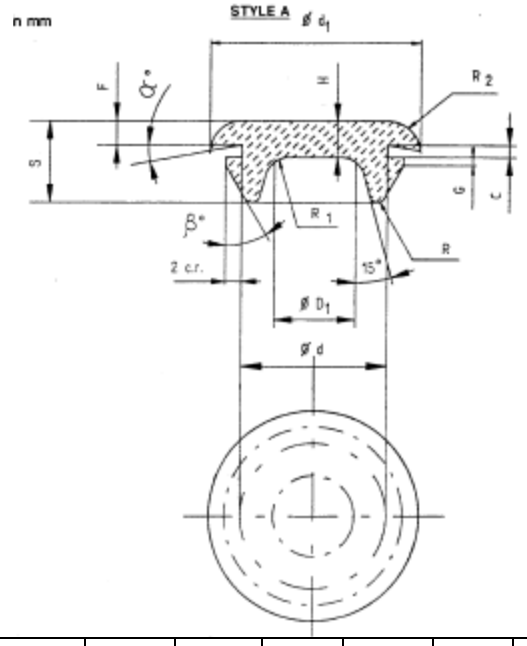

Part Number	Description	d	d1	D1	F	S	G	C	H	R1	R2
13141087	Plug, 12.3 x 2.1 style A	12.3	20.3	7	2.5	10	1.5	2.1	3.5	1.5	3
13141187	Plug, 18 x 2 style A	18	26	10	3	10	1	2	4.5	3	4
13141287	Plug, 18 x 1.5 style A	18	26	10	3	10	1	1.5	4.5	3	4
13140987	Plug, 45 x 1 style A	45	53	35	4	11	1	1	5	3	6

Fiat 12791 Grommet Style M

Material : PA 75.100 Polyamide Plastic 55232

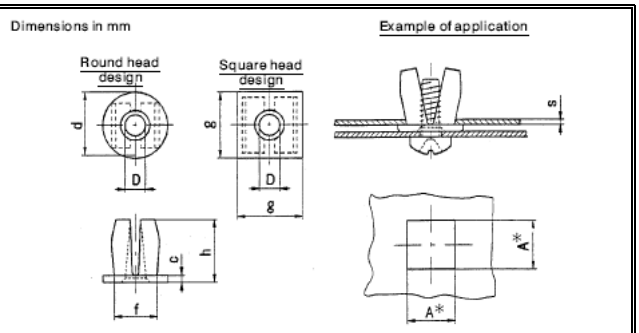

Part Number	Description	f	h	A	D	Color
14115980	Grommet, Style M Tapping Screw 10	7	9	7	3.5	White
14115780	Grommet, Style M Tapping Screw 8	7	9.2	7	3.0	White

Fiat 12794 Style A (for metric screws) Caged Nuts Assembly.
Color can be applied to either the cage or nut.
Cage Material: Stainless Steel Per Fiat 52770 or Steel Per 52554 with phosphate coating per Fiat 9.57408

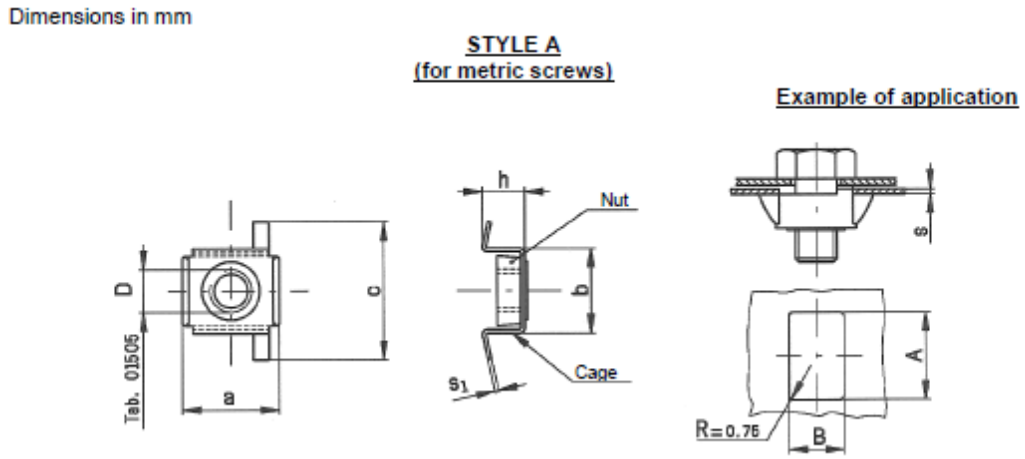

Part Number	D	a +0.1 -0.3	b ±0.1	c ±0.8	h ±0.2	s_1 +0.05 -0.1	s	A +0.2 0	B +0.12 0	Color	Nut Mat'l	Nut Finish
14649390	M8	17.5	16	26	8.6	0.6	1.5 to 1.6	16.5	10.5	Light Green	R50	ZND
14649590	M8	17.5	16	26	9.1	0.6	2.0 to 2.1	16.5	10.5	Yellow	R50	ZND

Fiat 12794 Caged Nuts Style B (for metric screws)

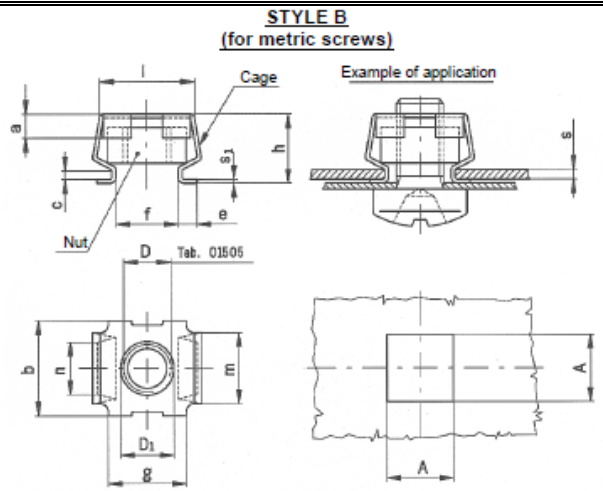

Part Number	D	b	n	e	g	D1	A	l	m	Mat'l	Finish
14197790	M4	10.5	4.8	2	8	6	6.75	9.5	6.5	SST	PLN
14197791	M4	10.5	4.8	2	8	6	6.75	9.5	6.5	STL	ZND
14197890	M5	10.5	4.8	2	8	6	6.75	9.5	6.5	SST	PLN
14197891	M5	10.5	4.8	2	8	6	6.75	9.5	6.5	STL	ZND
14197894	M5	10.5	4.8	2	8	6	6.75	9.5	6.5	STL	DAC

Fiat 12794
Caged Nuts Style B/1 (for Metric Screws)

Cage: Stainless Steek oer Fiat 52770

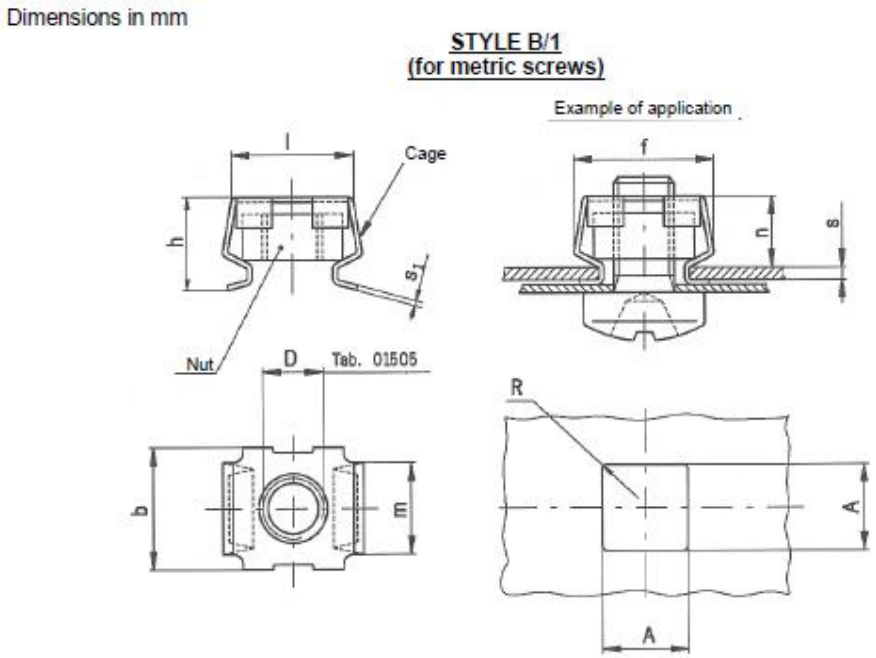

Part Number	D	b ±0.3	f ±0.3	h ±0.3	l ±0.3	m ±0.2	s_1	n	R	Nut	Mat'l	Finish
14074790	M6	13	13.7	10	12.7	8.5	0.5	6.5	1	11X4.8	STL	BLO

Fiat 12794
Caged Nuts Style C (for Metric Screws)

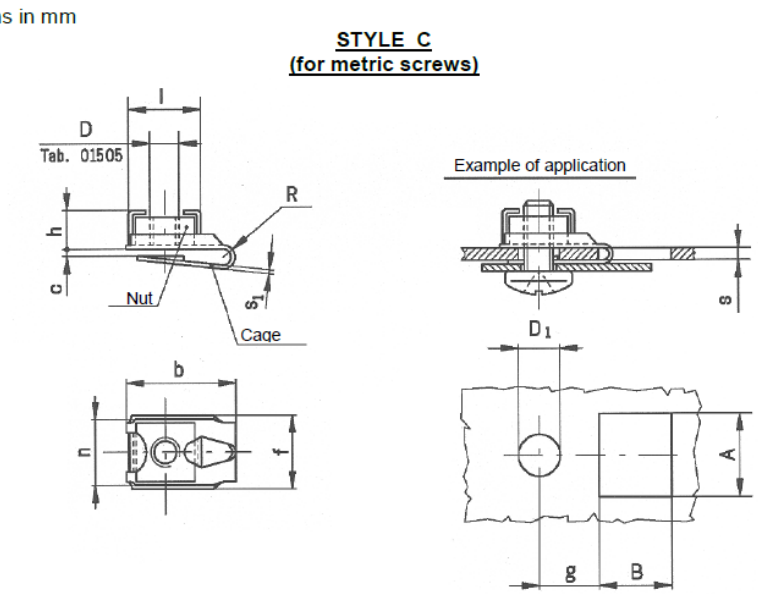

Part Number	D	b	f	c	h ±0.3	l	n	R	s_1	D_1	s	g	A	B	Mat'l	Finish
90423840	M4	13	13	0.6	6.4	9.5	9	1.2	0.6	6	1 to 2.4	7 to 7.5	15	12	STL	PLN

Fiat 12794
Caged Nuts Style C/1 (for Metric Screws)

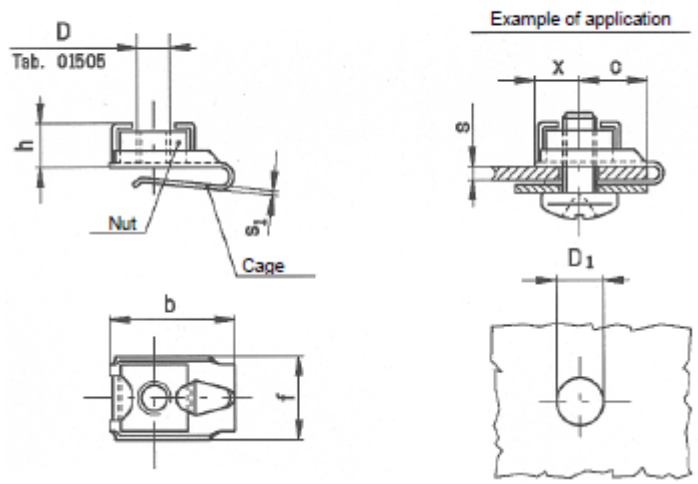

Part Number	D	b ±0.3	f ±0.3	h ±0.3	x	c Max.	s_1	D_1	s	Mat'l	Finish
14193290	M8	22.7	15.3	8.3	7.8	12.7	1.0	9	1.1 – 2.0	STL	BLO
14193390	M8	22.6	15.3	8.3	7.8	11.8	1.0	9	3.1 – 4.0	STL	BLO

UNCONTROLLED COPY When Printed

Fiat 13106/01 Tie-Rod Ends for Yokes Part 1 Type A (Type B listed below)

Material Fiat 52605/01 R50

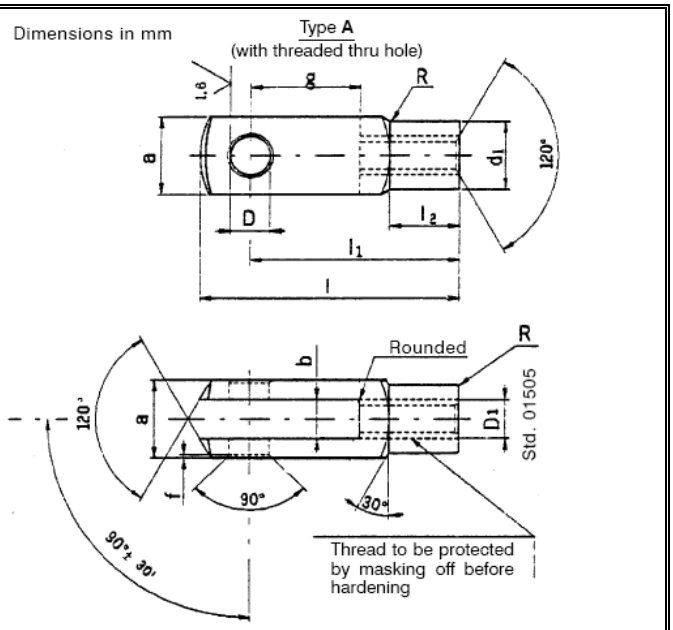

Part Number	Description	D	l	D1	b	d1	Matl	Finish
10007771	Tie Rod End Yoke Type A 6x12 R50IND ZNM	6	31	M6	6	10	R50 IND	ZNM
10001071	Tie Rod End Yoke Type A 6x16 R50 IND ZNM	6	42	M6	6	10	R50 IND	ZNM
10007811	Tie Rod End Yoke Type A 8x16 R50 ZND	8	42	M8	8	14	R50	ZND
10007871	Tie Rod End Yoke Type A 8x16 R50IND ZNM	8	42	M8	8	14	R50 IND	ZNM
10248271	Tie Rod End Yoke Type A 8x16 R50IND ZNM	8	52	M8	8	14	R50 IND	ZNM
11991971	Tie Rod End Yoke Type A 8x16 R50 ZNM	8	42	M8 (LH)	8	14	R50	ZNM
10248471	Tie Rod End Yoke Type A 12 x 36 R50 ZNM	12	84	M12x1.5	12	20	R50	ZNM
10248671	Tie Rod End Yoke Type A 16 x 48 R50 ZNM	16	109	M16x1.5	16	26	R50	ZNM
11992671	Tie Rod End Yoke Type A 16 x 48 R50 ZNM	16	109	M16x1.5 (LH)	16	26	R50	ZNM

LH – Left Hand

Fiat 13106/01 Tie-Rod Ends for Yokes Part 1 Type B (Type A listed above)	Material Fiat 52605/01 R50	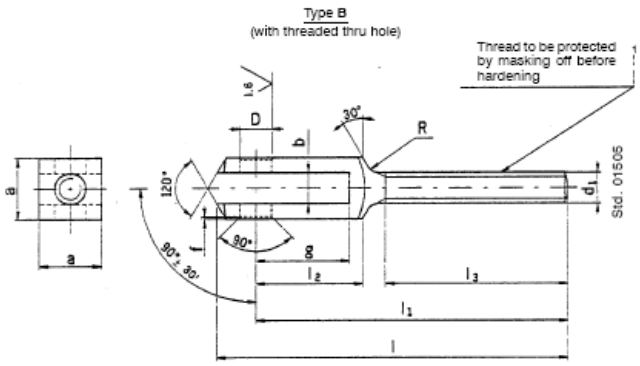

Part Number	Description	D	l	l3	d1	g	Mat	Fin
10008971	Tie Rod End Type B 8 X 16 R50IND ZNM	8	90	46	M8	24	R50IND	ZNM
10008974	Tie Rod End Type B 8 X 16 R50IND DAC	8	90	46	M8	24	R50IND	DAC
11990771	Tie Rod End Type B 8 X 16 R50IND ZNM	8	90	46	M8 (LH)	24	R50IND	ZNM
11990774	Tie Rod End Type B 8 X 16 R50IND DAC	8	90	46	M8 (LH)	24	R50IND	DAC
10008571	Tie Rod End Type B 10X30 R50IND ZNM	10	107	52	M10x1.25	30	R50IND	ZNM
10008574	Tie Rod End Type B 10X30 R50IND DAC	10	107	52	M10x1.25	30	R50IND	DAC

LH – Left Hand

Fiat 13106/01 Tie-Rod Ends for Yokes Part 2 Type C	Material Fiat 52605/02 R50 IND	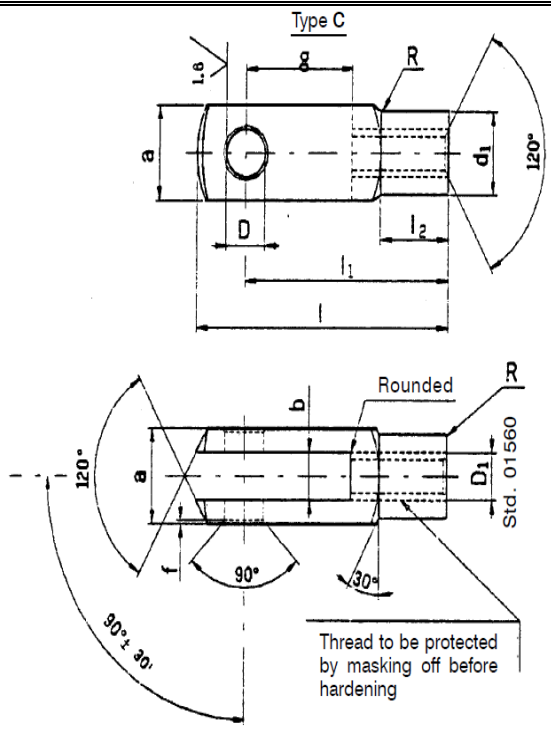

Part Number	Description	D	l	l1	D1	g	Mat	Fin
10008371	Tie Rod End Type B 10 X 20 R50IND ZNM Left Hand Thd	10	62	50	M10((LH)	30	R50IND	ZNM
10248371	Tie Rod End Type B 10 X 20 R50IND ZNM	10	62	50	M10	24	R50IND	ZNM

LH – Left Hand

Fiat 13106/02 R50 Material (Fiat 52605/01)

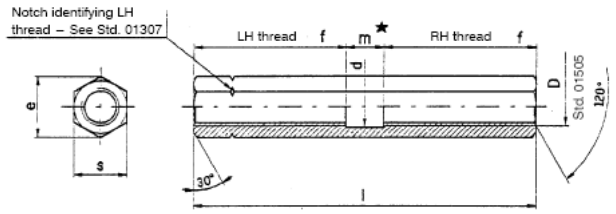

Part Number	Description	D	f	l	s	Mat	Fin
10091011	NUT, TIE ROD ADJ, M6 X 70	M6	32.5	70	10	R50	ZND
10092511	NUT, TIE ROD ADJ, M8 X 80	M8	35	80	12	R50	ZND
10090811	NUT, TIE ROD ADJ, M10X1.25 X 90	M10X1.25	40	90	14	R50	ZND
10092611	NUT, TIE ROD ADJ, M12X1.5 X 100	M12X1.5	45	100	17	R50	ZND
10092614	NUT, TIE ROD ADJ, M12X1.5 X 100	M12X1.5	45	100	17	R50	DAC

Fiat
13106/03
Tie Rod
End Clevis
Joint Pins

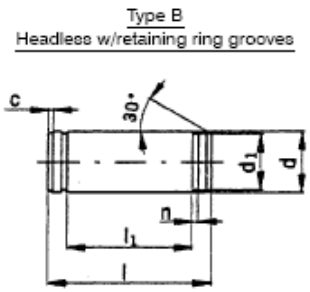

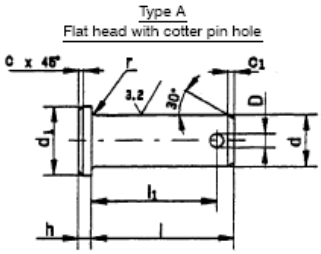

Part Number	Description	l	l1	d	c	h		Mat	Fin
10040711	PIN, HEADED 8 X 18Type A	18	15	8	0.5	2		R50 IND	ZND
10249270	PIN, HEADLESS TYPE B 8 X 22 Style B	22	16.5	8	0.5			12NC3	PLN

Fiat 13130/01 Tie Rod Ball and Socket Joint Heads Light Duty	Material Fiat R40IND or R50IND	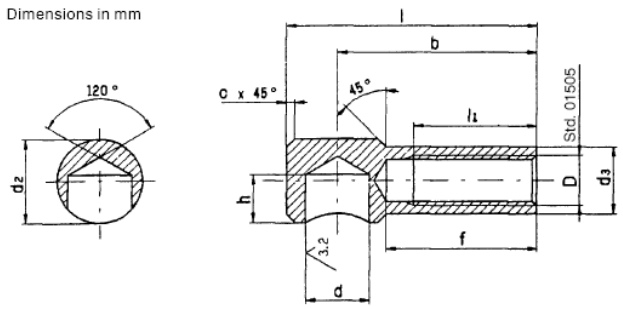					
Part Number	Description	Style	Dia D	Length l	d	Matl	Finish
10124311	ROD END, M5X32 TYPE SOCKET LITE STL ZND	socket	5	32	8	R40IND/R50IND	ZND
10124410	ROD END, M10X37 TYPE SOCKET LITE STL PLN	socket	6	37	10	R40IND/R50IND	PLN
10124411	ROD END, M10X37 TYPE SOCKET LITE STL ZND	socket	6	37	10	R40IND/R50IND	ZND
10124511	ROD END, M13X45 TYPE SOCKET LITE STL ZND	socket	8	45	13	R40IND/R50IND	ZND
10124514	ROD END, M13X45 TYPE SOCKET LITE STL DAC	socket	8	45	13	R40IND/R50IND	DAC
10124517	ROD END, M13X45 TYPE SOCKET LITE STL BZN	socket	8	45	13	R40IND/R50IND	BZN
10124611	ROD END, M15X59 TYPE SOCKET LITE STL ZND	socket	10	59	15	R40IND/R50IND	ZND

Fiat 13130/02 Upsetting Ball Studs for Tie Rod Ball and Socket Joints	Material Fiat R40	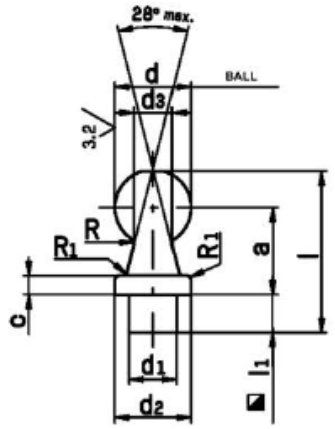				
Part Number	Description	TYPE	Dia d	Length l	Matl	Finish
10051510	STUD, BALL, UPSETTING, SIZE 8 R50 PLN	Upset	8	16.5	R50 IND	PLN
10051600	STUD, BALL, UPSETTING, SIZE 10 R40 PLN	Upset	10	20	R40 IND	PLN
10051610	STUD, BALL, UPSETTING, SIZE 10 R50 PLN	Upset	10	20	R50 IND	PLN
10051611	STUD, BALL, UPSETTING, SIZE 10 R50 ZND	Upset	10	20	R50 IND	ZND
Cont'd see next page						

Fiat 13130/02 Cont'd						
10051614	STUD, BALL, UPSETTING, SIZE 10 R50 DAC	Upset	10	20	R50 IND	DAC
10051710	STUD, BALL, UPSETTING, SIZE 13 R50 PLN	Upset	13	23.5	R50 IND	PLN
10051711	STUD, BALL, UPSETTING, SIZE 13 R50 ZND	Upset	13	23.5	R50 IND	ZND
10051714	STUD, BALL, UPSETTING, SIZE 13 R50 DAC	Upset	13	23.5	R50 IND	DAC
10051810	STUD, BALL, UPSETTING, SIZE 15 R50 PLN	Upset	15	26.5	R50 IND	PLN
10051814	STUD, BALL, UPSETTING, SIZE 15 R50 DAC	Upset	15	26.5	R50 IND	DAC
10063400	STUD, BALL, UPSETTING SIZE 8 20L R40 PLN	Upset	8	20	R40 IND	PLN
10063414	STUD, BALL, UPSETTING SIZE 8 20L R50 DAC	Upset	8	20	R50 IND	DAC
10063510	STUD, BALL, UPSET SIZE 10 23.5L R50 PLN	Upset	10	23.5	R50 IND	PLN
10063514	STUD, BALL, UPSET SIZE 10 23.5L R50 DAC	Upset	10	23.5	R50 IND	DAC
10063610	STUD, BALL, UPSET SIZE 13 28.5L R50 PLN	Upset	13	28.5	R50 IND	PLN
10063611	STUD, BALL, UPSET SIZE 13 28.5L R50 ZND	Upset	13	28.5	R50 IND	ZND
10063614	STUD, BALL, UPSET SIZE 13 28.5L R50 DAC	Upset	13	28.5	R50 IND	DAC
10063710	STUD, BALL, UPSET SIZE 15 33.5L R50 PLN	Upset	15	33.5	R50 IND	PLN
10063714	STUD, BALL, UPSET SIZE 15 33.5L R50 DAC	Upset	15	33.5	R50 IND	DAC

Fiat 13130/03 Spring Lock

Material Fiat Steel C72

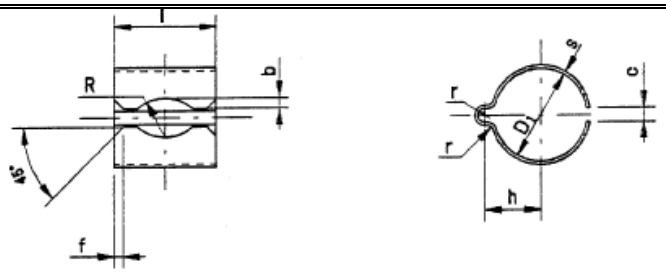

Part Number	Description	TYPE	Ball dia	Length l			Matl	Finish
10124774	SPRING LOCK 8X15 STL DAC	lock	8	15			STL	DAC
10124873	SPRING LOCK10X15 STL PHC	lock	10	15			STL	PHC
10124874	SPRING LOCK10X15 STL DAC	lock	10	15			STL	DAC
10124876	SPRING LOCK10X15 STL BLO	lock	10	15			STL	BLO
10125574	SPRING LOCK 13X15 STL DAC	lock	13	15			STL	DAC
10125674	SPRING LOCK 15 X 22 STL DAC	lock	15	22			STL	DAC

Fiat 13140
Tie-Rod Ball and Socket Joints Heavy Duty

Dimensions in mm

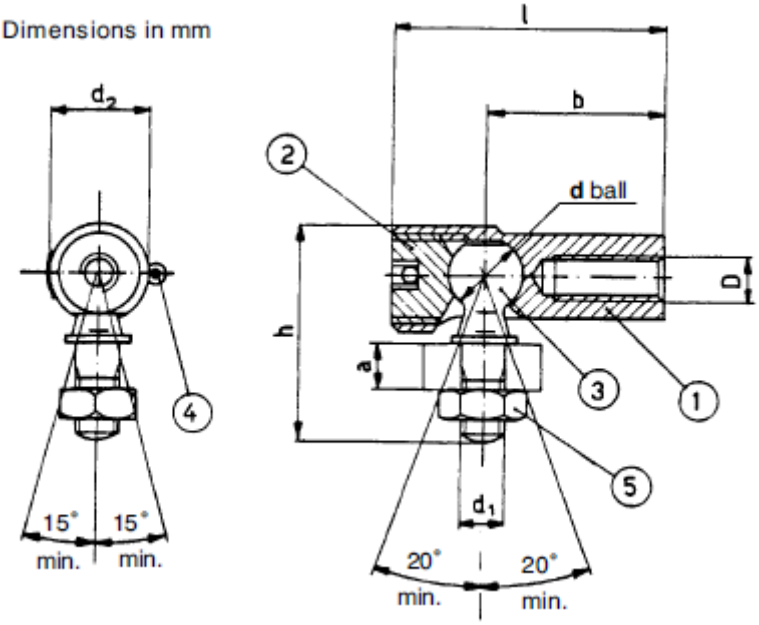

Ball dia. d	Tie–rod diameter D 6H		d_1 6H/6g	d_2 ~	a ~	b	l ~	h ~
8	M5	–	M5	13	5	20	31	26.5
10	M6	–	M6	15	6	26	40	31.5
13	M8	M8 Sin	M8	19	8	32	50	38.5
15	M10x 1.25	M10x 1.25 Sin	M10x 1.25	22	10	39	60	46
16	M10x 1.25	–	M10x 1.25	22	10	35	52	47

Ball dia. d	Components						
	1		2	3	4	5	
	Socket with R.H. L.H. thread Std. Sh. 13140/01		Plug Std. Sh. 13140/02	Ball stud Std. Sh. 13140/03	Cotter pin Std. Sh. 10195	nut Std. Sh.	
						10112	10114
8	51499	–	51509	51519	07951	1/58964/11	–
10	51500	–	51510	51520	07344	–	1/07259/11
13	51501	51504	51511	51521	07346	–	1/61023/11
15	51502	51503	51512	51522	07347	–	1/07910/11
16	51507	–	51513	51523	07347	–	1/07910/11

Part Number	Ball Dia d	Threads
15152690	13	Right Hand (R.H.)

Fiat 13140/03 Threaded Ball Studs for Rod Joint Sockets

Material Fiat R50 IND

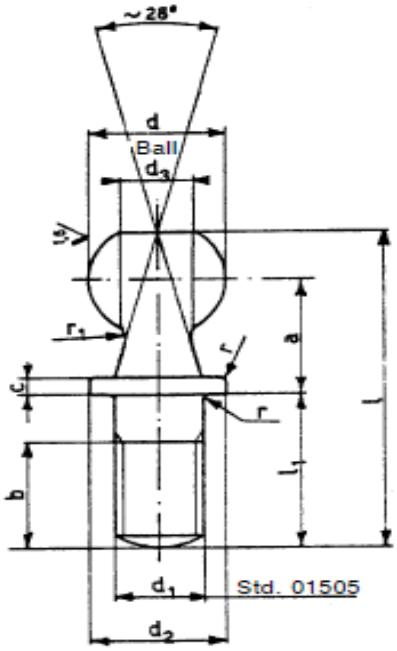

Part Number	Description	Stud Dia.	Ball dia	L	L1	Matl	Fin
15151911	STUD, BALL, M5X11 8 MM BALL	M5	8	23.5	11	R50 IND	ZND
15152011	STUD, BALL, M6X13 10MM BALL	M6	10	28.5	13	R50 IND	ZND
15152017	STUD, BALL, M6X13 10MM BALL	M6	10	28.5	13	R50 IND	BZN
15152117	STUD, BALL, M8X16 13MM BALL	M8	13	35	16	R50 IND	BZN
15152211	STUD, BALL, M10X1.25X20 15MM BALL	M10X1.5	15	41.5	20	R50 IND	ZND

Fiat 14140/41 Hexagonal-head screw hose clamps

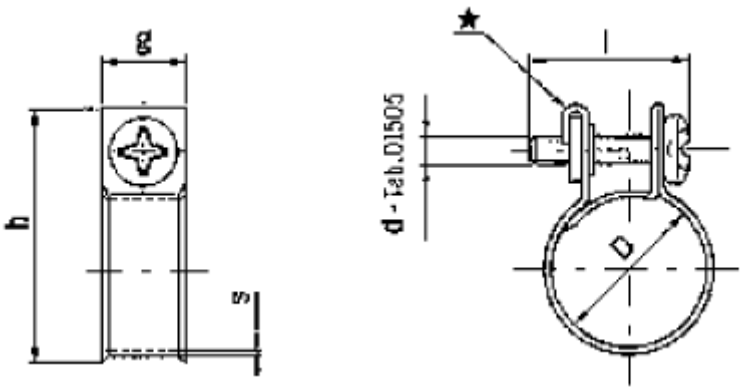

Part Number	D	Supply dia	Min. Fitting Dia *	g +/-0.5	h +/-1	d	l	s +/- 0.5	Color
10175990	9-11	11.1	8.8	9	20	M4	22	0.6	Green
47747031	10-12	12.2	9.7	9	21	M4	22	0.6	Yellow
47564925	11-13	13.2	10.7	9	22	M4	22	0.6	Green
47564927	12-14	14.2	11.6	9	23	M4	22	0.6	White

Fiat 14140/42	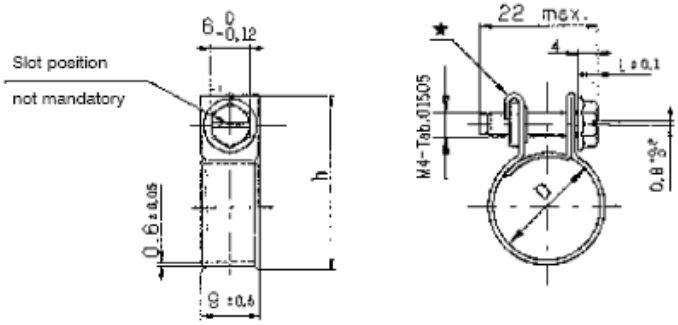					
Part Number	Description	D	Supply Dia	Min Installed dia	h	color
10186190	CLAMP, M8-10X9 SQ NUT AND BOLT STL YLW	8-10	10.1	7.8	19	yellow
10186490	CLAMP, M10-12X9 SQ NUT AND BOLT STL YL	10-12	12.2	9.7	21	yellow
10186590	CLAMP, M11-13X9 SQ NUT AND BOLT STL GR	11-13	13.2	10.7	22	green
47564888	CLAMP, M12-14X9 SQ NUT AND BOLT STL WH	12-14	14.2	11.6	23	white
10186790	CLAMP, M13-15 X 9 SQ NUT AND BOLT STL YL	13-15	15.2	12.6	24	yellow
10186890	CLAMP, M14-16X9 SQ NUT AND BOLT STL GR	14-16	16.2	13.6	25	green
10186990	CLAMP, M15-17X9 SQ NUT AND BOLT STL WH	15-17	17.2	14.6	26	white
10187090	CLAMP, M16-18 X 9 SQ NUT AND BOLT STL YL	16-18	18.2	15.5	27	yellow

Fiat 14146	Self-TIghtening Hose Clamps Steel 52556	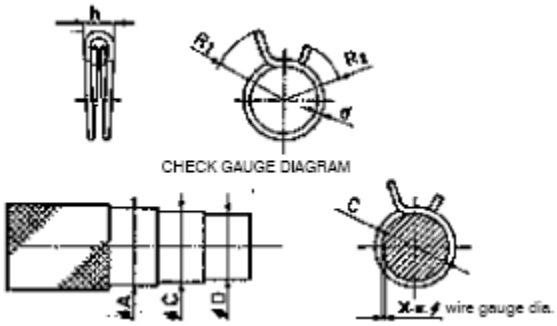						
Part Number	Description	Min	Max	Color	h			
13422971	Clamp, 9.9 – 11.1	9.9	11.1	Yellow	6			
13423177	Clamp, 11.5 – 12.7	11.5	12.7	Black	7			
13423271	Clamp, 12.1 – 13.5	12.1	13.5	Yellow	7			
13423370	Clamp, 13.6 – 15.1	13.6	15.1	White	7			
13423371	Clamp, 13.6 – 15.1	13.6	15.1	Yellow	7			
13423377	Clamp, 13.6 – 15.1	13.6	15.1	Black	7			
13423470	Clamp, 14.8 – 16.4	14.8	16.4	White	8			
13423577	Clamp, 16.5 – 18.3	16.5	18.3	Black	8			
13423670	Clamp, 17.7 – 19.3	17.7	19.3	White	9.2			
13423770	Clamp, 20.6 – 22.9	20.6	22.9	White	10.3			
13423777	Clamp, 20.6 – 22.9	20.6	22.9	Black	10.3			
13425577	Clamp, 34.4 – 37.3	34.4	37.3	Black	14			

Fiat 14150
Style B
Snap-on Hose
Band Clamps
Stainless steel
– 52770 or
UNI 6901
X5 CrNi 1810
(HRB<104)
or
X12 CrNi 1707
(HRB<104)

Dimensions in mm

DESIGN SOLUTION FOR NOM. DIA. 7 to 23.5
(intended for water, oil, fuel and air systems)

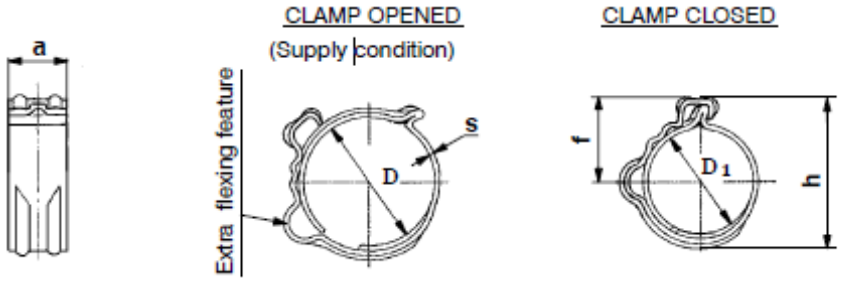

Part Number	Description	Nominal Clamping Dia	D	a	S	f	h	Color
47731453	Clamp, Snap-on 10.0/12.5 SST PLN	10	12.5	6	0.6	12.3	17.5	White
47729678	Clamp, Snap-on 10.5/13.0 SST PLN	10.5	13.0	6	0.6	12.5	18.0	Yellow
90460861	Clamp, Snap-on 11.5/14.5 SST PLN	11.5	14.5	9	0.6	13.35	20.8	Purple
90467946	Clamp, Snap-on 13/16.0 SST PLN	13.0	16.0	9	0.6	14.1	22.3	Yellow
47534680	Clamp, Snap-on 14.5/17.5 SST PLN	14.5	17.5	9	0.6	14.85	23.8	Black
47534773	Clamp, Snap-on 15/18 SST PLN	15	18	9	0.6	15.1	24.3	White
47534775	Clamp, Snap-on 15.5/18.5 SST PLN	15.5	18.5	9	0.6	15.35	24.8	Yellow
47935342	Clamp, Snap-on 16.5/19.5 SST PLN	16.5	19.5	9	0.6	15.85	25.8	Purple
90489216	Clamp, Snap-on 21.5/24.5 SST PLN	21.5	24.5	9	0.6	18.35	30.8	Purple
90489202	Clamp, Snap-on 22.5/25.5 SST PLN	22.5	25.5	9	0.6	18.85	31.8	White
90489190	Clamp, Snap-on 23/26 SST PLN	23	26	9	0.6	19.1	32.3	Yellow

Fiat 14150 Style B Snap-on Hose Band Clamps

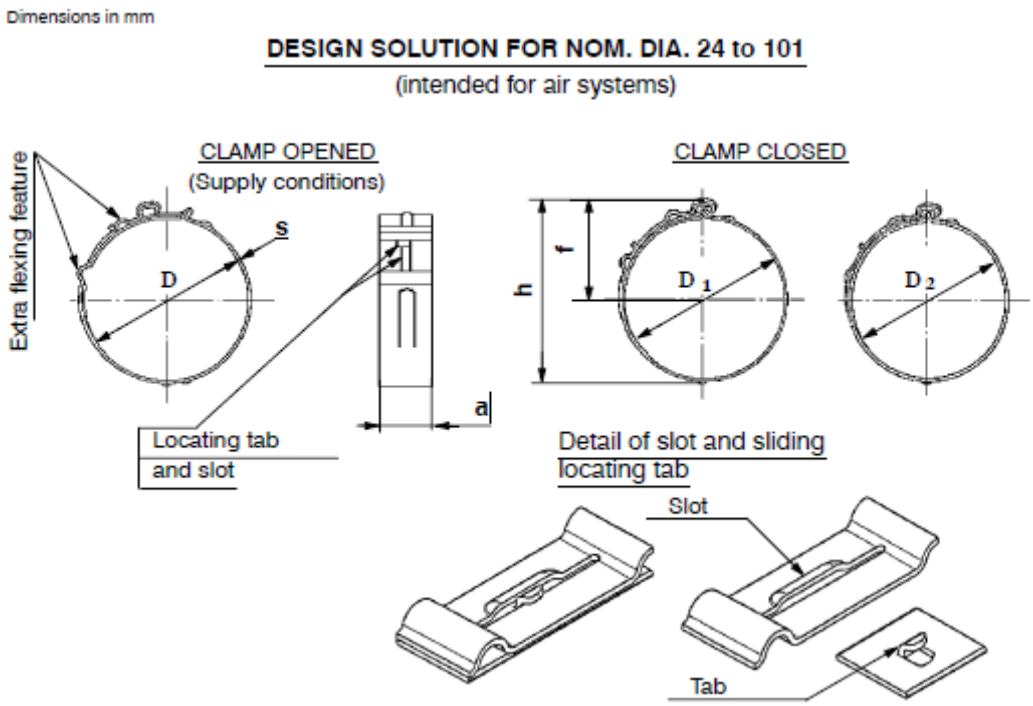

Part Number	Description	Nominal Clamping Dia	D	a	S	f	h	Color
13127670	Clamp, Snap-on 24/27 SST PLN	24	27	9	0.6	19	31.6	Purple
90489219	Clamp, Snap-on 27.5/31 SST PLN	27.5	31	9	0.6	20.6	35.1	White
90489223	Clamp, Snap-on 28.5/32 SST PLN	28.5	32	9	0.6	21.3	36.1	Green
47717293	Clamp, Snap-on 31.5/35 SST PLN	31.5	35	9	0.6	22.8	39.1	Violet

Fiat 14151 Double Ratchet Lock Elastic Hose Clamps Fiat Spec 9.14620/02

TYPE "A" with cap

(To be used in particular applications concerning installation/lay – out safety of engine well)

Dimensions in mm

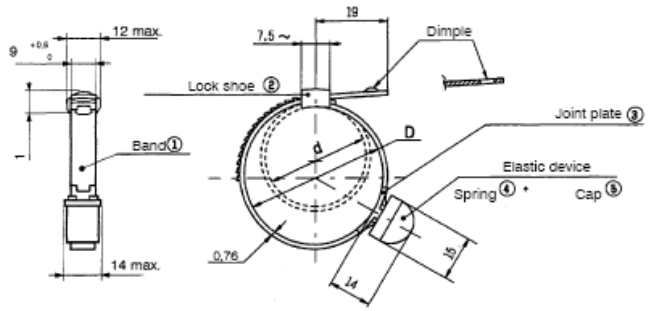

TYPE "B" without cap

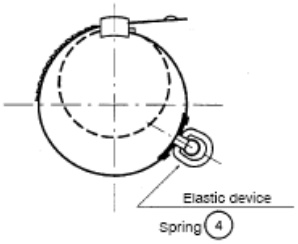

Part Number	Description	Nom Dia	D	d	Clamping Range
13097490	Clamp, 43mmType B DBL Elastic	43	46.5	37	45 to 39
13097770	Clamp, 58mmType A DBL Elastic	58	61.5	52	60 to 54
13097870	Clamp, 65mmType A DBL Elastic	65	66.5	57	65 to 59
13097970	Clamp, 70mmType A DBL Elastic	70	71.5	62	70 to 64
13098070	Clamp, 75mmType A DBL Elastic	75	76.5	67	75 to 69

Fiat 14221 Sleeve Tube Fitting Nuts

Type A

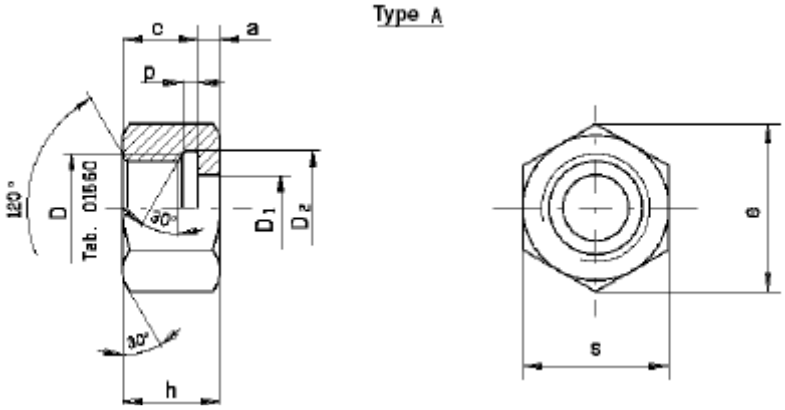

Part Number	Description	D	D1	a	c	h	p	D2	s	Mat/Fin
10191310	Nut, M16x1.5 Tube	M16X1.5	10.2	3	12	15	3	16.5	22	R50 PLN
10191511	Nut, M22x1.5 Tube	M22x1.5	14.2	4	14	18	3	22.5	27	R50 ZND

Fiat 14222	Sleeves - Tube Fitting Sleeves	Type A 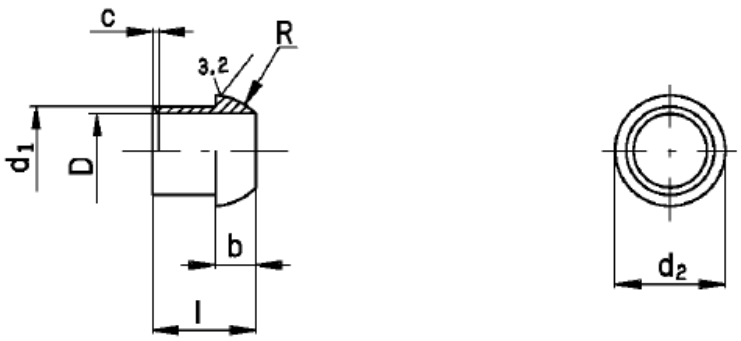

Part Number	D		d_1		d_2	b	l	R	c	Material	Finish
10189719	6	+0.145 +0.070	8	0 -0.090	11	5.5	14	8	0.75	R50	ZND
10189800	8	+0.170 +0.080	10	0 -0.090	13	5.5	14	8	0.75	R50	PLN
10189819	8	+0.170 +0.080	10	0 -0.090	13	5.5	14	8	0.75	R50	ZND
10190015	12	+0.205 +0.090	14	0 -0.110	17	5.5	14	8	0.75	R50	ZND

Fiat 14256 One-Way Pipe Banjo Fittings Union Screws

Material Fiat 52605/01

Steel

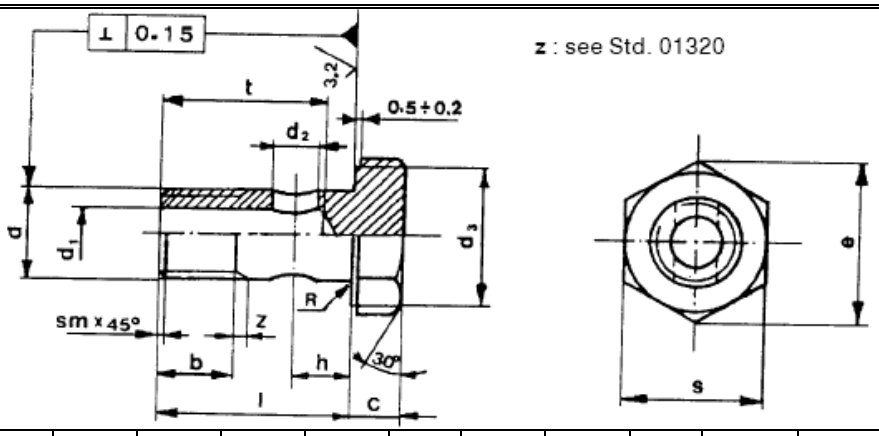

Part Number	d	d_1	d_2	l	c	h	b	t	R	sm	s	e	Matl	Fin
11904011	M8X1	4	2.5	16	5	4	7.5	14	0.2	1.25	13	14.38	R50	ZND
11903711	M8X1.25	4	2.5	16	5	4	7.5	14	0.2	1.25	13	14.38	R50	ZND
11904111	M10x1	5	3	19	5	4.5	9	16	0.2	1.25	13	14.38	R50	ZND
11903814	M10x1.25	5	3	19	5	4.5	9	16	0.2	1.25	13	14.38	R50	DAC
10185011	M12x1.5	6	4	23	6	6	11	19	0.2	1.5	17	18.90	R50	ZND
10185014	M12x1.5	6	4	23	6	6	11	19	0.2	1.5	17	18.90	R50	DAC
*10181711	M12x1.5	6	4	23	6	6	11	19	0.2	1.5	17	18.90	R50	ZND
*10181714	M12x1.5	6	4	23	6	6	11	19	0.2	1.5	17	18.90	R50	DAC
*10181717	M12x1.5	6	4	23	6	6	11	19	0.2	1.5	17	18.90	R50	BZN
*10184314	^M14x1.5	8	5.5	27	7	8	12	22	0.2	1.5	19	21.10	R50	DAC
*10184311	^M14x1.5	8	5.5	27	7	8	12	22	0.2	1.5	19	21.10	R50	ZND
10185111	M14x1.5	8	5.5	27	7	8	12	22	0.2	1.5	19	21.10	R50	ZND
10184411	M16X1.5	10	7.5	31	8	9.5	13	26	0.2	1.5	22	24.49	R50	ZND
10184414	M16X1.5	10	7.5	31	8	9.5	13	26	0.2	1.5	22	24.49	R50	DAC
10184417	M16X1.5	10	7.5	31	8	9.5	13	26	0.2	1.5	22	24.49	R50	BZN
10182614	M20x1.5	13	9.5	36	9	12	14	30	0.2	1.5	27	30.14	R50	DAC

* With close geometric tolerances.

^When it is used in power steering system see P.S. 9.02138/04

Fiat 14256/20 One-Way Pipe Banjo Fittings Union Screws

Material Fiat 52605/01

Steel

Dimensions in mm

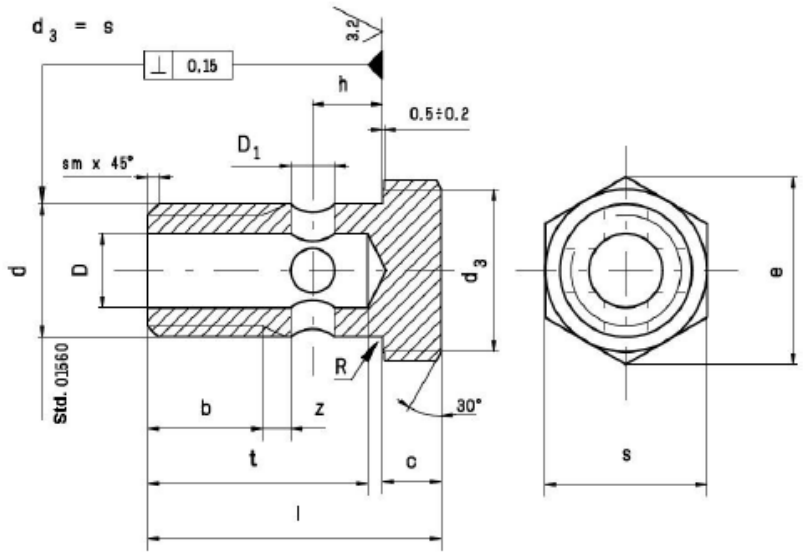

Part Number	D (6g)	D	D_1	l	c	h	b	z max.	t	R	sm	s	e	Matl	Fin
10181911	M18x1.5	10	6	40	8	9.5	16	3.8	30	0.2	1.5	22	24.69	R50	ZND

Fiat 14261 Metal pipe banjo fitting	Material Fiat 52605/01 Steel	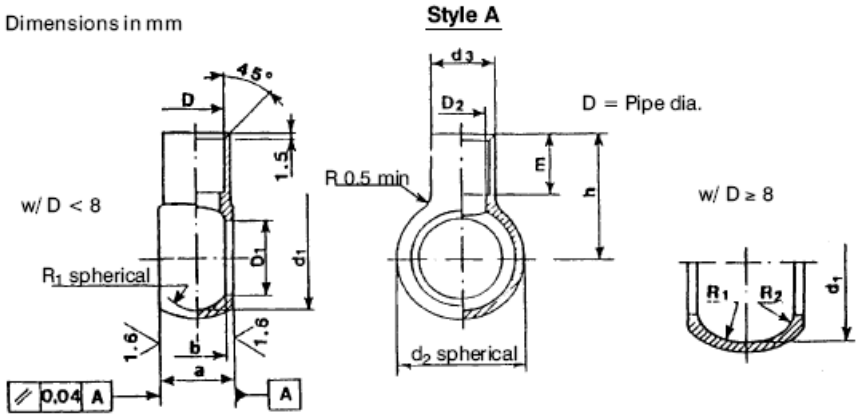

Part Number	Description	D Nom Pipe	D2	m	d1	d2	D1	a	b	h	Matl	Fin
10072800	Fitting, Banjo 4.76 Style A R40 PLN	4.76	3.5	8	11	14	8	8	5	16	R40	PLN
10072801	Fitting, Banjo 4.76 Style A R40 ZND	4.76	3.5	8	11	14	8	8	5	16	R40	ZND
10071701	Fitting, Banjo 6 STYLE A R40 ZND	6	4	10	14	17	10	10	7	19	R40	ZND
10072900	Fitting, Banjo 6.35 STL A R40 PLN	6.35	5	10	14	17	10	10	7	19	R40	PLN
10072901	Fitting, Banjo 6.35 STL A R40 ZND	6.35	5	10	14	17	10	10	7	19	R40	ZND
10072910	Fitting, Banjo 6.35 STL A R50 PLN	6.35	5	10	14	17	10	10	7	19	R50	PLN
10072940	Fitting, Banjo 6.35 STYLE A BRASS	6.35	5	10	14	17	10	10	7	19	Brs	
10072100	Fitting, Banjo 8 STYLE A R40 PLN	8	6	12	17	20	12	12	9	22	R40	PLN
10072101	Fitting, Banjo 8 STYLE A R40 ZND	8	6	12	17	20	12	12	9	22	R40	ZND
10072111	Fitting, Banjo 8 STYLE A R50 ZND	8	6	12	17	20	12	12	9	22	R50	ZND
10073600	Fitting, Banjo 10 STYLE A R40 PLN	10	8	14	20	24	14	15	12	25	R40	PLN
10073611	Fitting, Banjo 10 STYLE A R50 ZND	10	8	14	20	24	14	15	12	25	R50	ZND
10073601	Fitting, Banjo 10 STYLE A R40 ZND	10	8	14	20	24	14	15	12	25	R40	ZND
10073700	Fitting, Banjo 12 STYLE A R40 PLN	12	10	15	24	28	16	18	15	28	R40	PLN
10073701	Fitting, Banjo 12 STYLE A R40 ZND	12	10	15	24	28	16	18	15	28	R40	ZND
10072301	Fitting, Banjo 22 STYLE A R40 ZND	22	20	18	42	50	28	32	26	40	R40	ZND

Fiat 14262 Two-way Pipe Banjo Fittings Caps	Fiat Material R50	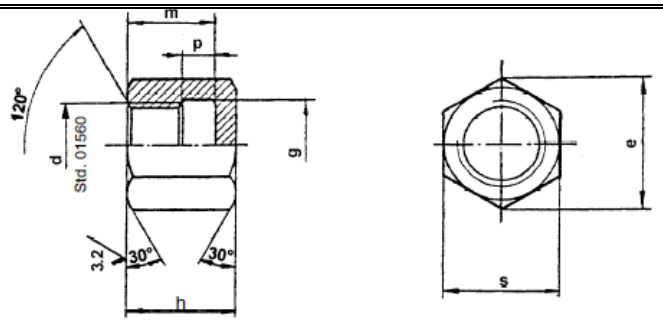

Part Number	Description	h	m	g	p	s	Mat/Fin
11902017	CAP,BANJO M8	11	9	8.5	4	13	R50 ZND
10183217	CAP,BANJO M12X1.5	14	11	12.5	5	17	R50 ZND
10182817	CAP,BANJO M14X1.5	14	11	14.5	5	19	R50 ZND
10184117	CAP,BANJO M20X1.5	16	13	20.5	5	27	R50 ZND
10183717	CAP,BANJO M28X1.5	18	14	28.5	5	36	R50 ZND

Fiat 14265/02 Straight End Fittings Parallel Threaded	Fiat Material AB 40 PR	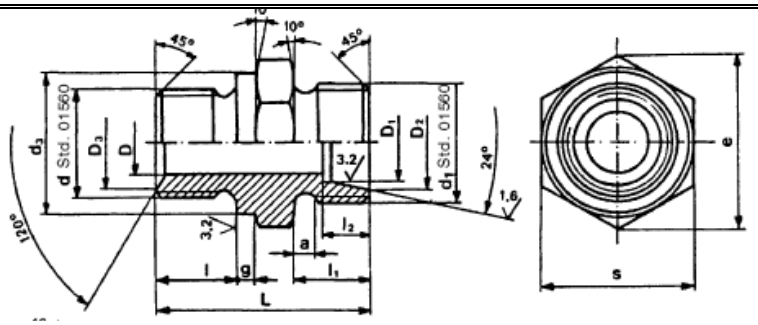				
Part Number	Description	s	e	L	Mat	Fin
11212611	Fitting, str end M16x1.5XM18x1.5	22	25.4	31.5	AB40PR	ZND
11212813	Fitting, str end M18x1.5XM22x1.5	24	27.7	32.5	AB40PR	PHC

Fiat 14267 Original DIN 3870	Tube Nuts	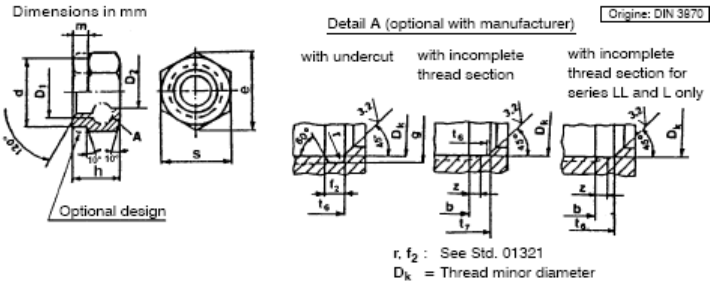					
Part Number	Description	D2-Pipe OD	S	h	d	Mat	Fin
11260111	Nut, M10 X 1	4	12	11	11.8	8	ZND
11260211	Nut, M12 X 1.5	6	14	14.5	13.8	8	ZND
11260311	Nut, M14 X 1.5	8	17	14.5	16.8	8	ZND
11260511	Nut, M16 X 1.5	10	19	15.5	18.8	8	ZND
11260611	Nut, M18 X 1.5	12	22	15.5	21.8	8	ZND
11260711	Nut, M22 X 1.5	15	27	17	26.8	8	ZND
11260713	Nut, M22 X 1.5	15	27	17	26.8	8	PHC
11260811	Nut, M26 X 1.5	18	32	18	31.8	8	ZND
11260911	Nut, M30 X 2	22	36	20	35.8	8	ZND
11261011	Nut, M36 X 2	28	41	21	40.8	8	ZND

Fiat 14268
Original DIN 3861

Ferrules for Fittings

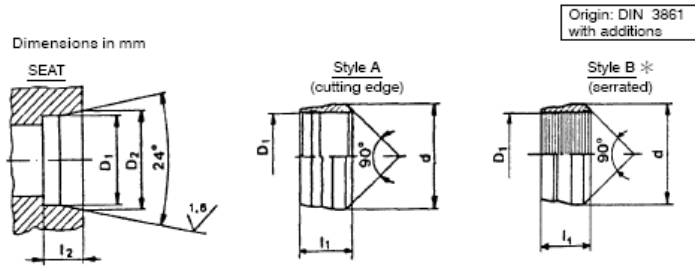

Part Number	Description	D1	d	L1	Material	Finish
11266713	Ferrule for 12mm pipe style A	12	15	10	10S20IND	PHC
11266411	Ferrule for 6mm pipe style A	6	9	9.5	10S20IND	ZND
11264111	Ferrule for 8mm pipe style A	8	11	9.5	10S20IND	ZND
11264113	Ferrule for 8mm pipe style A	8	11	9.5	10S20IND	PHC
11266611	Ferrule for 10mm pipe style A	10	13	10	10S20IND	ZND
11266711	Ferrule for 12mm pipe style A	12	15	10	10S20IND	ZND
11269211	Ferrule for 15mm pipe style B	15	18	10	10S20IND	ZND
11266811	Ferrule for 15mm pipe style A	15	18	10	10S20IND	ZND
11266813	Ferrule for 15mm pipe style A	15	18	10	10S20IND	PHC
11266911	Ferrule for 18mm pipe style A	18	21	10	10S20IND	ZND
11267011	Ferrule for 22mm pipe style A	22	25	10.5	10S20IND	ZND
11267111	Ferrule for 28mm pipe style A	28	31	10.5	10S20IND	ZND

Fiat 14269
Rectangular Sealing Washers for pipe Fittings
Aluminum – Fiat 53207 P-ALP 99.5 LMTF RCT HB ≤ 25
Copper – Fiat 53550 CU 99.5 LMT RCT HB 1/10/15 = 40 to 60
Copper – Fiat 53551 – CU DHP LMT RCT HB 1/10/15 = 40 to 60 (Alternative)

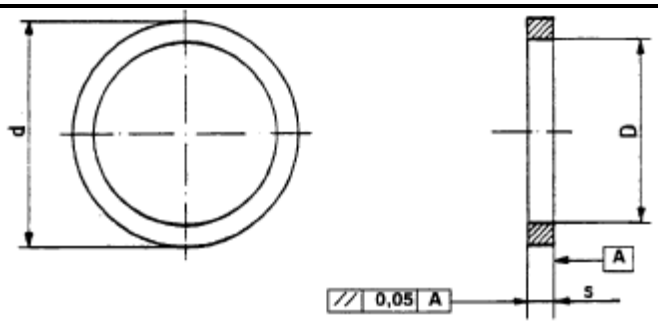

Part Number	Description	d 0 -0.2	D 0 +0.3	s +0.2 0	Material	Finish
11270050	Washer, 10X 13.5	13.4	10.2	1	Aluminum	PLN
11270060	Washer, 10X 13.5	13.4	10.2	1	COPPER	PLN
11270250	Washer, 14X 18	17.9	14.2	1.5	Aluminum	PLN
11270260	Washer, 14X 18	17.9	14.2	1.5	COPPER	PLN
11270160	Washer, 12 x 15.5	15.4	12.2	1.5	COPPER	PLN
11270460	Washer, 17 x 21	20.9	17.2	1.5	COPPER	PLN
11270560	Washer, 18 x 22	21.9	18.2	1.5	COPPER	PLN
11270860	Washer, 22 x 27	26.9	22.2	2	COPPER	PLN
11270960	Washer, 26 x 31	30.9	26.3	2	COPPER	PLN

Fiat 14281 Formed (dual-cone) tube end nuts

Dimensions in mm

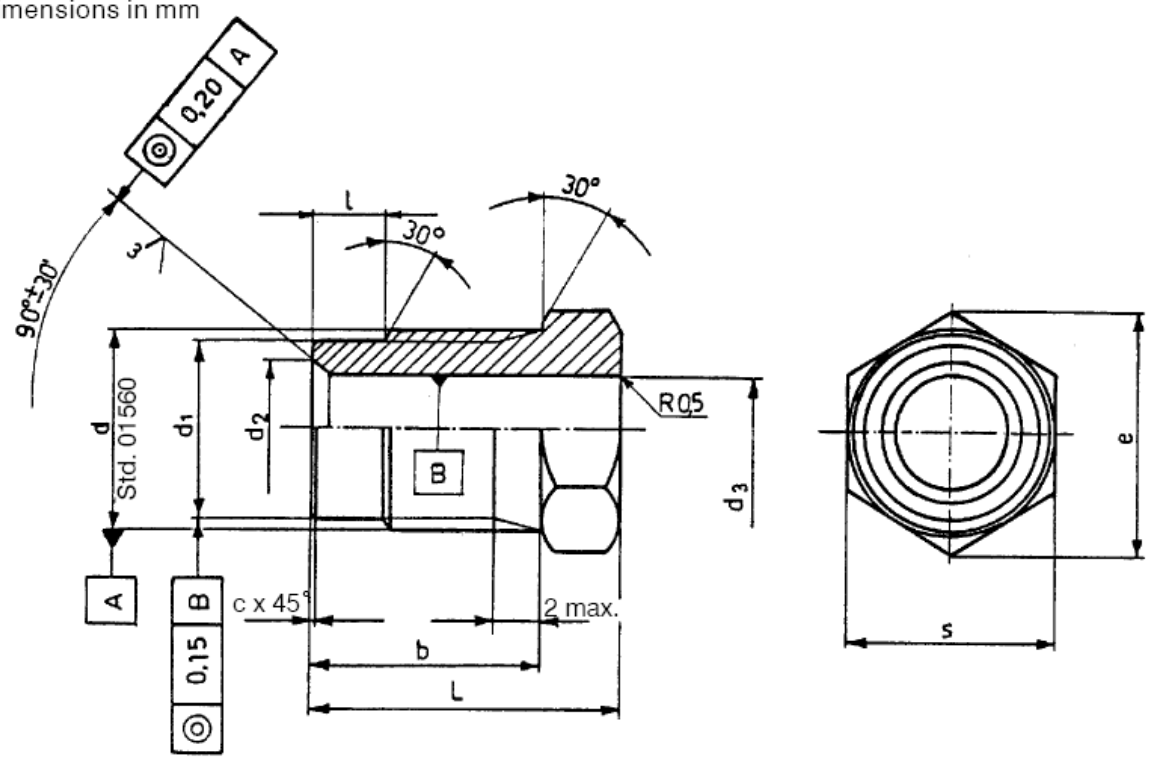

Tube dia. d_4	d 6g	d_1 0 −0.1	d_2 0 −0.3	d_3 nom.	d_3 devtn. limit	L	l +0.3 0	c +0.1 0	b +0.5 0	s h13	s devtn. limit	e min.	Basic Std. Part number
4.76	M10 x 1.25	8.4	6.3	5	+0.18 0	19	4.5	0.5	14	10	0 −0.220	11.05	46890
6.35	M12 x 1.25	10.4	8.3	6.6	+0.15 −0.05	19.5				13	0 −0.270	14.38	46891
	M14 x 1.5	12				20.5	5	1.4	15	17		18.90	46892

Part Number	Nominal Size	Description	Material	Finish
14689011	M10X1.25	NUT, TUBE END M10X1.25 R50 ZND	R50	ZND
14689111	M12X1.25	NUT, TUBE END M12X1.25 R50 ZND	R50	ZND

Fiat 14281/01 Male unions for pipes with swollen ends

SOLUTION A

(For galvanized pipe plastic-coated with polyamide or epoxy or PVF, or aluminum-plated pipe coated with polyamide applied by powder process)

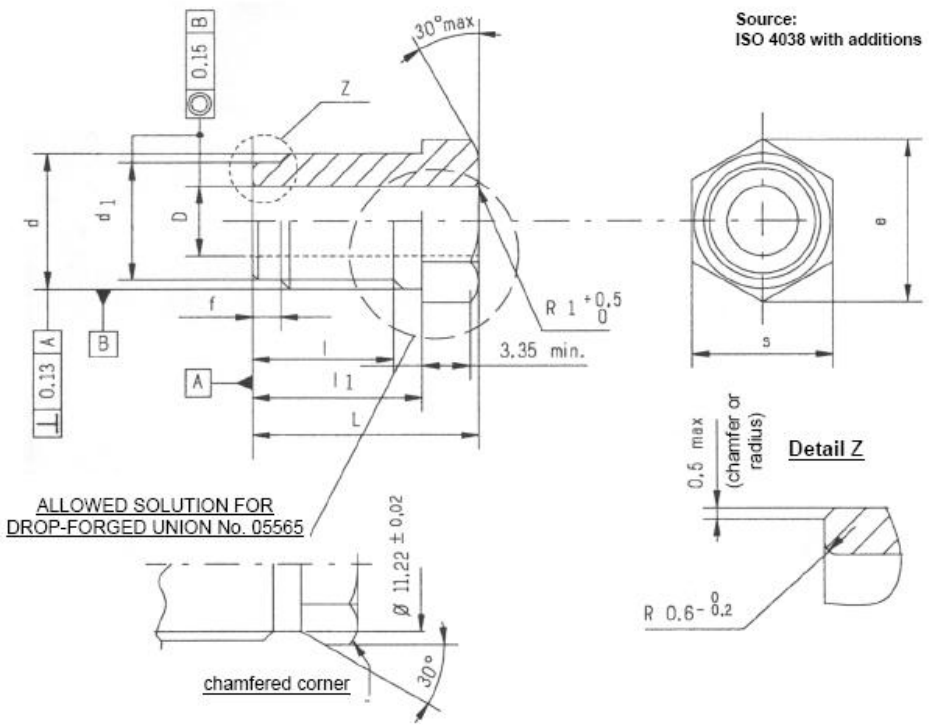

(pipe ø) d 2	d ①	d_1		D		f		l min.	l_1 (js14)		L (js14)		s (h13)		e min.	Std. part no.
									nom.	limit deviation	nom.	limit deviation	nom.	limit deviation		
4.76	M10x1	8.4	0 - 0.2	5	+ 0.2 0	2.3	+ 0.5 0	10	12.5	±0.215	16.5	±0.215	11	0 -0.270	12.2	46957
4.76	M12x1	8.4		5		2.3		12.5	15	±0.215	20	±0.215	13	0 -0.270	14.38	01040
4.76	M12x1	10.4		5		2.3		12.5	15	±0.215	20	±0.215	11	0 -0.270	12.2	05565
6	M12x1	10.4		6.3		2.3		12.5	15	±0.215	20	±0.215	13	0 -0.270	14.38	46958
8	M14x1.5	11.7		8.3		3.3		17	20.5	±0.260	25.5	±0.260	14	0 -0.270	15.51	46959

Part Number	Fiat standard part number					Finish
47551451	46957					FE/ZN NI
14695811	46958					FE/ZN NI
14695815	46958					FE/ZN12 III
14695911	46959					FE/ZN NI

Fiat 14293 Formed Tube End Fittings for Air Conditioning Systems – Welded Type

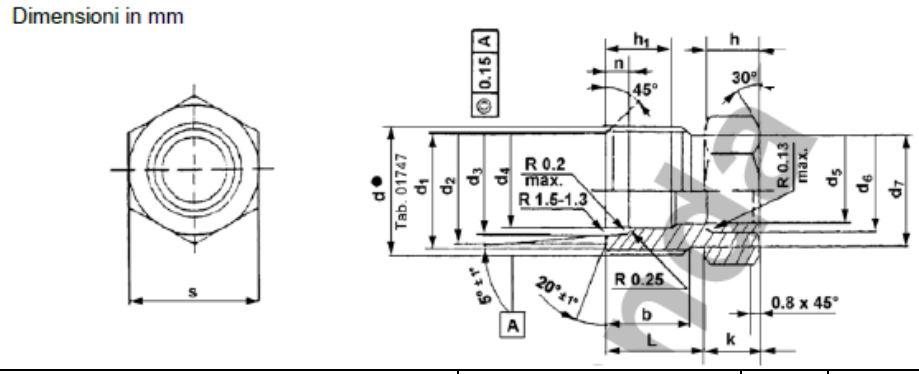

Part Number	Thread	Tube	S	L	Mat	Fin
14700111	5/8–18 UNF–2A	9.52	17	12.2	STL	ZND
48152186	1-1/16–14 UNS–2A	19.05	30	21.1	STL	ZND

Fiat 14294 Tube Nuts for Air Conditioning Systems

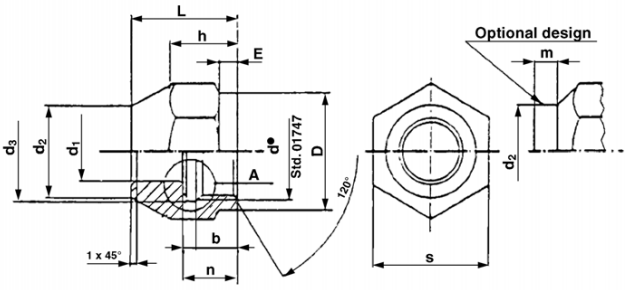

Part Number	Description	D	S	L	Mat	Fin
14701211	Nut, Tube end 5/8-18	5/8-18 UNF – 2B	19	17.5	STL	ZND
48152158	Nut, Tube end 1-1/16-14	1-1/16-14 UNS – 2B	32	29.5	STL	ZND

Fiat 14295 Tube Nuts for Air Conditioning Systems

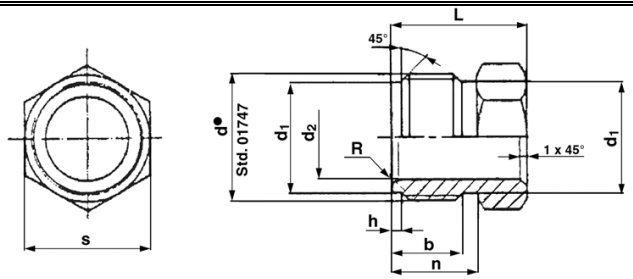

Part Number	Description	D	S	L	Mat	Fin
14702211	Nut, Tube end 5/8-18	5/8-18 UNF – 2B	17	13.7	STL	ZND

Fiat 14517
Rivet Plugs

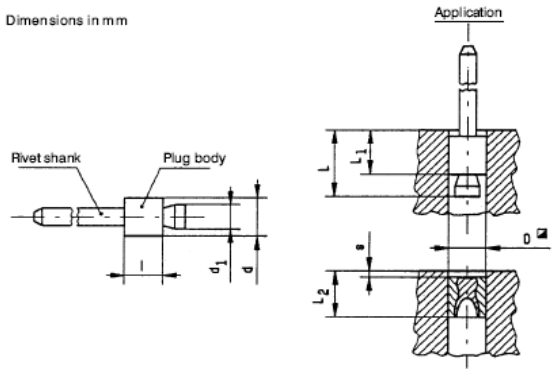

Part Number	Description	D	d +0.1/0	d1 max	l max	L max	L1 max	L2 max	s
14536290	Rivet Plug 6	6	5.9	4.6	5.9	11.7	7.3	7.9	1.3
14536390	Rivet Plug 7	7	6.9	4.6	6.9	13.7	8.3	8.9	1.3
14536490	Rivet Plug 8	8	7.9	6.3	7.9	15.7	9.5	10.2	1.5
14536590	Rivet Plug 10	10	9.9	6.3	9.9	19.8	11.5	12.2	1.5

Fiat 14530	Hex Head Threaded Plugs Style A shown Refer to Standard for Style B	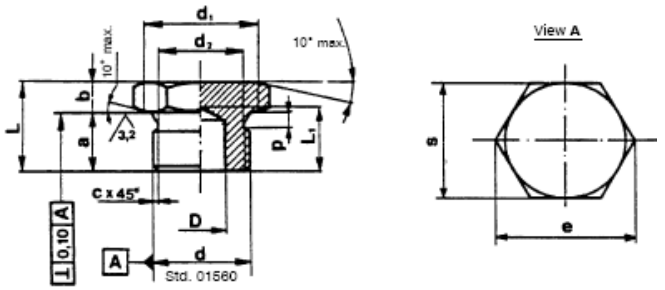

Part Number	Description	d	d2	D	L	L1	b	e	s	Fin	Mat
11903011	Plug, M10 x 1	M10 x 1	8.30	5	11	9	4	14.38	13	ZND	5.8
11903014	Plug, M10 x 1	M10 x 1	8.30	5	11	9	4	14.38	13	DAC	5.8
11903040	Plug, M10 x 1	M10 x 1	8.30	5	11	9	4	14.38	13	PLN	BRS
10300211	Plug,M6 x 1	M6 x 1	4.30		10		4	0.8	10	ZND	5.8
10300911	Plug,M8 x 1.25	M8 x 1.25	5.90		11		4	14.38	13	ZND	5.8
11903111	Plug,M10 x 1.25	M10 x 1.25	7.90	5	11	9	4	14.38	13	ZND	5.8
11903114	Plug,M10 x 1.25	M10 x 1.25	7.90	5	11	9	4	14.38	13	DAC	5.8
11903211	Plug,M12 x 1.25	M12 x 1.25	9.90	6	12	10	4	18.90	17	ZND	5.8
11903214	Plug,M12 x 1.25	M12 x 1.25	9.90	6	12	10	4	18.90	17	DAC	5.8
10300511	Plug,M12 x 1.5	M12 x 1.5	9.55	6	12	10	4	18.90	17	ZND	5.8
10300640	Plug,M14 x 1.5	M14x1.5	11.55	8	14	12	5	21.10	19	PLN	BRS
10300611	Plug,M14 x 1.5	M14x1.5	11.55	8	14	12	5	21.10	19	ZND	5.8
@90393137	Plug,M14 x 1.5	M14x1.5	11.55	8	14	12	5	21.10	19	PLN	A2-70
10300711	Plug,M16 x 1.5	M16x1.5	13.55	10	14	12	5	24.49	22	ZND	5.8
10300714	Plug,M16 x 1.5	M16x1.5	13.55	10	14	12	5	24.49	22	DAC	5.8
10300740	Plug,M16 x 1.5	M16x1.5	13.55	10	14	12	5	24.49	22	PLN	BRS
10300811	Plug,M18 x 1.5	M18x1.5	15.55	12	14	12	5	26.75	24	ZND	5.8
10300814	Plug,M18 x 1.5	M18x1.5	15.55	12	14	12	5	26.75	24	DAC	5.8
10305811	Plug,M20 x 1.5 Style B	M20x1.5	17.55	10	19	15	9	18.90	17	ZND	5.8
@90393142	Plug,M20 x 1.5 Style B	M20x1.5	17.55	10	19	15	9	18.90	17	PLN	A2-70
10305111	Plug,M22 x 1.5 Style B	M22x1.5	19.55	14	21	17	11	24.49	22	ZND	5.8
10305114	Plug,M22 x 1.5 Style B	M22x1.5	19.55	14	21	17	11	24.49	22	DAC	5.8
10305171	Plug,M22 x 1.5 Style B	M22x1.5	19.55	14	21	17	11	24.49	22	ZND	12.9
10305174	Plug,M22 x 1.5 Style B	M22x1.5	19.55	14	21	17	11	24.49	22	DAC	12.9
10305911	Plug,M22 x 1.5 Style B	M22x1.5	19.55	14	27	23	11	24.49	22	ZND	5.8
10305411	Plug,M28 x 1.5 Style B	M28x1.5	25.55	18	22	18	11	30.14	27	ZND	5.8

@ Part number not available in Fiat 14530. Dimension based on Fiat 14530 with Stainless Steel material A2-70.

Fiat 14534	Round Head Threaded Plugs with Hexagon socket	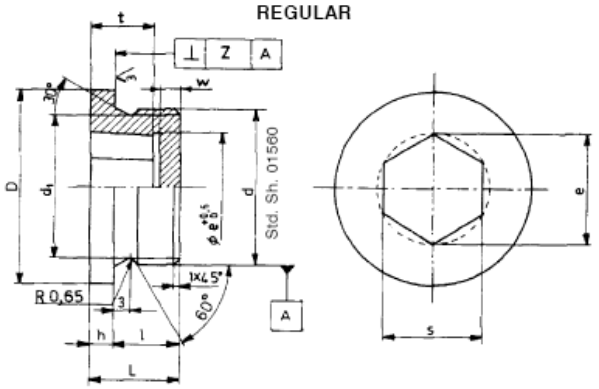

Part Number	Description	d	D	L	t	w	l	h	d1	s	e	Mat
10273140	Plug	M18x1.5	24	13	7.5	3	10	3	15.55	10	11.45	BRASS
10273111	Plug	M18x1.5	24	13	7.5	3	10	3	15.55	10	11.45	5.8 ZND
10275011	Plug	M22x1.5	27	13	7.5	3	10	3	19.55	12	13.74	5.8 ZND
10275014	Plug	M22x1.5	27	13	7.5	3	10	3	19.55	12	13.74	5.8 DAC
10275311	Plug	M22x1.5	27	19	7.5	3	16	3	18.55	12	13.74	5.8 ZND
10278340	Plug	M28x1.5	34	15	9	3.5	11	4	25.55	17	19.44	BRASS
10278311	Plug	M28x1.5	34	15	9	3.5	11	4	25.55	17	19.44	5.8 ZND
10276111	Plug	M32X1.5	38	15	9	3.5	11	4	29.55	19	21.73	5.8 ZND
10276140	Plug	M32X1.5	38	15	9	3.5	11	4	29.55	19	21.73	BRASS

Fiat 14540	O-Rings for Threaded Plugs	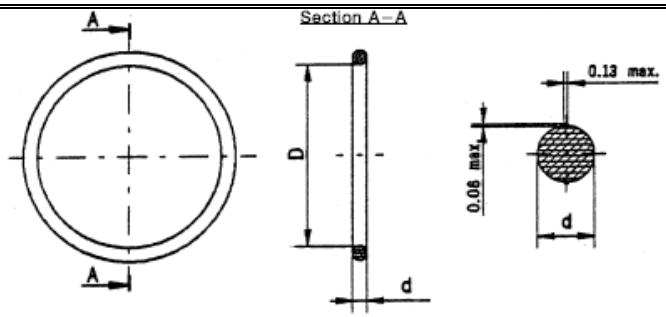

Part Number	Description	D	d	Mat
14437585	O-Ring for threaded Plug 1.5 x 8	8	1.50	NBR 90
14437685	O-Ring for threaded Plug 2.4 x 9.3	9.30	2.40	NBR 90
14437785	O-Ring for threaded Plug 2.4 x 11.3	11.30	2.40	NBR 90
14437885	O-Ring for threaded Plug 2.4 x 13.3	13.30	2.40	NBR 90
14437889	O-Ring for threaded Plug 2.4 x 13.3	13.30	2.40	FPM 90
14437985	O-Ring for threaded Plug 2.4 x 15.3	15.30	2.40	NBR 90
14438085	O-Ring for threaded Plug 2.4 x 19.3	19.30	2.40	NBR 90
14438185	O-Ring for threaded Plug 3 x 24	24	3.0	NBR 90
14438285	O-Ring for threaded Plug 3 x 29.5	29.50	3.0	NBR 90
14438385	O-Ring for threaded Plug 3 x 39	39	3.0	NBR 90
14438485	O-Ring for threaded Plug 3 x 46	46	3.0	NBR 90
14438585	O-Ring for threaded Plug 2.4 x 17.3	17.30	2.40	NBR 90

Fiat 14545 Taper Thread Plugs
Material
STL: 4.8 steel Per 52605/01
AL: Aluminum P-ALP 99.8 53209

**Per DIN 906

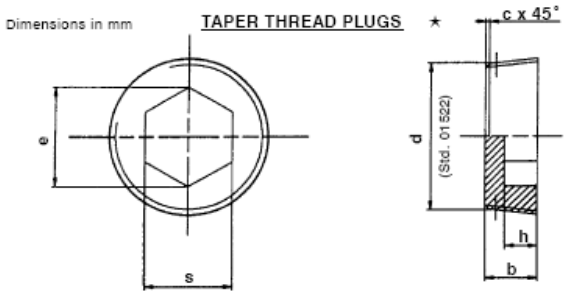

Part Number	Description	Taper Thread d	b	h	s	e	Mat'l	Finish
14326101	Plug, Pipe, M8X1.25X11 STL ZND	8 (x1.25)	11	6	4	4.59	STL	ZND
14326104	Plug, Pipe, M8X1.25X11 STL DAC	8 (x1.25)	11	6	4	4.59	STL	DAC
14326150	Plug, Pipe, M8X1.25X11 AL	8 (x1.25)	11	6	4	4.59	AL	PLN
47741913	Plug, Pipe, M10X1X8 STL ZND	10 (x1)	8	6	5	5.73	STL	ZND
10266950	Plug, Pipe, M10X1X8 AL	10 (x1)	8	6	5	5.73	AL	PLN
14325850	Plug, Pipe, M10X1X11 AL	10 (x1)	11	6	5	5.73	AL	PLN
14326001	Plug, Pipe, M10X1.25X11 STL ZND	10 (x1.25)	11	6	5	5.73	STL	ZND
14326050	Plug, Pipe, M10X1.25X11 AL	10 (x1.25)	11	6	5	5.73	AL	PLN
14326004	Plug, Pipe, M10X1.25X11 STL DAC	10 (x1.25)	11	6	5	5.73	STL	DAC
10275501	Plug, Pipe, M12X1.25X11 STL ZND	12 (x1.25)	11	6	6	6.87	STL	ZND
10275550	Plug, Pipe, M12X1.25X11 ALUM	12 (X1.25)	11	6	6	6.87	AL	PLN
10275504	Plug, Pipe, M12X1.25X11 STL DAC	12 (x1.25)	11	6	6	6.87	STL	DAC
10269401	Plug, Pipe, M12X1.5 X11 STL ZND	12(x1.5)	11	6	6	6.87	STL	ZND
10269404	Plug, Pipe, M12X1.5 X11 STL DAC	12(x1.5)	11	6	6	6.87	STL	DAC
10269501	Plug, Pipe, M14X1.5X11 STL ZND	14 (x1.5)	11	6	6	6.87	STL	ZND
10269504	Plug, Pipe, M14X1.5X11 STL DAC	14 (x1.5)	11	6	6	6.87	STL	DAC
10269601	Plug, Pipe, M16X1.5X11 STL ZND	16 (X1.5)	11	6	8	9.17	STL	ZND
10269704	Plug, Pipe, M18X1.5X11 STL DAC	18 (x1.5)	11	6	10	11.45	STL	DAC
10268404	Plug, Pipe, M20X1.5X11 STL DAC	20 (x1.5)	11	6	10	11.45	STL	DAC
10269801	Plug, Pipe, M22X1.5X11 STL ZND	22 (x1.5)	11	6	12	13.74	STL	ZND
10269804	Plug, Pipe, M22X1.5X11 STL DAC	22 (x1.5)	11	6	12	13.74	STL	DAC
92183987	Plug, Pipe, M24X1.5X11 STL DAC	24 (x1.5)	11	6	12	13.74	STL	DAC
**91893302	Plug, Pipe, M30X1.5X12 STL ZND	30 (X1.5)	12	6	17	19.4	STL	ZND
**84129711	Plug, Pipe, M30X2X12 STL PLN	30 (X2)	12	6	17	19.4	STL	PLN

Fiat 14545 Threaded Rod Plugs
Aluminum

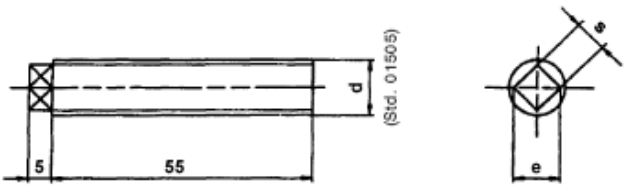

Part Number	Description	d	e	s	
10269150	PLUG, THREADED M6 X 55 AL PLN	M6	5.3	4	

Fiat 14548 Slotted Threaded Plugs

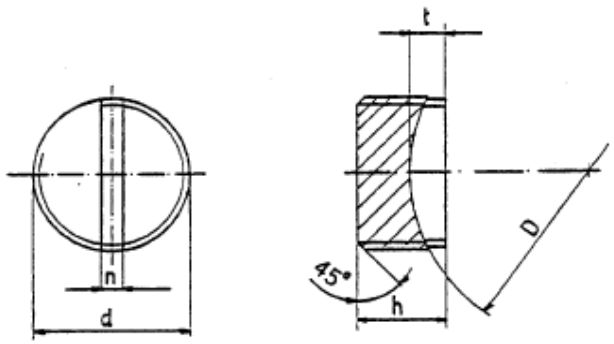

Part Number	Description	d	h	n	D	t	Mat	Fin
10151050	Plug, Slotted Threaded M6	M6	6	1.5	50	1.5	AL	PLN
10152111	Plug, Slotted Threaded M8	M8	6	1.5	50	1.5	5.8	ZND
10152311	Plug, Slotted Threaded M12x1.25	M12x1.25	8	2.0	50	2	5.8	ZND
10152314	Plug, Slotted Threaded M12x1.25	M12x1.25	8	2.0	50	2	5.8	DAC
10150750	Plug, Slotted Threaded M14x1.5	M14x1.5	8	2.0	50	2	AL	PLN

Fiat 14551 Hexagon or square head taper pipe plug

Material: ISO 898

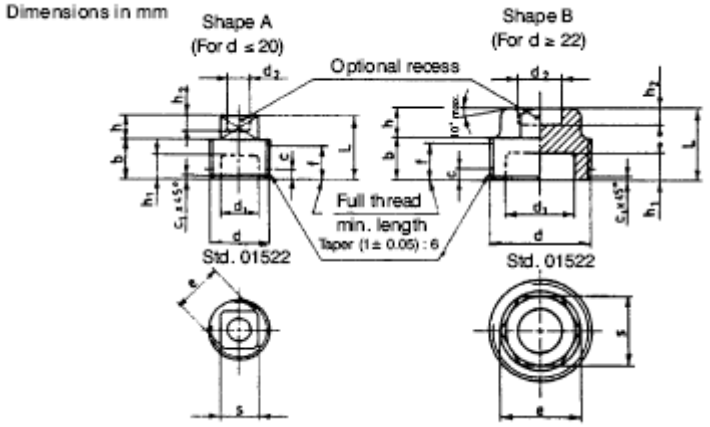

Part Number	Description	Shape	Thread	Thread Length b	Wrench Length h	Wrench Flats S	Length L	Mat'l	Finish
14324011	Plug, Taper M10X1	A SQ-HD	M10X1	9	5	7	14	5.8	ZND
14324014	Plug, Taper M10X1	A SQ-HD	M10X1	9	5	7	14	5.8	DAC
14323911	Plug, Taper M10X1.25	A SQ-HD	M10X1.25	9	5	7	14	5.8	ZND
14323914	Plug, Taper M10X1.25	A SQ-HD	M10X1.25	9	5	7	14	5.8	DAC
14324111	Plug, Taper M12X1.5	A SQ-HD	M12X1.5	13	5	8	18	5.8	ZND
14324114	Plug, Taper M12X1.5	A SQ-HD	M12X1.5	13	5	8	18	5.8	DAC
14323611	Plug, Taper M18X1.5	A SQ-HD	M18X1.5	13	8	13	21	5.8	ZND
14324411	Plug, Taper M22X1.5	B hex	M22X1.5	13	8	17	21	5.8	ZND
14324414	Plug, Taper M22X1.5	B hex	M22X1.5	13	8	17	21	5.8	DAC

Fiat 14552 Hexagon Socket Head taper Thread plug	Material: Steel 52605/01	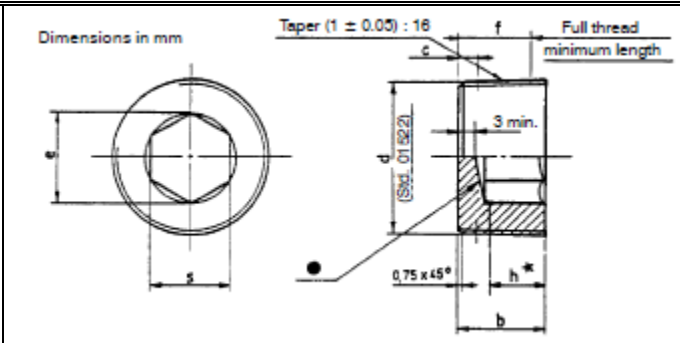							
Part Number	Description	d	b	f	h	c	s	Mat	Finish
14324911	Plug, Hex Soc M14x1.5	M14x1.5	13	11	6	3	6	5.8	ZND

Fiat 14553 Hexagon head magnetic threaded plugs	Material: R50 Fiat 52605/01		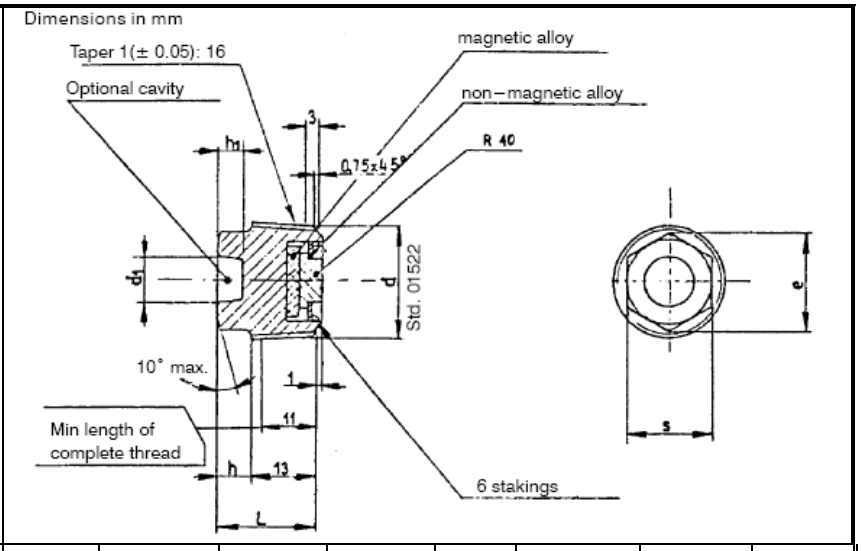							
Part Number	Desc	d	D	h	h1	L	s	e	Material	Finish
14326211	Plug, magnetic	22x1.5	9	8	5	21	17	18.90	R50	ZND

Fiat 14553 Hexagon head magnetic plugs	Material: Brass Fiat 53436	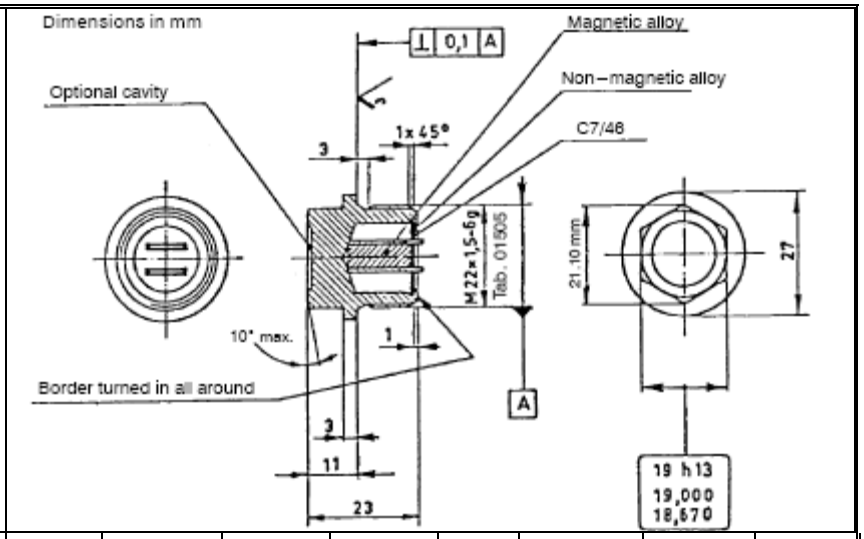

Part Number	Desc	d	D	h	h1	L	s	e	Material	Finish
14326540	Plug, magnetic	22 x 1.5	9	8	5	21	17	18.90	Brass	PLN

Fiat 14561 Open and Spring Clips	Material: Steel FEP01-1 Fiat 52135 CR SHEET, CNH MAT1010, GRADE A1	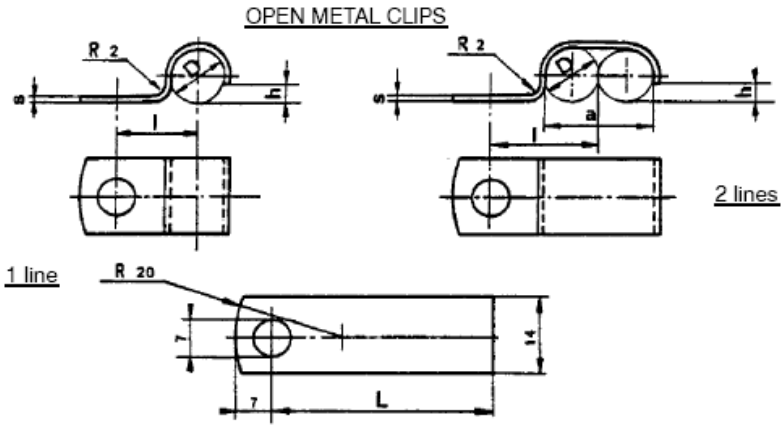

Part Number	Desc d	D	L	h	s	Material	Finish
10112904	Clamp,Open 1-6 STL DAC	6	23	1.5	1	STL	DAC
10113104	Clamp,Open 1-8 STL DAC	8	27	2	1	STL	DAC
10113201	Clamp,Open 1-10 STL ZND	10	31	3	1	STL	ZND
10113204	Clamp,Open 1-10 STL DAC	10	31	3	1	STL	DAC
10113301	Clamp,Open 1-12 STL ZND	12	36	4	1.5	STL	ZND
10113304	Clamp,Open 1-12 STL DAC	12	36	4	1.5	STL	DAC
10112504	Clamp, Open 1-16 STL DAC	16	46	5	1.5	STL	DAC

Fiat 14562 cable and tubing spring clips
One Way

(Two way& Three way listed below)

Material: polyamide 55232

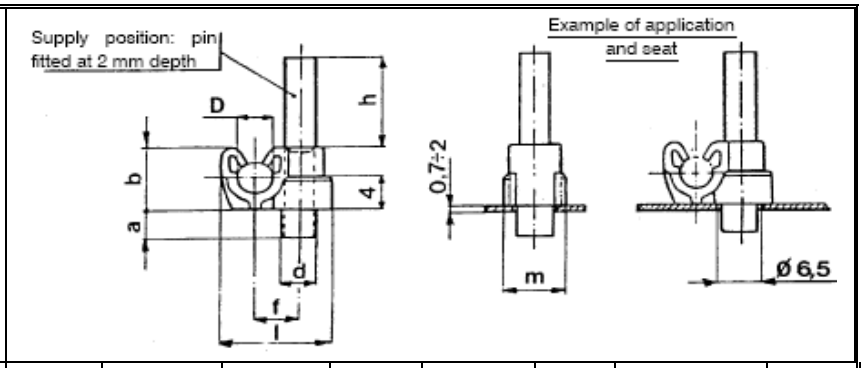

Part Number	Desc	d +0.05 -0.15	D +0.2 0	a	b	h	f	l	m	Material	Finish
14571780	Clip, cable	6.5	5	6	10.5	16.2	7	18.5	12	Polyimide	WHT
14571880	Clip, cable	6.5	6.3	6	12.2	18.2	8.5	20.2	12	Polyimide	WHT
14571980	Clip, cable	6.5	8	6	16	22	9	22.7	12	Polyimide	WHT
14571987	Clip, cable	6.5	8	6	16	22	9	22.7	12	Polyimide	BLK

Fiat 14562 cable and tubing spring clips
Style A

Material: polyamide 55232

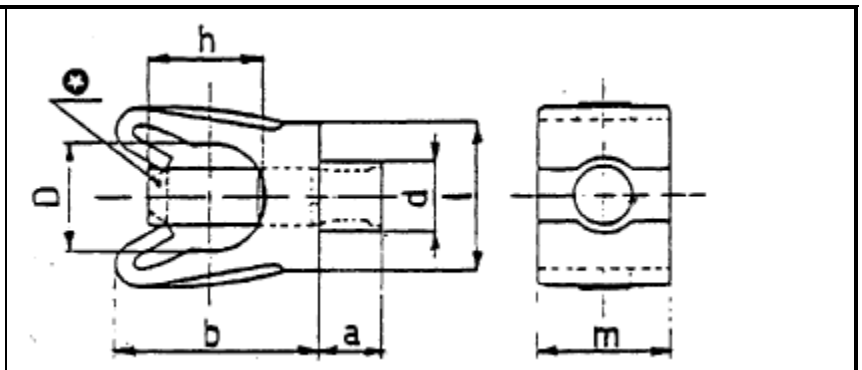

Part Number	Desc	D	d	a	b	h	l	m	D1	Material	Finish
14574287	Clip, cable	12	6.5	6	18.5	9.5	16	12	6.5	Polyimide	Black
14574180	Clip, cable	14	8	6	24	11	16	15	8	Polyimide	White
14574187	Clip, cable	14	8	6	24	11	16	15	8	Polyimide	Black

Fiat 14562 cable and tubing spring clips
Style C

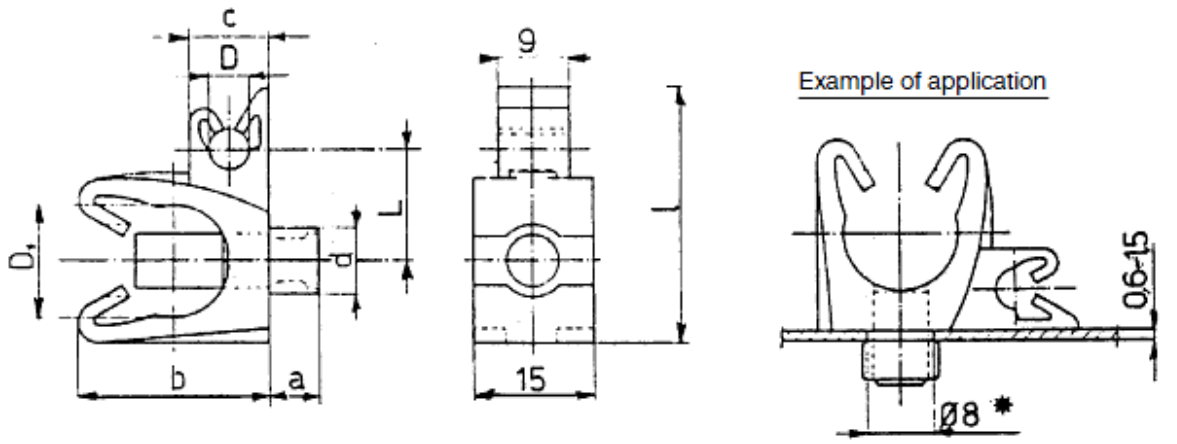

Part Number	D	D1	d	a	b	c	L	l	Material	Color
47603907	4.8	16	8	6	25	10	15	35	PA 80.400	Gray

Fiat 14562 cable and tubing spring clips
Two Way

Material: polyamide 55232

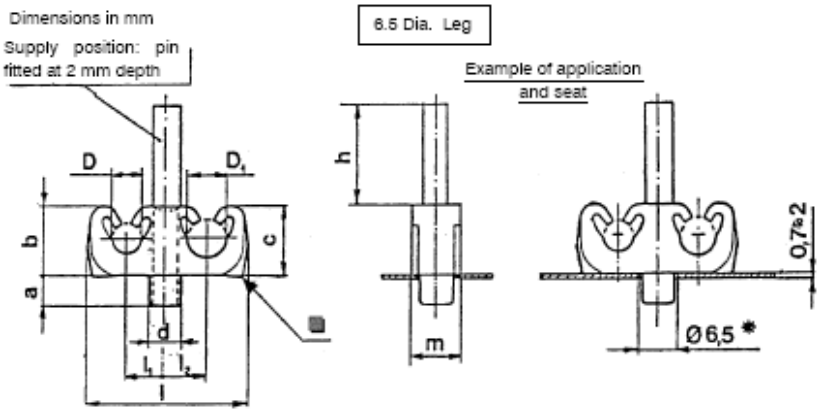

Part Number	Desc	d	D	D1	a	b	h	c	l	l1	l2	m	Mat	Fin
14575380	Clip	6.5	4.8	4.8	6	11	17	11	25	7	7	10	Polyamide	wht
14581080	Clip	6.5	4.8	6	6	11	20	13	27	7	8	9	Polyamide	wht
14575280	Clip	6.5	4.8	7.5	6	11	20	12.5	27	7	8	9	Polyamide	wht
14581180	Clip	6.5	6.3	6.3	6	12.5	18.5	12.5	28	8	8	9	Polyamide	wht
14575480	Clip	6.5	6	7.5	6	13.5	20	13.5	29	8	8	9	Polyamide	wht
14575580	Clip	6.5	7.5	7.5	6	13.5	20	13.5	29	8	8	9	Polyamide	wht
	Clip	6.5	5.5	9	6	12.1	19	16.5	30	8	8	9	Polyamide	wht

Fiat 14562 cable and tubing spring clips
Two Way

Material: polyamide 55232

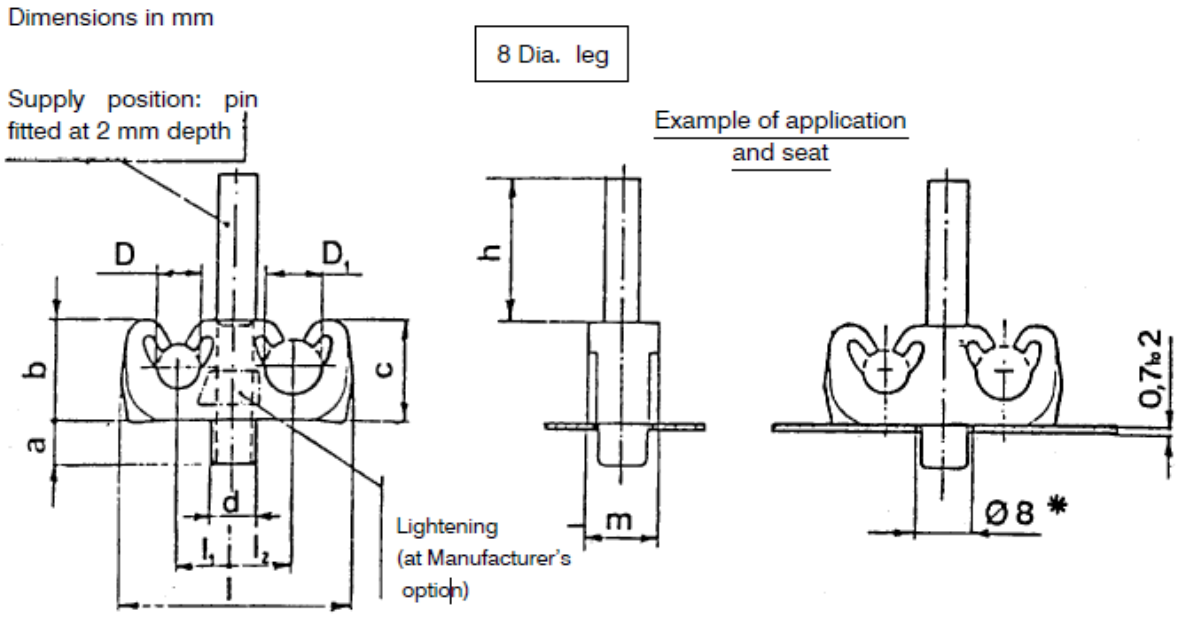

Part Number	Desc	d	D	D1	a	b	h	c	l	l1	l2	m	Mat	Fin
14503787	Clip	8	8	8	6	16	22	16	33.20	9.1	9.1	9	Polyamide	blk
51457783	Clip	8	14	4.8	6	24	18	11	40	15	9	15	Polyamide	blk

Fiat 14562 cable and tubing spring clips
Three Way

Material: polyamide 55232

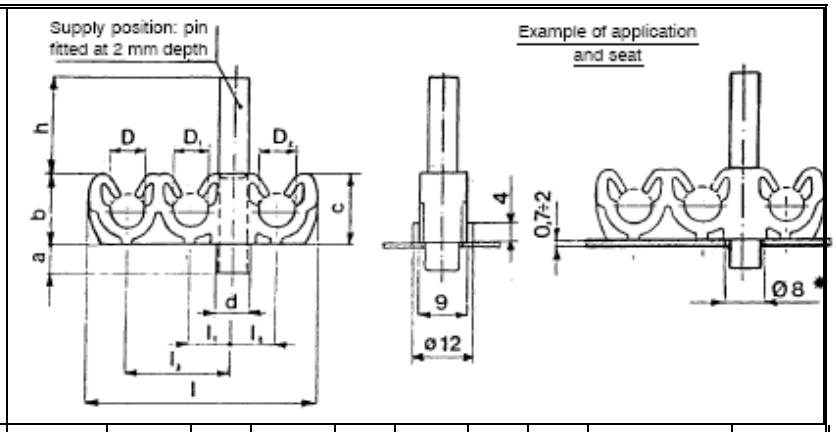

Part Number	Desc	d	D	D1	D2	a	b	h	c	l	l1	l2	l3	Mat	Fin
14504487	Clip	8	6.3	8	8	6	14.3	22	16	45	9	9	22	Polymide	Blk
14504387	Clip	8	8	8	8	6	15	21	15	47	9	9	23	Polymide	Blk
14579580	Clip	6.5	8	6.3	8	6	13.7	20	13.7	41	8	8	20	Polymide	WHT

Fiat 14562 cable and tubing spring clips	Material: polyamide 55232	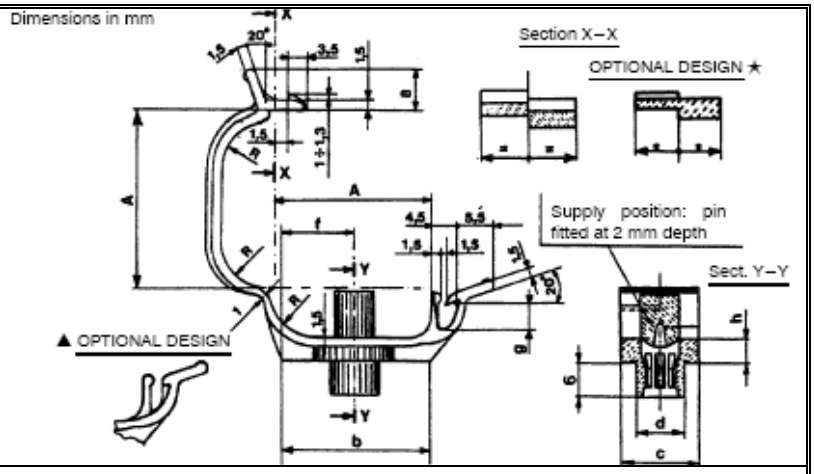

Part Number	Description
14631387	Cable and Tubing Spring Clip 15 X 15 Style Z
14631587	Cable and Tubing Spring Clip 28 X 16 Style Z
14631887	Cable and Tubing Spring Clip 45 X 28 Style Z

Fiat 14564 cable and tubing snap-in clips Material: Polyamide Plastic 55232

* Hole Tolerance per Fiat 01328

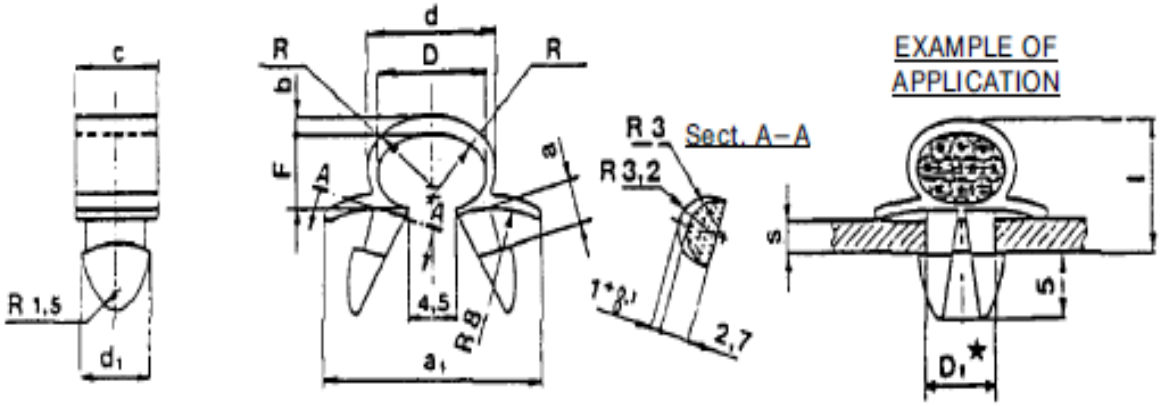

Part Number	Designat.	D	a +0.2	a1	b	c	d	d1	F	R	l	s	D1	Color
14569680	12x3	12.5	3	21	1.6	8	15.2	6.5	8.5	11	14	0.7 – 2.5	6.5	Gray
14569880	14X3	14.5	3	21	1.8	8	17.5	6.5	9.5	13	15	0.7 – 2.5	6.5	Green

at 14579 Cages for Square Nuts

Material:Steel –Fiat 52806

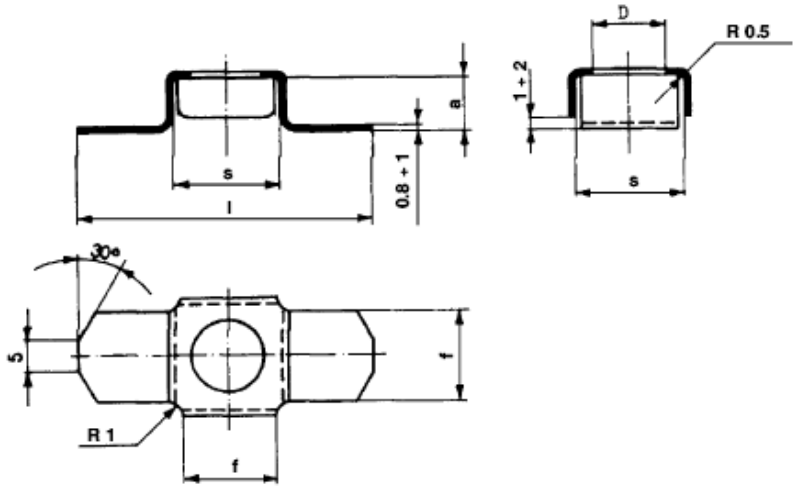

Part Number	Description	a	s	D	f	l	Material	Finish
12304100	Cage, square nut 5.5 x 10.5	5.5	10.5	7	8.5	38	STL	PLN

Fiat 14607 Rectangular Section Sealing Washer

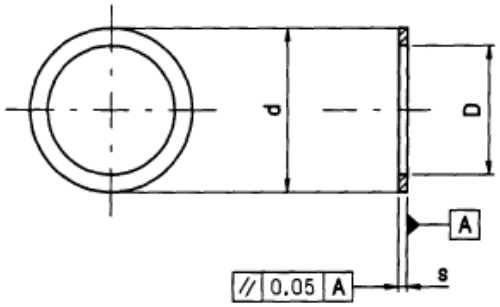

Part Number	Description	d	D	Thickness	Material
10297860	Seal, M6 x 12 copper rectangular	12	6.2	1.5	Copper
14330260	Seal, M8 x 12 copper rectangular	12	8.2	1	Copper
10260060	Seal, M8 x 14 copper rectangular	14	8.2	1	Copper
10260860	Seal, M8 x 14 copper rectangular	14	8.2	1.5	Copper
10296360	Seal, M10 x 14 copper rectangular	14	10.2	0.5	Copper
10260160	Seal, M10 x 14 copper rectangular	14	10.2	1	Copper
10260150	Seal, M10 x 14 aluminum rectangular	14	10.2	1	Aluminum
10260960	Seal, M10 x 14 copper rectangular	14	10.2	1.5	Copper
10298360	Seal, M10 x 16 copper rectangular	16	10.2	1	Copper
10284460	Seal, M10 x 16 copper rectangular	16	10.2	1.5	Copper
10261060	Seal, M12 x 16 copper rectangular	16	12.2	1.5	Copper
10296160	Seal, M12 x 18 copper rectangular	18	12.2	1	Copper
10298460	Seal, M12 x 18 copper rectangular	18	12.2	1.5	Copper
10261160	Seal, M14 x 18 copper rectangular	18	14.2	1.5	Copper
10279760	Seal, M14 x 20 copper rectangular	20	14.2	0.5	Copper
10282460	Seal, M14 x 20 copper rectangular	20	14.2	1	Copper
10280060	Seal, M14 x 20 copper rectangular	20	14.2	1.5	Copper
10261360	Seal, M16 x 20 copper rectangular	20	16.3	1.5	Copper
10278650	Seal, M16 x 22 aluminum rectangular	22	16.3	1	Aluminum
10278660	Seal, M16 x 22 copper rectangular	22	16.3	1	Copper
10257060	Seal, M16 x 22 copper rectangular	22	16.3	1.5	Copper
10261460	Seal, M16 x 24 copper rectangular	24	16.3	1.5	Copper
10261560	Seal, M18 x 22 copper rectangular	22	18.3	1.5	Copper
10263160	Seal, M18 x 24 copper rectangular	24	18.3	1	Copper
10263150	Seal, M18 x 24 aluminum rectangular	24	18.3	1	Aluminum
10259960	Seal, M18 x 24 copper rectangular	24	18.3	1.5	Copper
10261660	Seal, M18 x 26 copper rectangular	26	18.3	1.5	Copper
10263360	Seal, M20 x 26 copper rectangular	26	20.3	1	Copper
91790342	Seal, M20 x 26 aluminum rectangular	26	20.3	1.5	Aluminum
10257460	Seal, M20 x 26 copper rectangular	26	20.3	1.5	Copper
10261760	Seal, M20 x 28 copper rectangular	28	20.3	1.5	Copper
10279560	Seal, M22 x 28 copper rectangular	28	22.3	1	Copper
10263450	Seal, M22 x 28 aluminum rectangular	28	22.3	1.5	Aluminum
10263460	Seal, M22 x 28 copper rectangular	28	22.3	1.5	Copper
10261850	Seal, M22 x 30 aluminum rectangular	30	22.3	1.5	Aluminum
10264560	Seal, M24 x 32 copper rectangular	32	24.4	1.5	Copper
10243760	Seal, M26 x 34 copper rectangular	34	26.4	2	Copper
10262160	Seal, M28 x 34 copper rectangular	34	28.4	2	Copper
10296260	Seal, M28 x 36 copper rectangular	36	28.4	1.5	Copper
10243860	Seal, M28 x 36 copper rectangular	36	28.4	2	Copper
10265060	Seal, M32 x 38 copper rectangular	38	32.4	1.5	Copper

Fiat 14607

Rectangular Section Fiber Seals

Common Grade Color Black = General Application
Hard Grade Color Red = Sealing Application
Insulating Grade Color Grey = Electrical Application

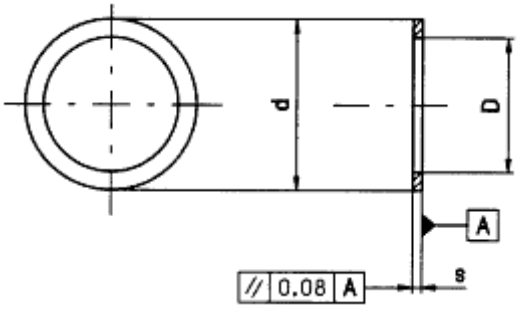

Part Number	Description	D	d	Thickness	Fiber Material Grade
10265160	Seal, M35 x 41 copper rectangular	41	35.4	1.5	Copper
10287380	WASHER, SEALING, M12X18X1.5	12.2	18.0	1.5	Common
10287385	WASHER, SEALING, M12X18X1.5	12.2	18.0	1.5	Hard
10296480	WASHER, SEALING, M10X16X1.0	10.2	16	1.0	Common

Fiat 14618 O-Rings
Procurement Spec: 9.14618
OR-R/150 - P.S. 9.14618 (HNBR)
OR-O/150 - P.S. 9.14618 (HNBR)
OR-GB/100 – P.S. 9.14618

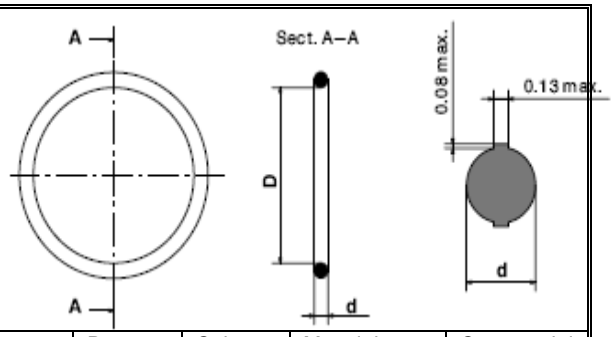

Part Number	Description	d Nom Section mm	D ID mm	Color	Material	Commercial Designation
10318883	O-RING, AIRCON 1.6X8.1X GREEN OR-R/150	1.6	8.1	Green	OR-R/150	--
47963884	O-RING, 1.6X8.1 OR-R/150	1.6	8.1	Yellow or Brown	OR-R/150	--
10319183	O-RING, AIRCON 1.6X13.1 GREEN OR-R/150	1.6	13.1	Green	OR-R/150	--
10319983	O-RING, AIRCON 1.6X16.1GREEN OR-R/150	1.6	16.1	Green	OR-R/150	--
47963885	O-RING, 1.6X16.1 OR-R/150	1.6	16.1	Yellow or Brown	OR-R/150	--
14452883	O-RING, AIRCON 1.78X7.65 GREEN OR-R/150	1.78	7.65	Green	OR-R/150	011
47596010	O-RING, 1.78x12.42 BLACK OR-O/150	1.78	12.42	BLK	OR-O/150	014
47596501	O-RING, 1.78x18.77 BLACK OR-O/150	1.78	18.77	BLK	OR-O/150	018
92666242	O-RING, 1.78x60.05 BLACK OR-O/150	1.78	60.05	BLK	OR-O/150	036
47595979	O-RING, 1.78x75.92 BLACK OR-O/150	1.78	75.92	BLK	OR-O/150	041
14455986	O-RING, 1.78x82.27 BLACK OR-O/150	1.78	82.27	BLK	OR-O/150	042
14450483	O-RING, AIRCON 1.8X6.7 GREEN OR-R/150	1.8	6.7	Green	OR-R/150	--
14450683	O-RING, AIRCON 2.4X10.8GREEN OR-R/150	2.4	10.8	Green	OR-R/150	--
14450783	O-RING, AIRCON 2.4X13.4 GREEN OR-R/150	2.4	13.4	Green	OR-R/150	--
14450786	O-RING, AIRCON 2.4X13.4 BLACK OR-O/150	2.4	13.4	BLK	OR-O/150	--
14457389	O-RING, 2.62X17.12 BLACK OR-GB/100	2.62	17.12	BLK	OR-GB/100	115
47632795	O-RING, 2.62X21.89 BLACK OR-O/150	2.62	21.89	BLK	OR-O/150	118
47417679	O-RING, 2.62X23.47 BLACK OR-O/150	2.62	23.47	BLK	OR-O/150	119
14458086	O-RING, 2.62X28.24 BLACK OR-O/150	2.62	28.24	BLK	OR-O/150	122
47478179	O-RING, 2.62X32.99 BLACK OR-O/150	2.62	32.99	BLK	OR-O/150	125
47995649	O-RING, 2.62X36.17 BLACK OR-O/150	2.62	36.17	BLK	OR-O/150	127
48045772	O-RING, 2.62X44.12 BLACK OR-O/150	2.62	44.12	BLK	OR-O/150	132
14465486	O-RING, 3.53X82.14 BLACK OR-O/150	3.53	82.14	BLK	OR-O/150	236
47740126	O-RING, 5.33X94.62 BLACK OR-O/150	5.33	94.62	BLK	OR-O/150	343

Fiat 14618/02 Washer, Sealing – Special seal rings type

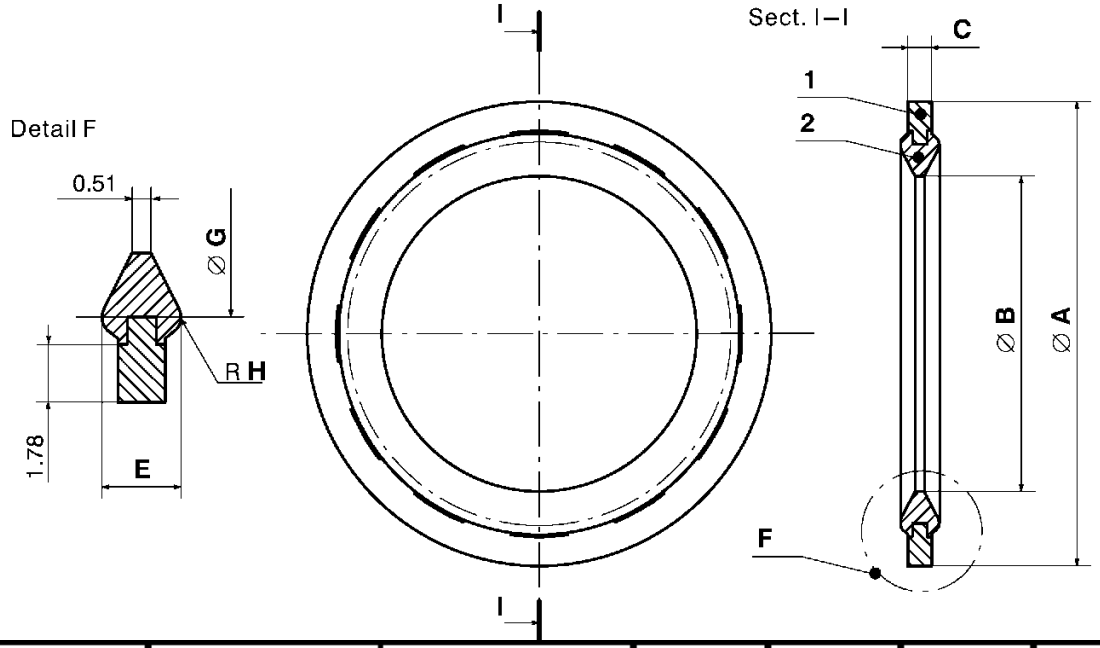

Designation	Ø A	Ø B	C +0,07 -0,03	E ±0:1	Ø G ±0:12	H
3/8"	16.00 $^{+0,13}_{-0,12}$	8.00 $^{+0,26}_{-0,00}$	1.25	2.03	10.67	0.41
1/2"	19.10 $^{+0,13}_{-0,12}$	11.20 $^{+0,11}_{-0,15}$	1.25	2.03	13.66	0.41
5/8"	23.60 $^{+0,15}_{-0,11}$	15.50 $^{+0,12}_{-0,14}$	1.25	2.13	18.03	0.51
3/4"	25.20 $^{+0,20}_{-0,08}$	17.10 $^{+0,19}_{-0,07}$	1.25	2.13	20.58	0.51

STD. PART		*Elastomeric part (EPDM)*	*Washer*
MATERIAL	Symbol	2AA712A13F17L14Z1 (75±5 IHRD)	DC 01
	Class - Table	Rubber – ASTMD 2000	Steel – EN 10139
	Treatment	---	Fe/Zn 7 IV S – 9.57405
PROCUREMENT SPECIFICATION		9.14618	

Part Number	Designation	Color
47624200	3/8”	Black
47624205	1/2”	Black
47624207	5/8”	Black
47624208	3/4”	Black

Fiat 14618/02 Washer, Sealing – Special seal rings type seal washer for 1234YF Gas Refrigerant

Dimensions in mm

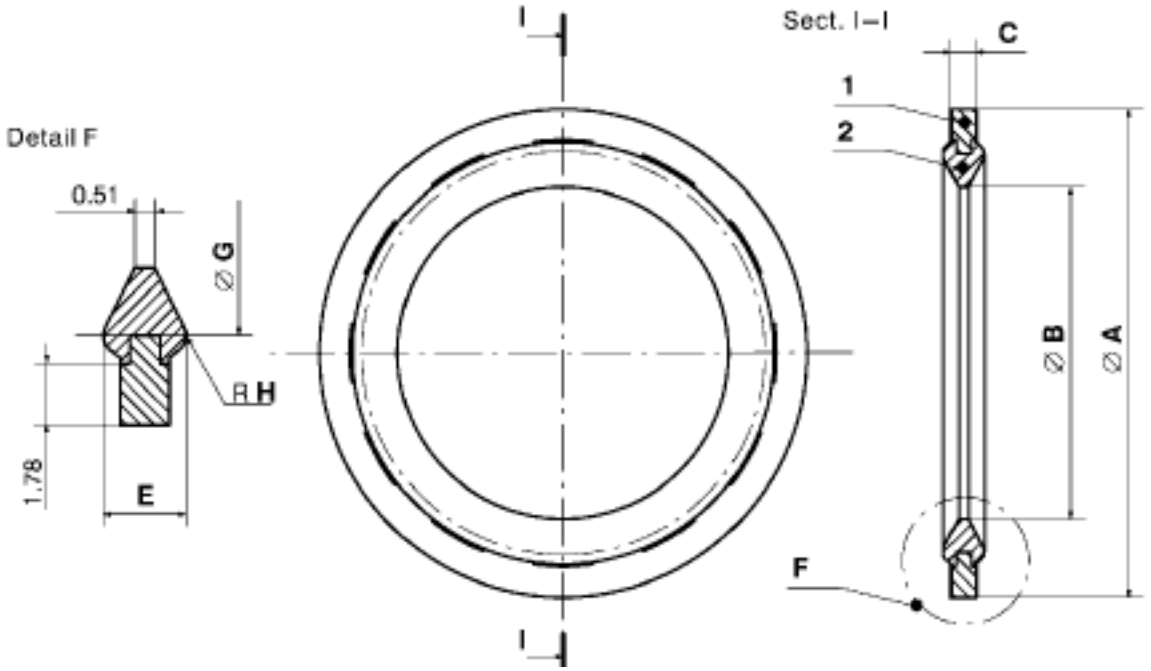

Designazione	∅ A	∅ B	C +0,07 -0,03	E ±0:1	∅ G ±0:12	H
3/8"	16.00 +0,13 -0,12	8.00 +0,26 -0,00	1.25	2.03	10.67	0.41
1/2"	19.10 +0,13 -0,12	11.20 +0,11 -0,15	1.25	2.03	13.66	0.41
5/8"	23.60 +0,15 -0,11	15.50 +0,12 -0,14	1.25	2.13	18.03	0.51
3/4"	25.20 +0,20 -0,08	17.10 +0,19 -0,07	1.25	2.13	20.58	0.51

STD. PART		*Elastomeric part (HNBR)*	*Washer*
MATERIAL	Class	OR – R/150	EN AW-6082-T6
	PROCUREMENT SPECIFICATION	9.14618	UNI EN 485-2
	Treatment	---	---
PROCUREMENT SPECIFICATION		9.14618	

Part Number	Designation	Color
92318874	3/8”	Brown
92318875	1/2”	Brown
92318876	5/8”	Brown
92318877	3/4”	Brown

Fiat 14649	Grease Relief Valves	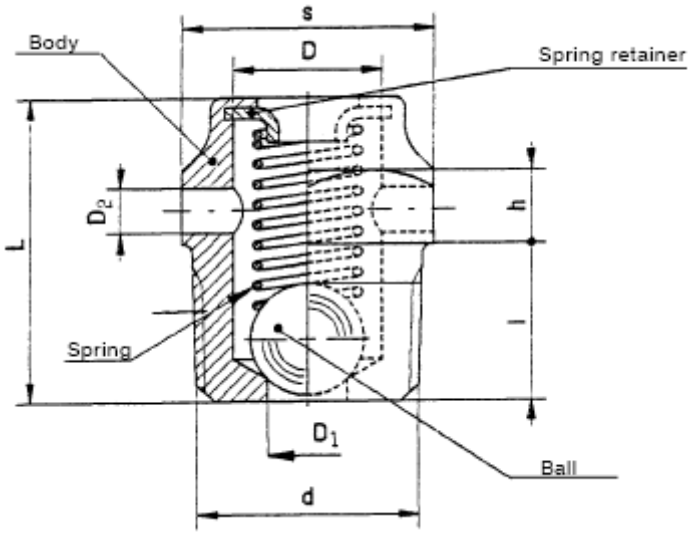							
Part Number	Description	h	D	L	D1	l	D2	Material	Finish
13411117	Valve, Relief M10	2.5	6.5	12.5	3.5	7	2	R50	BLK
13410917	Valve, Relief M10	2.5	6.5	12.5	3.5	7	2	R50	White

Fiat 17309/05 Flexible fuel lines

Material: E1-10 (9.02138/10)

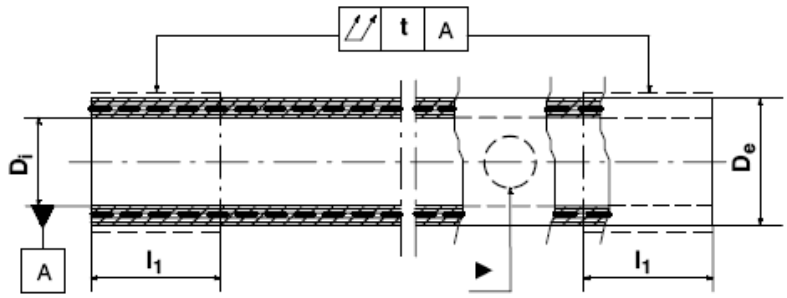

Part Number	Description	D1	De	l1	t	l	Material
19305980	Hose, fuel 60mm	7.5	14.5	21	0.7	60	Fabric Reinfr Rubber
19306080	Hose, fuel 70mm	7.5	14.5	21	0.7	70	Fabric Reinfr Rubber
92113570	Hose, fuel 140mm	7.5	14.5	21	0.7	110	Fabric Reinfr Rubber
19306780	Hose, fuel 140mm	7.5	14.5	21	0.7	140	Fabric Reinfr Rubber
47421619	Hose, fuel 160mm	7.5	14.5	21	0.7	160	Fabric Reinfr Rubber
47421631	Hose, fuel 170mm	7.5	14.5	21	0.7	170	Fabric Reinfr Rubber
47421643	Hose, fuel 190mm	7.5	14.5	21	0.7	190	Fabric Reinfr Rubber
47738704	Hose, fuel 210mm	7.5	14.5	21	0.7	210	Fabric Reinfr Rubber
51456403	Hose, fuel 225mm	7.5	14.5	21	0.7	225	Fabric Reinfr Rubber
47738705	Hose, fuel 280mm	7.5	14.5	21	0.7	280	Fabric Reinfr Rubber
47421652	Hose, fuel 300mm	7.5	14.5	21	0.7	300	Fabric Reinfr Rubber
19308080	Hose, fuel 340mm	7.5	14.5	21	0.7	340	Fabric Reinfr Rubber
47738706	Hose, fuel 360mm	7.5	14.5	21	0.7	360	Fabric Reinfr Rubber
19308280	Hose, fuel 380mm	7.5	14.5	21	0.7	380	Fabric Reinfr Rubber
47831652	Hose, fuel 430mm	7.5	14.5	21	0.7	430	Fabric Reinfr Rubber
47778642	Hose, fuel 450mm	7.5	14.5	21	0.7	450	Fabric Reinfr Rubber
19308780	Hose, fuel 480mm	7.5	14.5	21	0.7	480	Fabric Reinfr Rubber
19308980	Hose, fuel 525mm	7.5	14.5	21	0.7	525	Fabric Reinfr Rubber
19309180	Hose, fuel 575mm	7.5	14.5	21	0.7	575	Fabric Reinfr Rubber
51456404	Hose, fuel 610mm	7.5	14.5	21	0.7	610	Fabric Reinfr Rubber
51424762	Hose, fuel 660mm	7.5	14.5	21	0.7	660	Fabric Reinfr Rubber
51424764	Hose, fuel 700mm	7.5	14.5	21	0.7	700	Fabric Reinfr Rubber
51456405	Hose, fuel 720mm	7.5	14.5	21	0.7	720	Fabric Reinfr Rubber
47880050	Hose, fuel 735mm	7.5	14.5	21	0.7	735	Fabric Reinfr Rubber
48193594	Hose, fuel 830mm	7.5	14.5	21	0.7	830	Fabric Reinfr Rubber
91807713	Hose, fuel 865mm	7.5	14.5	21	0.7	865	Fabric Reinfr Rubber

Fiat 19225

DIN 911

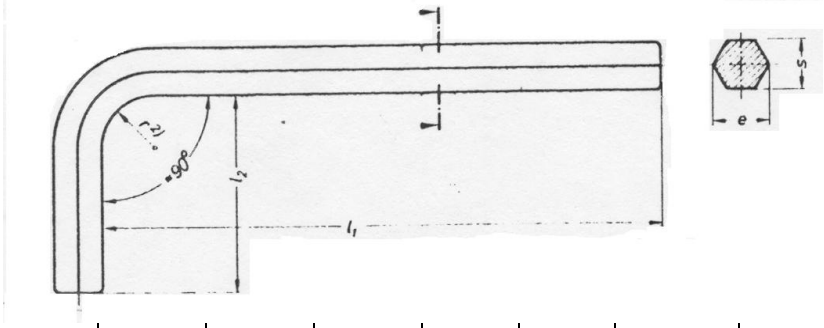

Part Number	Description	s	l1	l2				Material	Finish
87682399	WRENCH, ALLEN M3	3	63	20				AST	ZN
14534579	WRENCH, ALLEN M12	12	125	45				AST	ZN

Fiat 91107/13 Single Conductor Copper Cables w/Class T2 insulation

Material: Electrolytic Copper and Synthetic resin thermal plastic

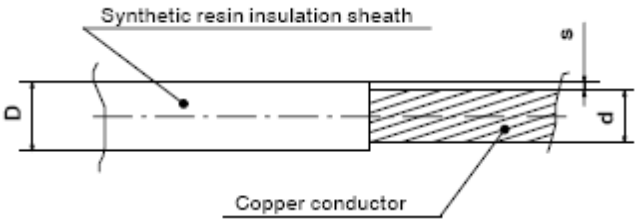

Part Number	Description	d	s	D	Material	Color
10630893	Cable, CU 0.5 PR BLUE	1	0.22	1.6	Insulated Copper	Blue
10645593	Cable, CU 1 PR GREY	1.35	0.24	2.1	Insulated Copper	Grey
10647493	Cable, CU 1 PR PINK	1.35	0.24	2.1	Insulated Copper	Pink
10658093	Cable, 1.5 CU PURPLE	1.7	0.24	2.4	Insulated Copper	Purple
10658193	Cable, 1.5 CU PURPLE	1.7	0.24	2.4	Insulated Copper	Purple
10663493	Cable, 2.5 CU GREY	2.2	0.28	3.0	Insulated Copper	Grey
10648693	Cable, 16 CU RED	5.6	1.6	9.0	Insulated Copper	Red

Fiat 91220 fixing clip

Mat plstc blk

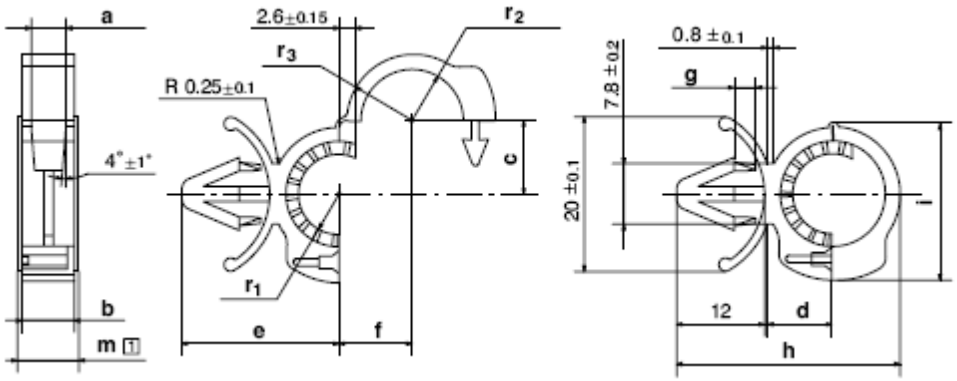

Part Number	Desc	r1	r2	r3	a	b	c	d	e	f	g	e	i	Mat	Fin
10323387		8.9	10.9	12.9	4.45	7	13.7	13.25	25.4	13.7	2.9	38.3	28.8	plstc	blk

Fiat 91220 Protective Sheaths for Wiring

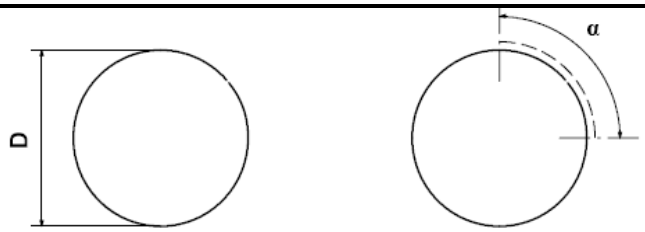

Part Number	Description	Supplier No	Matl	D	a	Finish
10600387	Tube Insulating	PLAS7NE070	T3	7,10,121	132%63%35%	Black

Fiat 91229 Sheet 5 Thin wall Heat-shrink sleeves with adhesive. Style TCC-125

Material Riticulated polyolefin plastic.

Color Black

Dimensions in mm

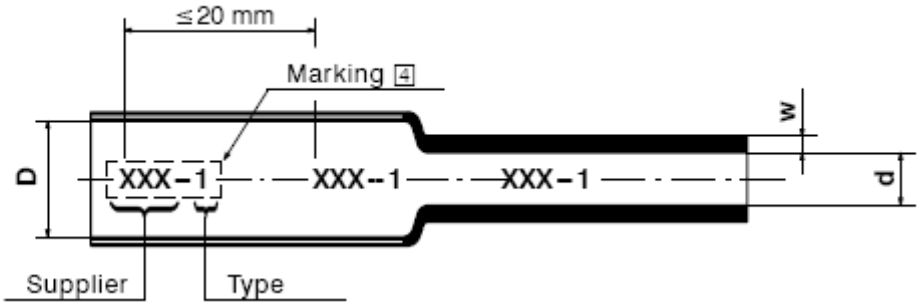

Part Number	Description	Designation	Marking	L Length	D ID Initial	d ID Shrunk	w Wall Thick	Material	Finish
10815887	Sleeve, Heat Sink TCC-5	TCC-5	XXX-5	45	19.5	2.5	2.35	Polyolefin	Black
19108887	Sleeve, Heat Sink 6/2	6/2	XXX-6/2		6	2	0.65	Polyolefin	Black

Fiat 91310 Sheet 2 Tube tongue terminal

Material Fiat 53550

CU 99.5 TUBO TRF DURO

Copper

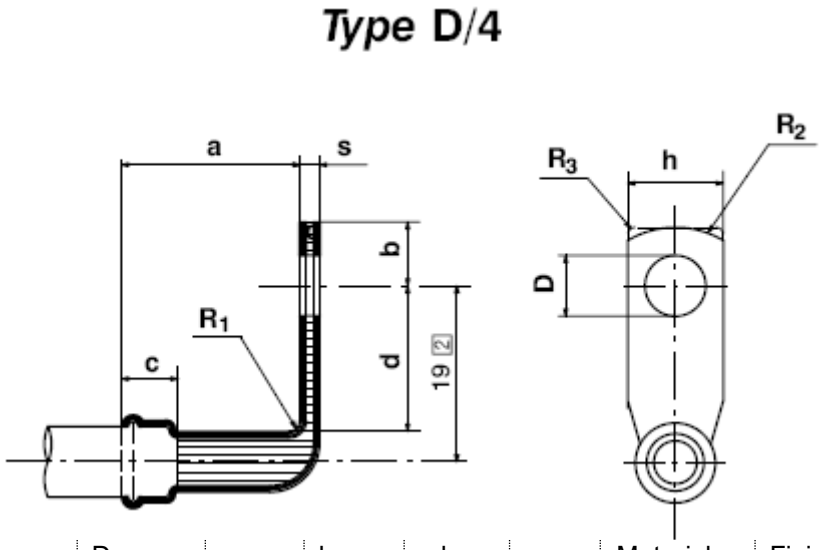

Part Number	Description	Type	D Screw Hole	a	b	cd		Material	Finish
10419264	Terminal, Type D/4 90 Deg 6x16	D/4	6.5	23	8.6	35.4		Copper	Cu/Sn/A

Fiat 91310 Sheet 2 Tube tongue terminal	Material Fiat 53438 Brass	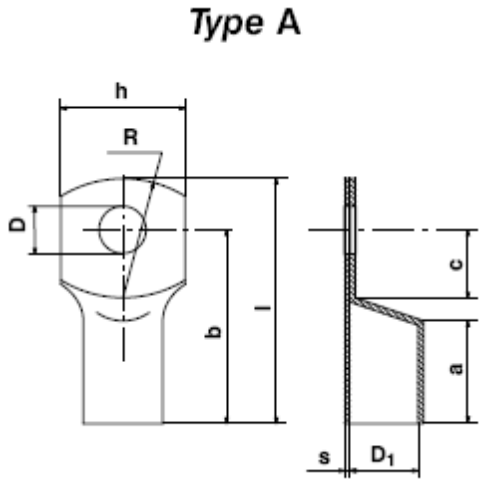										
Part Number	Description	D	D1	R	a	b	c	h	l	s	Material	Finish
10407344	Terminal, Type A 8 x 25	8.4	8	19	16	31	11	15	40	1	BRASS	Cu/Sn/A

Fiat 91328 Cable ties	Polyamide Plastic 55232	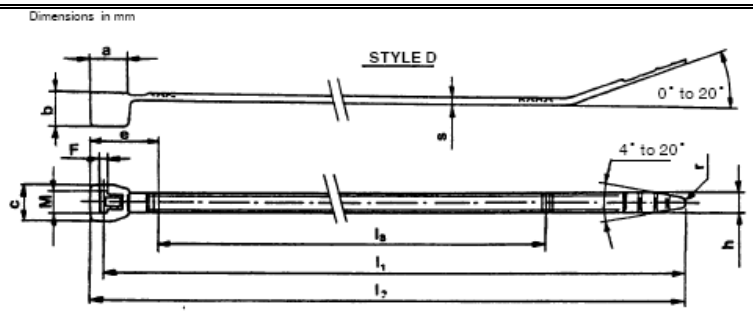			
Part Number	Description	L2	h	Color	Material
14560087	Tie, Cable 103mm	103	2.6	Black	Plastic
14560187	Tie, Cable 199mm	199	3.7	Black	Plastic
14560287	Tie, Cable 277mm	277	4.8	Black	Plastic

Fiat 91328 Cable ties	Polyamide Plastic 55232	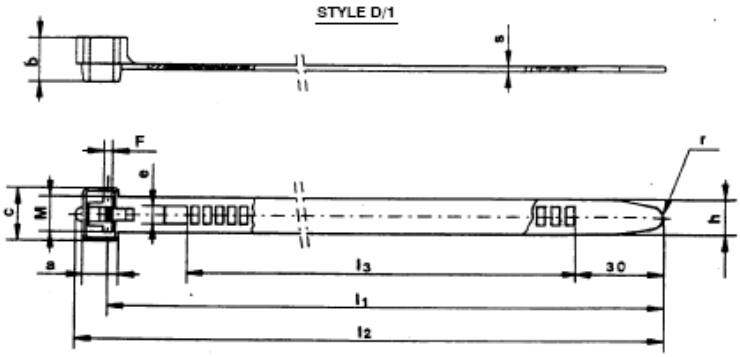				
Part Number	Description	L1	L2	L3	Color	Material
14560387	Tie, cable 330mm	371	380	330	Black	Plastic

Fiat 91328 Cable ties	Polyamide Plastic 55232	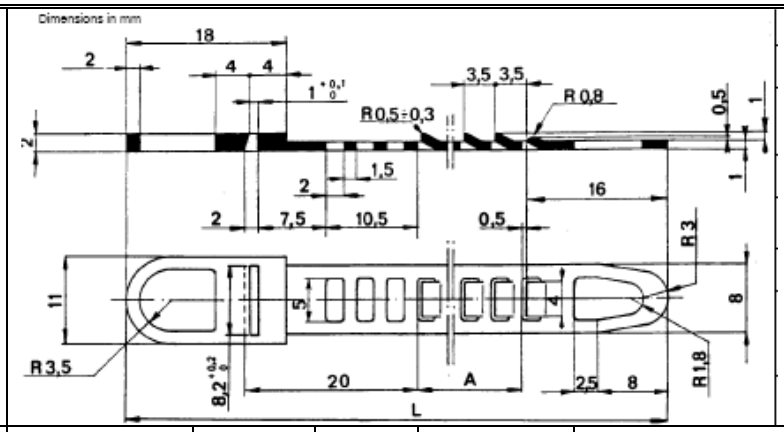

Part Number	Description	Designation	A	L	Color	Number of Teeth
14567787	STRAP, 126.5 black	126.5	77	126.5	black	22
14568387	STRAP, 200 black	200	150.5	200	black	43
14596187	STRAP, 270 black	270	220.5	270	black	63
14569387	STRAP, 385.5 black	385.5	336	385.5	black	96

Fiat 91328 Cable Ties	Amid Plastic 55232	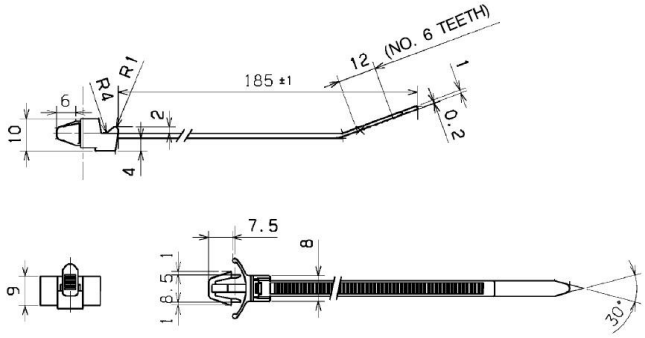

Part Number	Description	Designation	Matl	Color
10900987	CABLE TIE, 185 BLACK	185	NYLON	BLACK

Fiat 91332/48	WATER TIGHT CONNECTOR SERIES 150 SUPER SEAL	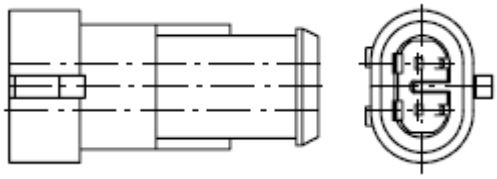

Part Number	Description	Style	Matl	Finish
12453183	CONNECTOR	2 WAY	AMIDE PLASTIC 55232	GREEN
12453186	CONNECTOR	2 WAY	AMIDE PLASTIC 55232	GREY
12453187	CONNECTOR	2 WAY	AMIDE PLASTIC 55232	BLACK

Fiat 91332/48	Tab Terminal Brass 53442	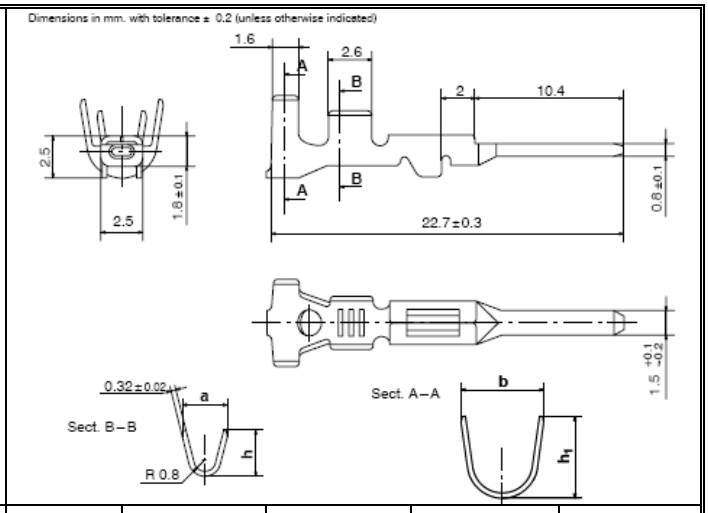				
Part Number	Description	Style	a	b	h	h1
12451944	Tab Terminal style B	B	3.2	5.2	3.3	4.7

Fiat 91351	Wire Terminals and Plug Seals Material TC 200-50	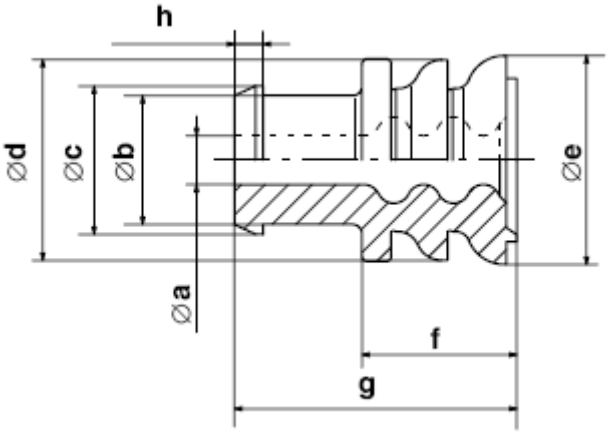								
Part Number	Description	a	b	c	d	e	f	g	h	Color
12308982	TERMINAL, TC 200-50	0.7	3.4	3.9	5.4	5.6	4.3	7.8	0.8	LT. Blue
12452181	TERMINAL, TC 200-50	1.4			5.9	6.1				Yellow

Fiat 91815
Blade Fuses for Electrical Systems w/insulating Body (picture to right show type c)

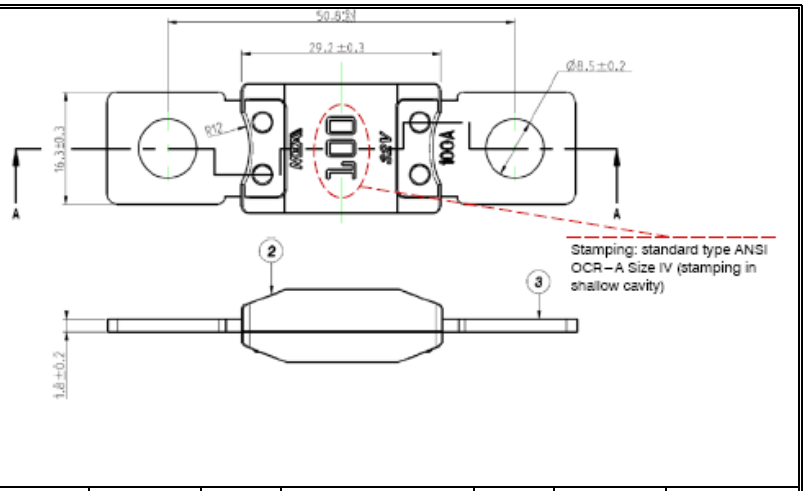

Part Number	Description	AMP	Color	Type	Mat. Symblo			
10404290	FUSE, 80 AMP Type co	80	white	co	PET GF30			
11056390	FUSE, 150 AMP Type c	150	Orange	C	PET GF30			
11056490	FUSE, 175 AMP Type c	175	WHITE	C	PET GF30			

Fiat Hitachi 2405/02 — Elbow, 45 37FL Metric Thread

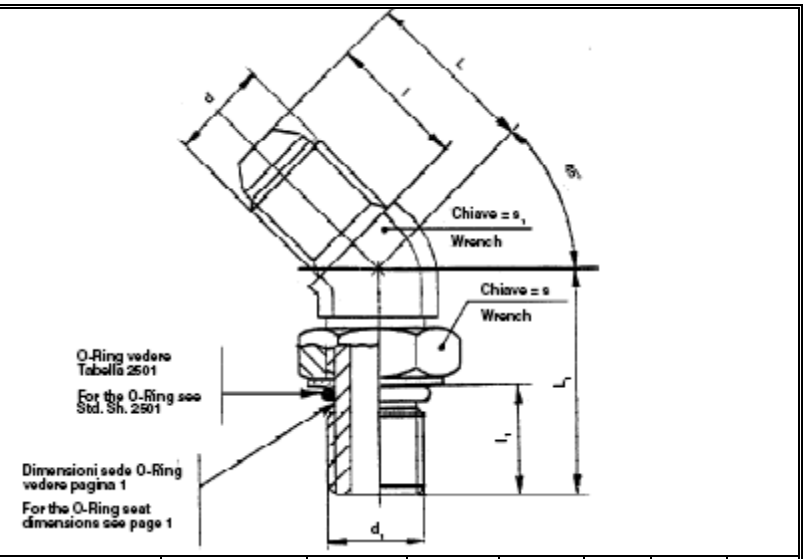

Part Number	Description	d	d1	L	L1	l	l1	S	S1
5167217	ELBOW, 37FL -10 MALE M22X1.5 ORB	7/8-14	M22X1.5	28	38.5	19.3	14	30	22
87625215	ELBOW, 37FL -12 MALE M22X1.5 ORB	1-1/16-12	M22X1.5	32.5	40.1			27	27

Fiat Hitachi 2405/02	Elbow, 90 37FL Metric Thread ISO 6149 ORB

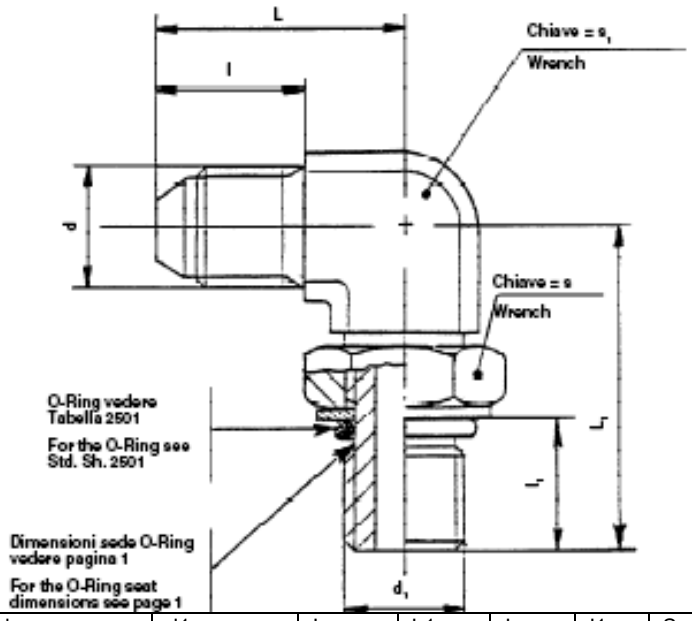

Part Number	Description	d	d1	L	L1	l	l1	S	S1
79067014	ELBOW, 37FL -04 MALE M10X1 ORB	7/16-20	M10X1	22.6	26	14	8	14	11
79067016	ELBOW, 37FL -05 MALE M12X1.5 ORB	1/2-20	M12x1.5	26.9	31.5	14	12	17	13
79067018	ELBOW, 37FL -06 MALE M14X1.5 ORB	9/16-18	M14X1.5	26,9	31.5	14.1	12	19	14
5158364	ELBOW, 37FL -10 MALE M22X1.5 ORB	7/8-14	M22x1.5	36.5	43	19.3	14	30	22
90403044	ELBOW, 37FL -12 MALE M22X1.5 ORG	1-1/16-12	M22X1.5	42.2	45	21.9	12.8	27	27
79067025	ELBOW, 37FL -05 MALE M27X2 ORB	1-1/16-12	M27x2	42.2	49	21.9	16	36	27

Fiat Hitachi 2405/02	Straight Long

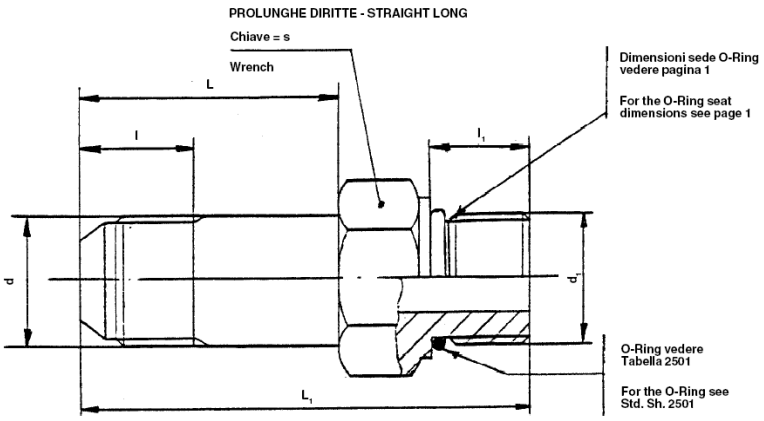

Part Number	Description	d	d1	L	L1	l	l1	S	
79066970	ADAPTER, ORB 9/16-18 M14X1.5	9/16-18	M14x1.5	39 opp 39.6 or	59	13.7	12	19	

IFI 524
STPC510
STPA020

Prevailing Torque Screws
Oval Countersunk Head Machine Screws
CNH Materials and Finishes.

Prevailing Torque Oval Head Machine Screw
with Non-Matallic Patch

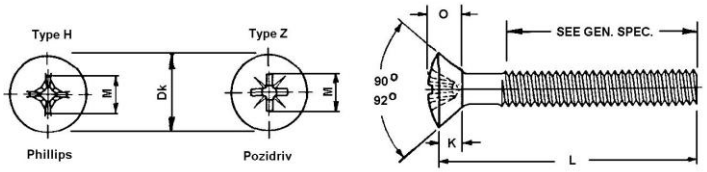

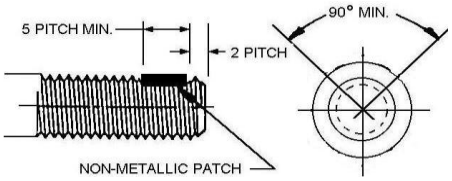

Part No	Description	Dia.	Len.		Mat.	Fin..
87645501	Screw, Oval Countersunk C/R-H W-Chem Patch	6	16		5.8	PHC
	M6 X 16 Full 5.8 PHC					
84257555	Screw, Oval Countersunk C/R-H W-Chem Patch	6	16		5.8	BGM
	M6 X 16 Full 5.8 BGM					
87645505	Screw, Oval Countersunk C/R-H W-Chem Patch	6	20		5.8	PHC
	M6 X 20 Full 5.8 PHC					
84257556	Screw, Oval Countersunk C/R-H W-Chem Patch	6	20		5.8	BGM
	M6 X 20 Full 5.8 BGM					
87645506	Screw, Oval Countersunk C/R-H W-Chem Patch	6	25		5.8	PHC
	M6 X 25 Full 5.8 PHC					
84263391	Screw, Oval Countersunk C/R-H W-Chem Patch	6	25		5.8	BGM
	M6 X 25 Full 5.8 BGM					

ISO 1179
Port
SAE J1453
F42EDMLO

*FOR
Pn/SA502025
-3842

CONNECTOR, MALE ORFS BSPP O.R.

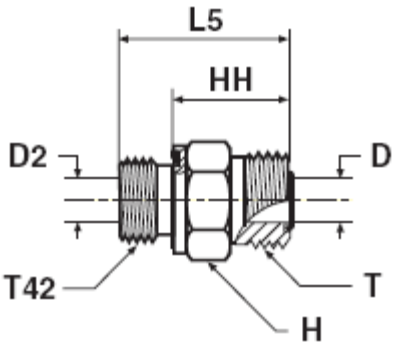

Std. O-Ring Fitting Part Number	Trapezoidal Seal Fitting Part No.	Description	BSPP T42	UN/UNF-2A T	H	HH	L5
47135740	92834327	Conn, 9/16-18 ORFS 1/4-19 BSPP ORB	1/4-19	9/16-18	19	18.5	30.5
47368443		Conn, 11/16-16 ORFS 1/4-19 BSPP ORB	1/4-19	11/16-16	19		31.5
76041699		Conn, 13/16-16 ORFS 1/4-19 BSPP ORB	1/4-19	13/16-16	22	28	38
91873521		Conn, 9/16-18 ORFS 1/8-28 BSPP ORB	1/8-28	9/16-18	17	17.7	25.7
87549590		Conn, 11/16-16 ORFS 1/8-28 BSPP ORB	1/8-28	11/16-16	19	23	31
91873522		Conn, 9/16-18 ORFS 3/8-19 BSPP ORB	3/8-19	9/16-18	22	19.6	31.6
84600280	92834351	Conn, 11/16-16 ORFS 3/8-19 BSPP ORB	3/8-19	11/16-16	22	21	33
92661331		Conn, 1-14 ORFS 3/8-19 BSPP ORB	3/8-19	1-14	27	31	43
47693301	92834328	Conn, 11/16-16 ORFS 1/2-14 BSPP ORB	1/2-14	11/16-16	27	23	37
87312333	92834219	Conn, 13/16-16 ORFS 3/8-19 BSPP ORB	3/8-19	13/16-16	22	23	35
76045654	92834346	Conn, 13/16-16 ORFS 1/2-14 BSPP ORB	1/2-14	13/16-16	27	24	38
92677647		Conn, 11/16-16 ORFS 3/4-14 BSPP ORB	3/4-14	11/16-16	32	24	40
84188738	92765929	Conn, 13/16-16 ORFS 3/4-14 BSPP ORB	3/4-14	13/16-16	32	26	42
48184022		Conn, 1-3/16-12 ORFS 3/4-14 BSPP ORB	3/4-14	1-3/16-12	32	30	46
92786715		Conn, 1-3/16-12 ORFS 1-11 BSPP ORB	1-11	1-3/16-12	41	31	49
48184021		Conn, 1-7/16-12 ORFS 3/4-14 BSPP ORB	3/4-14	1-7/16-12	41	36	50
91829128		Conn, 1-11/16-12 ORFS 3/4-14 BSPP ORB	3/4-14	1-11/16-12	46	35.5	49.5
84316432	92834330	Conn, 1-14 ORFS 1/2-14 BSPP ORB	1/2-14	1-14	27	27	41
71484828		Conn, 1-14 ORFS 3/4-14 BSPP ORB	3/4-14	1-14	36	29.5	43.5
47831583	92823857	Conn, 1-14 ORFS 1-11 BSPP ORB	1-11	1-14	41	30	48
79105687		Conn, 1-7/16-12 ORFS 1-11 BSPP ORB	1-11	1-7/16-12	41	32.5	48
91896395		Conn, 1-11/16-12 ORFS 1-11 BSPP ORB	1-11	1-11/16-12	46	39	57
47453070		Conn, 1-7/16-12 ORFS 1-1/4-11BSPP ORB	1-1/4-11	1-7/16-12	50	34	51.5
84593502*		Conn, 2-12 ORFS 1-1/4-11 BSPP ORB	1-1/4-11	2-12	55		53
92733869		Conn, 1-11/16-12 ORFS 1-1/2-11 BSPP ORB	1-1/2-11	1-11/16-12	55	35.6	57.6

ISO 1179 Port

FOR A503011

CONNECTOR, MALE BULKHEAD ORFS - MALE BSPP with O.R and Retaining Ring ISO 1179 Ports

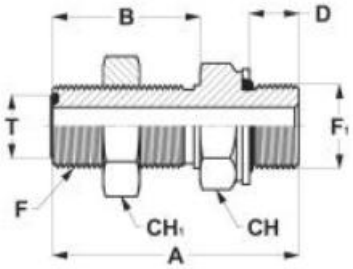

Part No.	F	F1	A	B	D	CH	CH1
92741739	13/16-16	G3/4-14 A	66	36.5	16	36	30

90 (ADJ) ELBOW MALE ORFS / MALE BSPP O. R. and Retaining Ring ISO 1179 Ports

FOR A507032

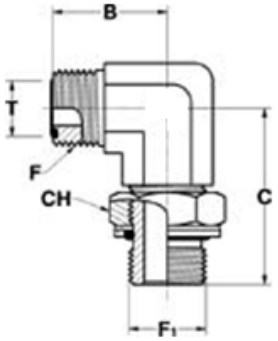

T		End Size		B	C	CH	Std. O-Ring Fitting Part Number	Trapezoidal Seal Fitting Part No.
MM.	IN	F – ORFS	F1 – BSPP GAS					
6	1/4	9/16-18	G1/4-19A	23.5	35	19	91743679	
8 – 10	5/16-3/8	11/16-16	G1/4-19A	25	36	19	71436868	92823842
8 – 10	5/16-3/8	11/16-16	G1/2-14A	30	50	27	47695904	
14 - 16	5/8	1-14	G3/8-19A	35	43	24	90403140	
14 - 16	5/8	1-14	G1/2-14A	33	49	27	48125191	
14 - 16	5/8	1-14	G3/4-14A	36	51.5	36	76054861	92834361
14 - 16	5/8	1-14	G1-11A	40	58	41	47906503	
18 - 20	3/4	1-3/16-12	G3/4-14A	37.5	51.5	36	76036879	
18 - 20	3/4	1-3/16-12	G1-11 A	41.5	58	41	500408047	
22 - 25	7/8 - 1	1-7/16-12	G3/4-14A	42	56	36	48184020	
22 - 25	7/8 - 1	1-7/16-12	G1-11 A	42	58	41	85809014	
28 - 32	1-1/4	1-11/16-12	G1-11 A	45	60	41	76069294	

ORFS Tube end / Female BSPP thread (1179-1)

Adapter (Ref: G4MLOSMO)

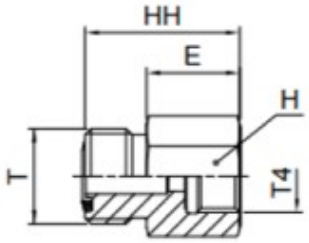

Tube OD		End Size		E	H	HH	Part Number
MM.	IN	T – ORFS	T4 BSPP				
8, 10	3/8	11/16-16	1/2-14	27	30	38	92673931

ISO 12151-2
90D SWEPT ELBOW
24D O-Ring Cone
Light Duty
DKOL90

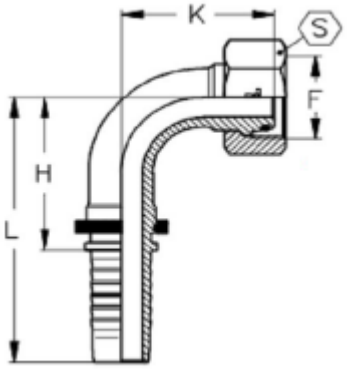

Part No.	Hose ID			Thread	Tube mm	H	L	K	S	Mat'l	Finish
	DN	Size	Inch								
	5	03	3/16	M12X1.5	6	27	52	28	14		
	5	03	3/16	M14X1.5	8	27	52	28	17		
	6	04	1/4	M12X1.5	6	26	53	26	17		
	6	04	1/4	M14X1.5	8	29	57	29	17		
	6	04	1/4	M16X1.5	10	29	57	30	19		
	6	04	1/4	M18X1.5	12	29	57	32	22		
	8	05	5/16	M16X1.5	10	31	59	33	19		
	8	05	5/16	M18X1.5	12	28	56	32	22		
	10	06	3/8	M16X1.5	10	31	61	31	19		
84544709	10	06	3/8	M18X1.5	12	31	61	33	22	STL	ZND
	10	06	3/8	M22X1.5	15	31	61	35	27		
	12	08	1/2	M22X1.5	15	37	70	38	27		
	12	08	1/2	M26X1.5	18	37	70	40	32		
	16	10	5/8	M26X1.5	18	44	80	45	32		
90367821	16	10	5/8	M30X2	22	44	80	47	36	STL	ZND
	20	12	3/4	M26X1.5	18	54	94	57	32		
90367822	20	12	3/4	M30X2	22	54	94	52	36	STL	ZND
	25	16	1	M36X2	28	70	121	66	41		
	32	20	1 1/4	M45X2	35	84	141	83	50		
	40	24	1 1/4	M52X2	42	100	164	100	60		

PARKER 30682-10-10	FEMALE 37 D CONNECTOR MALE BARB	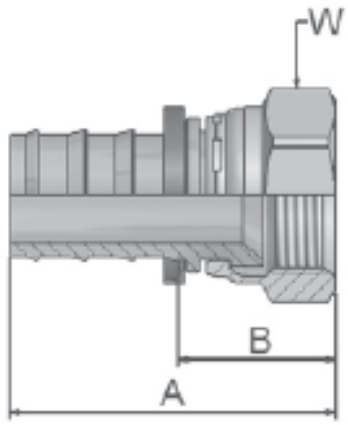			
Part Number	Description	LENGTH-A	LENGTH-B	SWIVEL-W	HOSE ID
87610700	5/8 HOSE X 5/8 ORB	2.54	1.09	7/8-14	5/8
920019329	32MM HOSE X 1-5/8			1-5/8-12	

Parker 14FSV 45 Degree Flare Swivel Nut Valve Connector SAE J513 Fig 010108	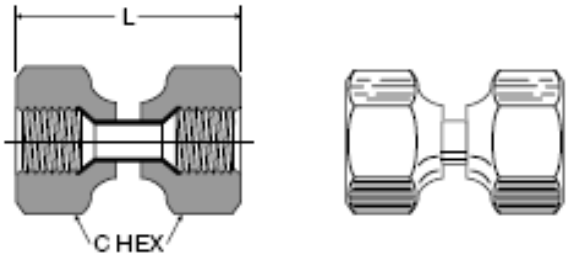				
Part Number	Description	Tube Size	StraightThread	C Hex	L length Min
87733375	Connector, 45D 3/8 Female Swivel	3/8	5/8-18	13/16	1.50

ISO 7380-2 Hex Socket Flange (Collar) Button Head Screws

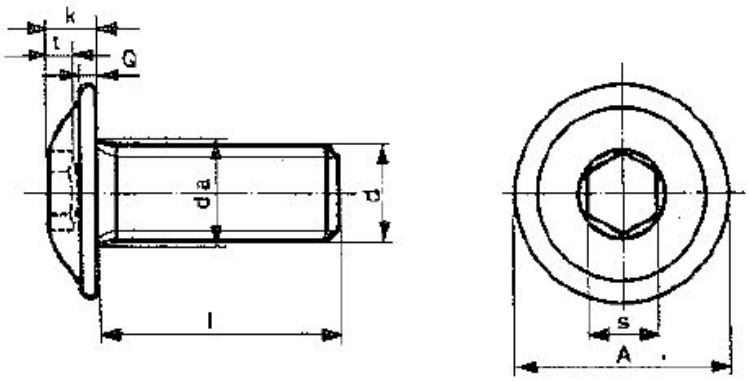

Part Number	Description	d	da max	l	A max	S	k max	t min	Q max	Mat	Fin
	Screw, M3	M3	3.6		6.9	2	1.65	1.04	0.7		
91804800	Screw, M4 x 10 10.9 BZN	M4	4.7	10	9.4	2.5	2.2	1.30	0.8	10.9	BZN
90359398	Screw, M4 x 16 SST BLO	M4	4.7	16	9.4	2.5	2.2	1.30	0.8	SST	BLO
51438606	Screw, M4 x 16 10.9 BZN	M4	4.7	16	9.4	2.5	2.2	1.30	0.8	10.9	BZN
92718063	Screw, M5 x 8 10.9 BZN	M5	5.7	8	11.8	3	2.75	1.56	1.0	10.9	BZN
91729880	Screw, M5 x 10 10.9 BZN	M5	5.7	10	11.8	3	2.75	1.56	1.0	10.9	BZN
1983571	Screw, M5 x 12 10.9 BZN	M5	5.7	12	11.8	3	2.75	1.56	1.0	10.9	BZN
51654431	Screw, M6 x 8 10.9 BZN	M6	6.8	8	13.6	4	3.3	2.08	1.2	10.9	BZN
2700886	Screw, M6 x 10 10.9 BZN	M6	6.8	10	13.6	4	3.3	2.08	1.2	10.9	BZN
2929630	Screw, M6 x 12 8.8 ZN	M6	6.8	12	13.6	4	3.3	2.08	1.2	8.8	ZN
920019745	Screw, M6 x 12 8.8 BZN	M6	6.8	12	13.6	4	3.3	2.08	1.2	8.8	BZN
91902900	Screw, M6 x 12 8.8 BGM	M6	6.8	12	13.6	4	3.3	2.08	1.2	8.8	BGM
87698795	Screw, M6 x 12 10.9 BZN	M6	6.8	12	13.6	4	3.3	2.08	1.2	10.9	BZN
90391787	Screw, M6 x 12 10.9 DAC	M6	6.8	12	13.6	4	3.3	2.08	1.2	10.9	DAC
47980870	Screw, M6 x 12 SST PLN	M6	6.8	12	13.6	4	3.3	2.08	1.2	SST	PLN
48032018	Screw, M6 x 16 SST BLO	M6	6.8	16	13.6	4	3.3	2.08	1.2	SST	BLO
1983037	Screw, M6 x 16 10.9 BZN	M6	6.8	16	13.6	4	3.3	2.08	1.2	10.9	BZN
90399799	Screw, M6 x 16 10.9 BGM	M6	6.8	16	13.6	4	3.3	2.08	1.2	10.9	BGM
90391788	Screw, M6 x 16 10.9 DAC	M6	6.8	16	13.6	4	3.3	2.08	1.2	10.9	DAC
91748316	Screw, M6 x 20 8.8 BGM	M6	6.8	20	13.6	4	3.3	2.08	1.2	8.8	BGM
92088187	Screw, M6 x 20 10.9 BGM	M6	6.8	20	13.6	4	3.3	2.08	1.2	10.9	BGM
87698793	Screw, M6 x 20 10.9 BZN	M6	6.8	20	13.6	4	3.3	2.08	1.2	10.9	BZN
90391789	Screw, M6 x 20 10.9 DAC	M6	6.8	20	13.6	4	3.3	2.08	1.2	10.9	DAC
47980873	Screw, M6 x 20 SST PLN	M6	6.8	20	13.6	4	3.3	2.08	1.2	SST	PLN
90329586	Screw, M6 x 20 SST BLO	M6	6.8	20	13.6	4	3.3	2.08	1.2	SST	BLO

ISO 7380-2 (Cont'd) Hex Socket Flange (Collar) Button Head Screws

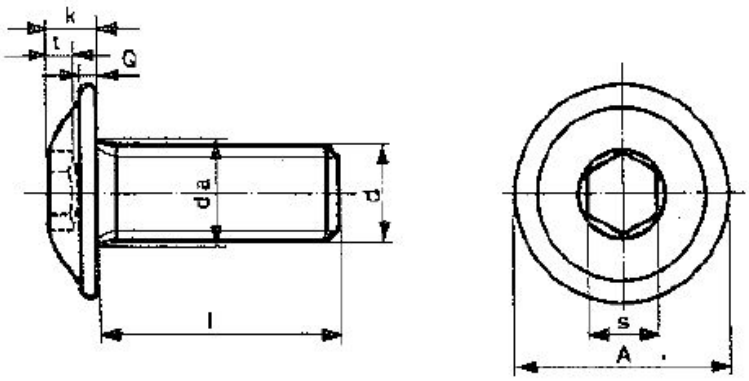

Part Number	Description	d	da max	l	A max	S	k max	t min	Q max	Mat	Fin
90333080	Screw, M6 x 25 SST PLN	M6	6.8	25	13.6	4	3.3	2.08	1.2	SST	PLN
90333082	Screw, M6 x 25 SST BLO	M6	6.8	25	13.6	4	3.3	2.08	1.2	SST	BLO
92126221	Screw, M6 x 25 8.8 BGM	M6	6.8	25	13.6	4	3.3	2.08	1.2	8.8	BGM
91796025	Screw, M6 x 25 12.9 BLO	M6	6.8	25	13.6	4	3.3	2.08	1.2	12.9	BLO
47692048	Screw, M6 x 26 8.8 ZND	M6	6.8	26	13.6	4	3.3	2.08	1.2	8.8	ZND
1983528	Screw, M6 x 30 10.9 BZN	M6	6.8	30	13.6	4	3.3	2.08	1.2	10.9	BZN
^90337256	Screw, M6 x 30 10.9 BZN	M6	6.8	30	13.6	4	3.3	2.08	1.2	10.9	BZN
^92171457	Screw, M6 x 30 10.9 BGM	M6	6.8	30	13.6	4	3.3	2.08	1.2	10.9	BGM
92115298	Screw, M6 x 35 8.8 BGM	M6	6.8	35	13.6	4	3.3	2.08	1.2	8.8	BGM
2247675	Screw, M6 x 40 10.9 BZN	M6	6.8	40	13.6	4	3.3	2.08	1.2	10.9	BZN
51451688	Screw, M8 x 10 8.8 ZND	M8	9.2	10	17.8	5	4.4	2.60	1.5	8.8	ZND
90423995	Screw, M8 x 12 8.8 BGM	M8	9.2	12	17.8	5	4.4	2.60	1.5	8.8	BGM
920019109	Screw, M8 x 12 8.8 ZND	M8	9.2	12	17.8	5	4.4	2.60	1.5	8.8	ZND
48113389	Screw, M8 x 12 10.9 BLO	M8	9.2	12	17.8	5	4.4	2.60	1.5	10.9	BLO
47915385	Screw, M8 x 12 SST	M8	9.2	12	17.8	5	4.4	2.60	1.5	SST	PLN
84213875	Screw, M8 x 16 SST	M8	9.2	16	17.8	5	4.4	2.60	1.5	SST	PLN
90420793	Screw, M8 x 20 10.9 BGM	M8	9.2	20	17.8	5	4.4	2.60	1.5	10.9	BGM
2929702	Screw, M8 x 20 10.9 ZN	M8	9.2	20	17.8	5	4.4	2.60	1.5	10.9	ZN
90391790	Screw, M8 x 20 10.9 DAC	M8	9.2	20	17.8	5	4.4	2.60	1.5	10.9	DAC
90393120	Screw, M8 x 20 SST BLO	M8	9.2	20	17.8	5	4.4	2.60	1.5	SST	BLO
920019731	Screw, M8 x 20 SST PLN	M8	9.2	20	17.8	5	4.4	2.60	1.5	SST	PLN
920019499	Screw, M8 x 25 10.9 BZN	M8	9.2	25	17.8	5	4.4	2.60	1.5	10.9	BZN
92167906	Screw, M8 x 25 10.9 ZND	M8	9.2	25	17.8	5	4.4	2.60	1.5	10.9	ZND
84213876	Screw, M8 x 25 SST	M8	9.2	25	17.8	5	4.4	2.60	1.5	SST	PLN

^With non-metallic patch per IFI 524; patch to be applied to minimum of 5 pitches, min 90° of circumference starting 2 pitches from end.

ISO 7380-2 (Cont'd)	Hex Socket Flange (Collar) Button Head Screws	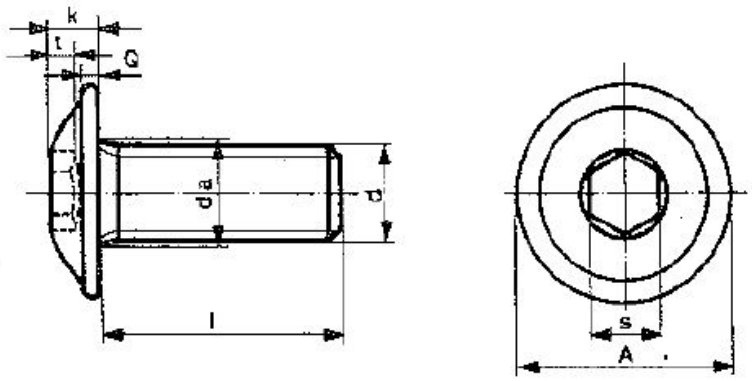

Part Number	Description	d	da max	l	A max	S	k max	t min	Q max	Mat	Fin
920019472	Screw, M8 x 30 SST	M8	9.2	30	17.8	5	4.4	2.60	1.5	SST	PLN
47809053	Screw, M8 x 40 SST	M8	9.2	40	17.8	5	4.4	2.60	1.5	SST	PLN
51468646	Screw, M8 x 40 10.9 BZN	M8	9.2	40	17.8	5	4.4	2.60	1.5	10.9	BZN
51554903	Screw, M8 x 45 10.9 BZN	M8	9.2	45	17.8	5	4.4	2.60	1.5	10.9	BZN
84324530	Screw, M8 x 50 SST	M8	9.2	50	17.8	5	4.4	2.60	1.5	SST	PLN
51554905	Screw, M8 x 50 10.9 BZN	M8	9.2	50	17.8	5	4.4	2.60	1.5	10.9	BZN
51682733	Screw, M8 x 50 10.9 BGM	M8	9.2	50	17.8	5	4.4	2.60	1.5	10.9	BGM
92736866	Screw, M8 x 60 10.9 BGM	M8	9.2	60	17.8	5	4.4	2.60	1.5	10.9	BGM
92736868	Screw, M8 x 65 10.9 BGM	M8	9.2	65	17.8	5	4.4	2.60	1.5	10.9	BGM
90355048	Screw, M8 x 75 A2-70 BLO	M8	9.2	75	17.8	5	4.4	2.60	1.5	A2-70	BLO
90326635	Screw, M8 x 80 A2-70 BLO	M8	9.2	80	17.8	5	4.4	2.60	1.5	A2-70	BLO
90355049	Screw, M8 x 75 A2-70 PLN	M8	9.2	75	17.8	5	4.4	2.60	1.5	A2-70	PLN
90326648	Screw, M8 x 80 A2-70 PLN	M8	9.2	80	17.8	5	4.4	2.60	1.5	A2-70	PLN
48056828	Screw, M8 x 85 SST	M8	9.2	85	17.8	5	4.4	2.60	1.5	SST	PLN
48069468	Screw, M8 x 90 SST	M8	9.2	90	17.8	5	4.4	2.60	1.5	SST	PLN
51512434	Screw. M10x30 10.9 BZN	M10	11.2	30	21.9	6	5.5	3.12	2.0	10.9	BZN
90513023	Screw, M10x55 10.9 ZND	M10	11.2	55	21.9	6	5.5	3.12	2.0	10.9	ZND

Pipe Plugs with BSPT, BSPP/BSPF threads STL

86557412 is not pictured

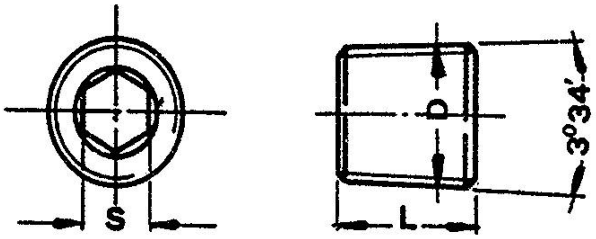

Part Number	Description	S	D	L	MTL
84378596	Plug, 1/8-28 BSPT Pipe	5	R1/8	8	CST
84378597	Plug, 1/4-19 BSPT Pipe	7	R1/4	10	CST
84378598	Plug, 1/2-14 BSPT Pipe	10	R1/2	10	CST
86539149	Plug, G3/8 BSPP/BSPF Pipe	5/16	3/8	14.5	STL
71404856	Plug, G3/8 BSPP/BSPF Pipe	8MM	3/8	10.1	CST
86557412	Plug, G3/8 BSPP/BSPF Pipe w/HEX-HD	12.7MM	3/8	20	STL
84378600	Plug, 3/4-14 BSPT Pipe	12	R3/4	12	CST

Banjo Sealing Washer (Dowty)

Iveco 98474302
Drawing 87665411

Material:
R50 Per Iveco 15-2605, Finish Fe/ZnNi 7 per 9.57409, Treatment #45 per GB/T699-2015. Rubber side NBR per Iveco 18-0484

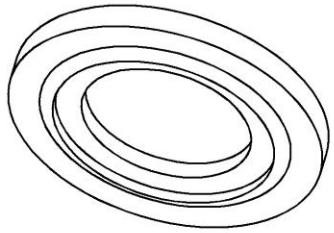

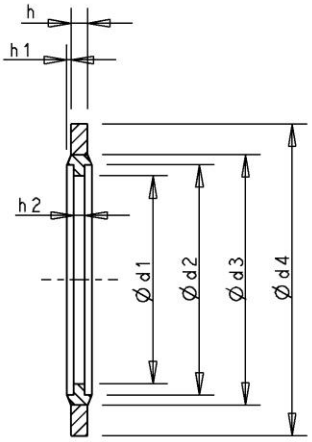

Part Number	Description	dn	d1	d2	d3	d4	h	h1	h2
87316678	Washer, M10	10		10.7	12.4	16	1.5	0.4	-
5183780	Washer, M12	12	9.73	12.7	14.4	18	1.5	0.4	-
87356828	Washer, M12	12	12	14	15.4	20	1.5	0.4	-
5169544	Washer, M14	14	11.38	14.7	16.4	22	1.5	-	-
44906168	Washer, M14	14	-	14.86	-	22.23	2.03	-	-
5167639	Washer, M16	16	13.4	16.7	18.4	24	1.5	-	-
5167640	Washer, M18	18	14.75	18.7	20.45	26	1.5	-	-
5186176	Washer, M18	18	15.8	19.69	21.21	26.92	1.5	0.4	-
5188717	Washer, M20	20	16.76	20.7	22.5	28	1.5	0.4	-
5165897	Washer, M22	22	18.74	22.7	24.4	30	2	-	-
5177224	Washer, M24	24	20.11	24.7	26.4	32	2	0.4	-
47124968	Washer, M27 (7/8 BSP)	27	27.51	30.81	32.29	38.1	2.47	-	-
5188035	Washer, M33	33	30.3	33.88	36.88	42.8	2.5	0.5	-
87665411	Washer, M6	6	5.1	8.2	9.7	12	1.5	0.4	0.5
87667800	Washer, M8	8	8	9.3	10.4	14	1.5	0.4	0.5
87665412	Washer, M8	8	7	10.2	11.7	14	1.5	0.5	0.5
87667802	Washer, M10	10	10	12	13.5	17	1.5	0.4	0.5
87665413	Washer, M10	10	7.9	11.5	13	17	1.5	0.5	0.5
87667803	Washer, M12	12	12	14	15.4	20	1.5	0.4	0.7
87665414	Washer, M12	12	9.9	13.5	15	20	1.5	0.5	0.7
87667804	Washer, M14	14	14	16	17.5	22	1.5	0.4	0.7
87665415	Washer, M14	14	11.9	15.5	17	22	1.5	0.5	0.7
87667805	Washer, M16	16	16	18	19.5	24	1.5	0.4	0.7
87665416	Washer, M16	16	13.9	17.5	19	24	1.5	0.5	0.7

Banjo Sealing Washer (Dowty)

Iveco 98474302
Drawing 87665411

Material:
R50 Per Iveco 15-2605, Finish Fe/ZnNi 7 per 9.57409, Treatment #45 per GB/T699-2015. Rubber side NBR (38% ACN) per Iveco 18-0484

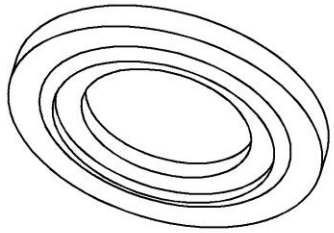

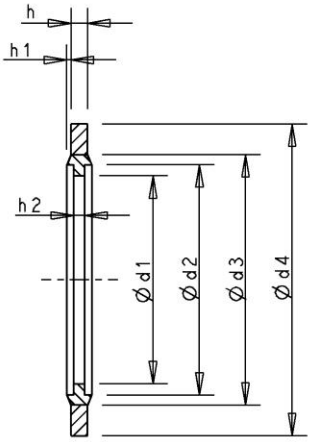

Part Number	Description	dn	d1	d2	d3	d4	h	h1	h2
87667806	Washer, M18	18	18	20.5	22	26	1.5	0.4	0.7
87495058	Washer, M18	18	15.4	19.4	21.3	26	1.5	0.5	0.7
*92184990	Washer, M18 BGM	18	15.4	19.4	21.3	26	1.5	0.5	0.7
87667807	Washer, M20	20	20	22.5	24	28	1.5	0.4	0.7
87665417	Washer, M20	20	18.1	22.5	24	28	1.5	0.5	0.7
87667808	Washer, M22	22	22	24.5	26	30	1.5	0.4	0.7
87665418	Washer, M22	22	19.4	23.5	25	30	1.5	0.5	0.7
87332142	Washer, M22 (San Matteo)	22	19.4	23.5	25	30	1.5	0.5	0.7
87667809	Washer, M24	24	24	26.5	28	33	1.5	0.4	0.7
87665419	Washer, M24	24	21.4	25.5	27	33	1.5	0.5	0.7
87667810	Washer, M26	26	26	28.5	30	36	1.5	0.4	0.7
87665420	Washer, M26	26	23.4	27.5	29	36	1.5	0.5	0.7
47951864	Washer, M27	27	23.3	27.2	29	36	2	0.4	0.7
87380329	Washer, M28	28	26	30.5	32	38	1.5	0.4	0.7
87665422	Washer, M30	30	28	32.5	34	40	1.5	0.4	0.7
87665423	Washer, M32	32	30	34.5	36	42	2	0.4	0.7
87665424	Washer, M35	35	33	37.5	39	45	2	0.4	0.7
87665425	Washer, M40	40	38	42.5	44	50	2	0.4	0.7
87665426	Washer, M42	42	40	44.5	46	52	2	0.4	0.7
87665427	Washer, M52	52	50.4	54.9	58.3	69.8	3.4	0.4	0.7
5170555	Washer, 1/2 INCH	1/2	18.64	21.54	23.01	28.58	2.5	-	-
47547575	Washer, 3/8 INCH	3/8	10.37	-	11.84	15.88	2.0	0.38	-
47547480	Washer, 7/16 INCH	7/16	11.69	-	13.08	19.05	2.0	0.38	-
81802146	Washer, 3/4 INCH	3/4	19.65	-	21.2	27	2.46	0.38	-

*BGM Finish per STPA020

Composite Sealing Washer Parker WZ Series	Material STL 1.0330, Heavy build Passivated. Elastomer Sealing Lip NBR.		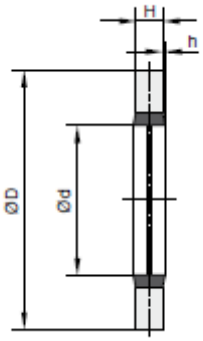			
Part Number	BSP	Bolt	D(inch)	d (inch)	H (inch)	h (inch)
7000600977	1/8	3/8	0.625	0.408	0.080	0.010
47490068	1/4	1/2	0.810	0.541	0.080	0.010
47490084	3/8	-	0.937	0.680	0.080	0.010
47490086	1/2	13/16	1.125	0.848	0.098	0.010
47490126	3/4	1	1.375	1.065	0.098	0.010
47552612	1	1-5/16	1.685	1.334	0.098	0.010
92726545	1-1/4	1-5/8	2.062	1.690	0.098	0.010
92726546	1-1/2	1-7/8	2.307	1.907	0.098	0.010

Hex Head Pipe Plugs with BSPT threads			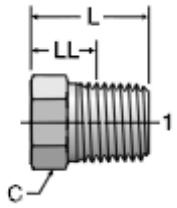			
Part #	1 (BSPT)	C (HEX)	L (mm)	LL(mm)	Material	Finish
47828978	1/4-19	14	19.1	10.5	STL	ZND

Tapping Screw – Hex Head and Conical Washer assembly – Light Regular Washer
Material ES-21004-S100
Finish: ZND

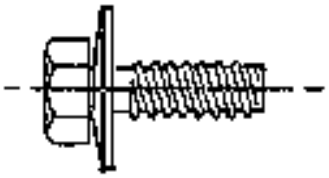

Part Number	Dia	Length mm	Head Height mm	Width Across Flats (mm)	Width Across Corners (mm)	Point	Washer OD (mm)	Washer Thickness (mm)	Washer Crown Height (mm)
83929012	M6.3 x 1.81	20	4.83 4.37	10.00 9.78	10.89 (Min.)	Type B	19.43 18.87	1.42 1.19	0.84 0.58

Banjo Bolts (Ref: Iveco 4864076)
Material: 5.8
Finish: DAC

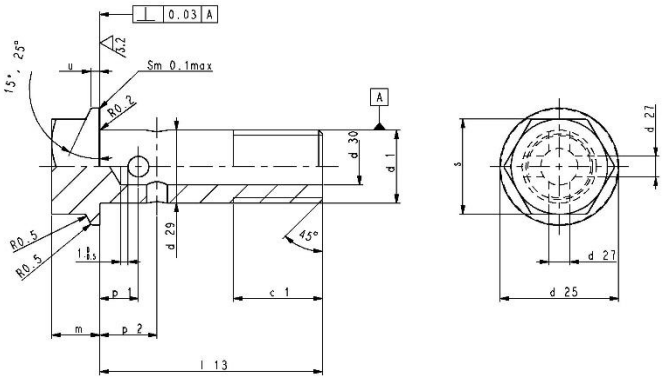

Part Number	Pipe	d_1	C 1	l13	d25	d27	d28	d29	d30	m	p1	p2	p3	s	u
87736832	4/4.76	M8X1	10	18	13	-	2.5	8	4	6	-	-	5.5	10	1.1
87736833	4/4.76	M8X1.25	10	18	13	-	2.5	8	4	6	-	-	5.5	10	1.1
87736834	6	M8X1.25	12	22	13	-	2.5	8	4	6	-	-	5.5	10	1.1
87736835	6	M10X1	9.5	20	16	2.8		10	5	6.5	4.7	7.2		13	1.2
87736836	6	M10X1.25	11	21	16	2.8		10	5	6.5	4.7	7.2		13	1.2
87736837	6	M10X1.5	11	21	16	2.8		10	5	6.5	4.7	7.2		13	1.2
87736838	6	M10X1.5	12	30	16	2.8		10	5	6.5	5.2	7.7		13	1.2
87736839	8	M12X1.5	12	25	18	3.5		12	6	7.8	6	9		15	1.5
87736840	10	M14X1.5	14	30	21	4.5		14	8	8.3	6.8	10.8		15	1.6
87736841	12	M16X1.5	15	34	23	5.5		16	10	9.3	7.5	13		17	1.8
87736842	12	M16X1.5	15	37	23	5.5		16	10	9.3	7.5	13		17	1.8
87736843	15	M18X1.5	17	40	25	7		18	13	10.5	8.5	15.5		19	2.1
87736844	15	M20X1.5	19	42	27	7		20	14	11.3	8.5	15.5		21	2.2
87736845	18	M24X1.5	23	50	32	8.5		24	16	13	9.5	18.5		24	2.5
87736846	22	M26X1.5	25	56	35	10.5		26	20	14	11	23		27	2.8

Banjo Bolts Non-Standard

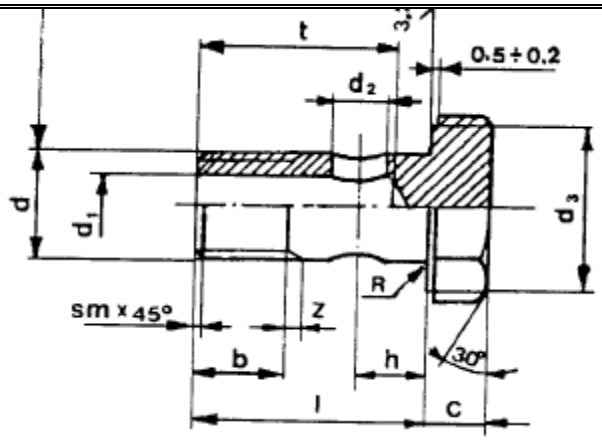

Part Number	d	l	c	D3	D2	D1	r	t	h	b	sm	ch
5176180	M10 x 1	21	5	13	3	5	-	17.5	6	11	1	13
5155703	M12 x 1.25	22	6	17	4	6	0.2	18	7	10	1.25	17
5105699	M18 x 1.5	28	6	24	7	10	0.2	24	-	13	1.5	24
5170235	M18 x 1.5	35	6	24	8.5	10	0.2	29	12.5	13	1.5	24
92184029	M18 x 1.5	35	6	24	8.5	10	0.2	29	12.5	13	1.5	24
5174642	M18 x 1.5	51	6.5	24	8.5	10.5	-	40	16	16	-	24
84474995	M22 x 1.5											
5154558	M22 x 1.5	46	7	32	10.5	14	-	38.5	14	19	-	30
5194391	M22 x 1.5	56	8	30	8.5	14	0.2	42	21	17	1	30
# 82824891	M18X1.5	37	8	24	6	10	0.2	35	9.5	21	1.5	24

Part Number	Material	Finish
5176180	Fiat 52606 - 9 SMn Pb 28, 9 SMn Pb 36, 35 SMn Pb10; SAE 1212	ZND
5155703	Fiat 52606 - 9 SMn Pb 28	ZND
5105699	Fiat 52605 - R 50	ZND
5170235	Fiat 52605/01 - R 50	ZND
92184029	Fiat 52605/01 - R 50	BGM
5174642	Fiat 52606 - 9 SMn Pb 28	ZND
84474995	Fiat 52606 - 9 SMn Pb 28	ZND
5154558	Fiat 52605/01 - R 50	ZND
5194391	Fiat 52606 - 9 SMn Pb 28	ZND
# 82824891	Fiat 52605/01 - R 50	ZND

Bolt, Banjo two-way - Not Pictured

Coupling,
Banjo
Iveco
4864061

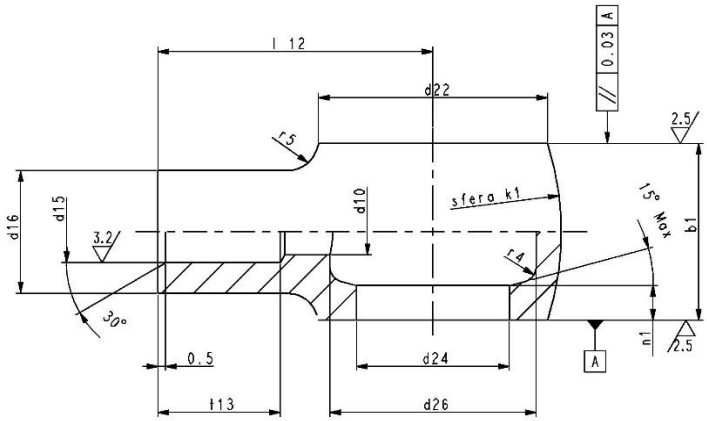

Part Number	Pipe Dia	b1 +0.3 0	d10 +0.3 0	d15	d16 h11	d22	d24 D11	d26 0 -0.3	k1 0 -0.2	l12 ±0.3	n1 ±0.1	r4	r5	t13 +0.2 0
87738975	4	8	3	4	8	13.7	8	11	16	17	2	1	2	8
87738980	4	10	3	4	8	16	10	13.5	19	18	2.25	1	2	8
87738992	4	11.5	3	4	8	15	10	13.5	19	18	2.25	1	2	8
87738993	4.76	8	3.5	4.76	8	13.7	8	11	16	17	2	1	2	8
87738994	6	10	4	6	9	16	10	13.5	19	18	2.25	1	2	8
87738995	6	10	4	6	9	13.7	8	11	16	17	2	1	2	8
87738996	6	12	4	6	9	19.5	12	17	23	22	2.5	1.5	2.5	8
87738997	6	17.5	4	6	11	20.5	14	19.5	27	26	2.75	1.5	2.5	8
87738998	8	12	6	8	11	19.5	12	17	23	22	2.5	1.5	2.5	8
87739780	8	14	6	8	11	18	12	17	23	22	2.5	1.5	2.5	8
87738999	8	15	6	8	11	21	14	19.5	26	26	2.75	1.5	2.5	8
87739000	8	17.5	6	8	11	20.5	14	19.5	27	26	2.75	1.5	2.5	8
87739001	10	15	8	10	13	21	14	19.5	26	26	2.75	1.5	2.5	8
87739013	10	15	8	10	13	21	12	19.5	26	26	2.75	1.5	2.5	8
87739014	10	18	8	10	13	20	14	19.5	27	26	2.75	1.5	2.5	8
87739015	10	18	8	10	13	23.7	16	23	31	30	3	1.5	2.5	10
87739016	12	18	10	12	15	23.7	16	23	30	30	3	1.5	2.5	10
84312242	12	18								30				
87739017	12	20	10	12	15	23.7	16	23	31	30	3	1.5	2.5	10
87739018	12	22	10	12	15	27	18	27.5	35	35	3.25	1.5	3	10
87739019	13.3	18	11.5	13.3	17	23.7	16	23	30	25	3	1.5	2.5	10
87739020	13.3	26	11.5	13.3	17	27	18	27.5	37	30	3.25	1.5	3	10
87739021	15	22	13	15	19	27	16	26.5	35	35	3.25	1.5	3	10
87739022	15	22	13	15	19	27	18	27.5	35	35	3.25	1.5	3	10

Coupling,
Banjo
Iveco
4864061

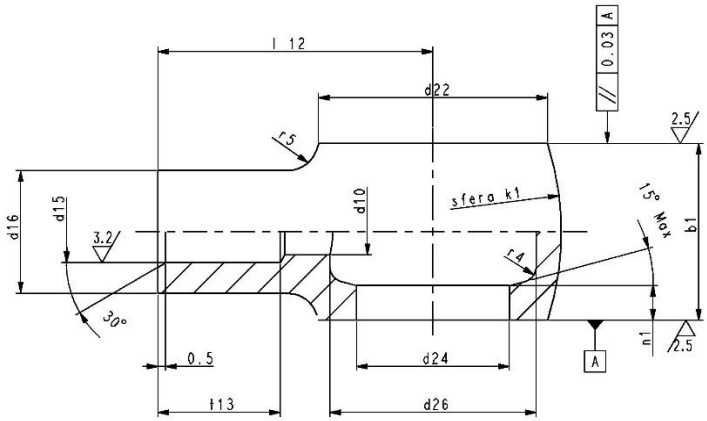

Part Number	Pipe Dia	b1 +0.3 0	d10 +0.3 0	d15	d16 h11	d22	d24 D11	d26 0 -0.3	k1 0 -0.2	l12 ±0.3	n1 ±0.1	r4	r5	t13 +0.2 0
87739023	15	22	13	15	19	30	20	29.5	40	35	3.25	1.5	3	10
87739024	16	22	13	15	19	30	20	29.5	40	35	3.25	1.5	3	10
5121759	16	22	13	16.2	19	28.3	22.3	29	36	32	2.15	2	0.5	16
82031545	16	28								32				
87739025	18	26	16	18	22	34.4	24	36	47	37	3.5	1.5	3	10
47962536	18	25	16	18.15	21		22		39	27		2.5		
87739026	22	30	20	22	27	46	26	41.5	55	41	3.75	1.5	3	10

Mounting Trim Fasteners

Material: Plastic
Refer to Dwg 83998841

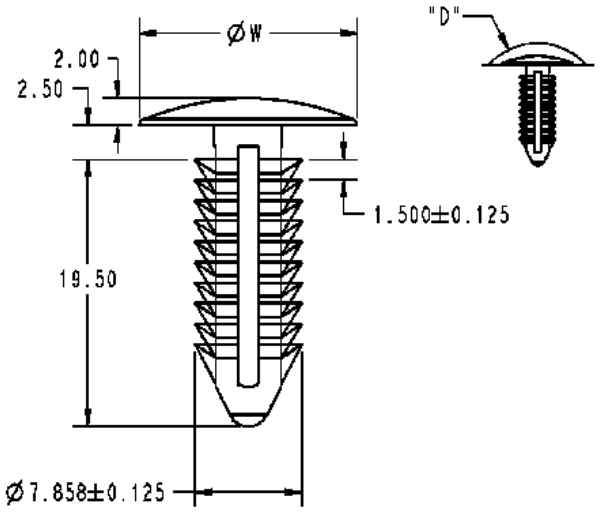

Part Number	Color				
87648059	NH Grey				
82023460	Wheat Grey				
81870039	Black				
82003599	Brown				
83998841	Grey RAL 7015				

24 Degree Cone End EO 24 Degree DKO Swivel

Parker EL Swivel run tee (Light Series L)

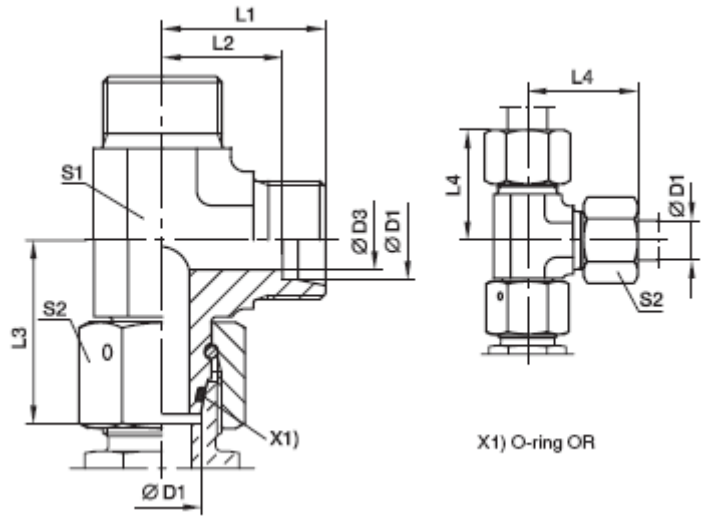

Part Number	Threads	D1	D3	L1	L2	L3	L4	S1	S2	Mat/Fin
85826461	M14X1.5	8	6	21	14	27.5	29	12	17	STL ZND
1983889	M16X1.5	10	8	22	15	29	30	14	19	STL ZND
84151577	M18X1.5	12	10	24	17	29.5	32	17	22	STL ZND
84151578	M22X1.5	15	12	28	21	32.5	36	19	27	STL ZND
84145998	M26X1.5	18	15	31	23.5	35.5	40	24	32	STL ZND
92661327	M30X2	22	19	35	27.5	38.5	44	27	36	STL ZND
51487167	M45X2	35	30	45	34.5	51	56	41	50	STL ZND

24 Degree Cone End EO 24 Degree DKO Swivel

Parker EL Swivel run tee FOR A713553 (Heavy Series S)

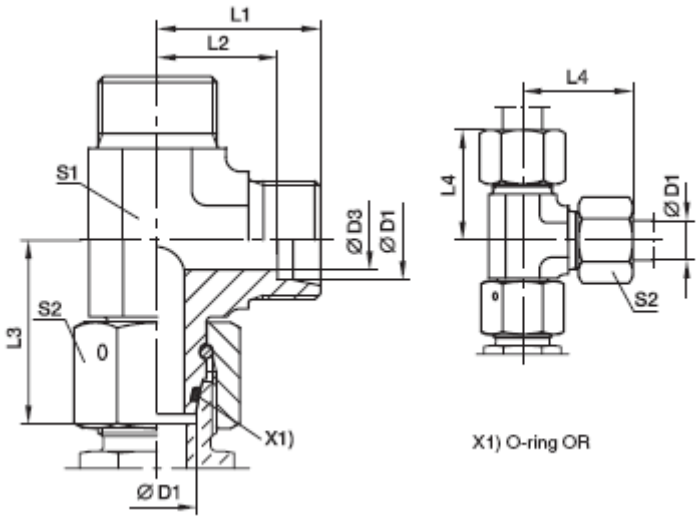

Part Number	Threads	D1	D3	L1	L2	L3	L4	S1	S2	Mat/Fin
47652914	M16X1.5	08	5	24	17	27.5	32	14	19	STL ZND
1307813	M18X1.5	10	6	25	17.5	30.0	34	17	22	STL ZND
85807676	M20X1.5	12	8	29	21.5	31.0	38	17	24	STL ZND
85814697	M24X1.5	16	12	33	24.5	36.5	43	24	30	STL ZND
92728082	M30X2	20	16	37	26.5	46	48	27	36	STL ZND

24 Degree Cone End EO 24 Degree DKO Swivel (Hvy Series S)

DIN 3861
ISO 8434-1

Parker ET Swivel Nut Branch Tee

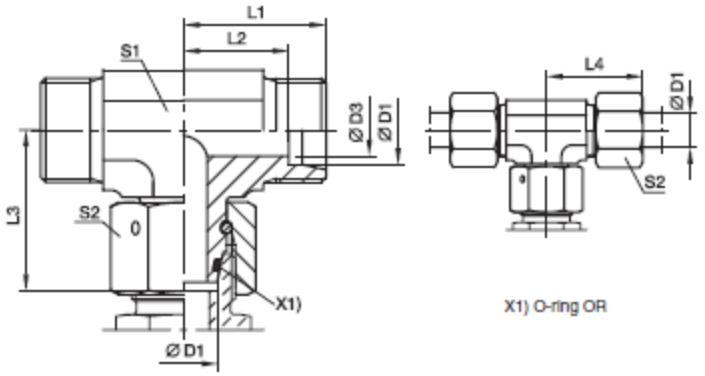

Part Number	Threads	D1	D3	L1	L2	L3	L4	S1	S2	Mat/Fin
85807616	M16X1.5	8	5	24	17.0	27.5	32	14	19	STL/ZND
85811853	M20X1.5	12	8	29	21.5	33	38	17	24	STL/ZND
85812608	M24X1.5	16	12	33	24.5	36.5	43	24	30	STL/ZND
84515559	M30X2.0	20	16	37	26.5	44.5	48	27	36	STL/ZND

Parker ET Swivel Nut Branch Tee
(Light Series L)
24 Degree / 24 Degree Swivel
DIN 3861
ISO 8434-1

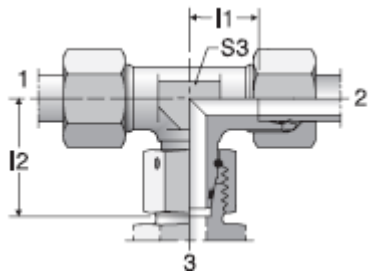

Part Number	1, 2 & 3(mm)	3 Metric	L1	L2	S3	Series	MAT	FIN
47422572	8	M14X1.5	14	27.5	12	L	STL	ZND
47498133	10	M16X1.5	15	29	14	L	STL	ZND
84090114	15	M22X1.5	21	32.5	19	L	STL	ZND
48033410	18	M26X1.5	23.5	35.5	24	L	STL	ZND
51457236	22	M30X2.0	27.5	38.5	27	L	STL	ZND

24D bite Type Parker S6BU

Swivel Nut
Branch Tee
Flareless/
Flareless
Swivel

SAE J514
080433

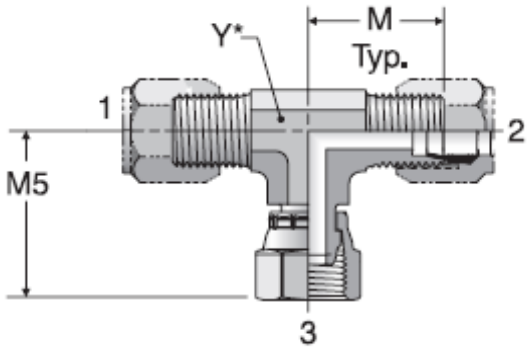

Part Number	Description	1	2	3	M	M5	Y	Mat/Fin
87022794	Tee, Branch Swvl 3/8 tube Parker 6S6BU	9/16	9/16	9/16	1.05	1.25	9/16	STL/ZND

24D Adjustable Run Tee

24D Cone end / Stand Pipe Adjustable

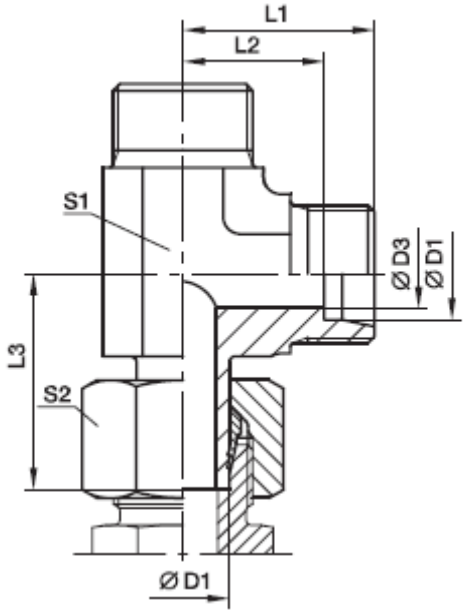

Part Number	Description	D1	D3	L1	L2	L3	S1	S2	Mat/Fin
51400075	TEE, RUN ADJUSTABLE	08	6	21	14	27	12	17	STL/ZND

24 Degree Union Tee (ISO 8434-1)

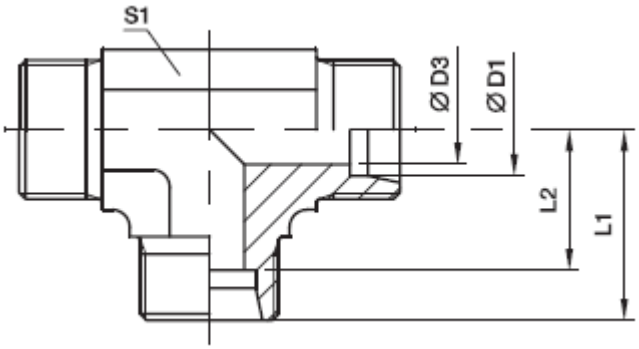

Part Number	Threads	Series	D1	D3	L1	L2	S1	Mat'l	Finish
51400203	M14x1.5	L	08	6	21	14	12	STL	ZND
984987	M26X1.5	L	18	15	31	23.5	24	STL	ZND
85807661	M16x1.5	S	08	5	24	17	14	STL	ZND
85814129	M20x1.5	S	12	8	29	21.5	17	STL	ZND

Male UNF/UN Thread O-ring
(ISO 11926) SAE J1926 /
EO 24 Degree Cone End (ISO 8434-1)
Parker GE-UNF/UN

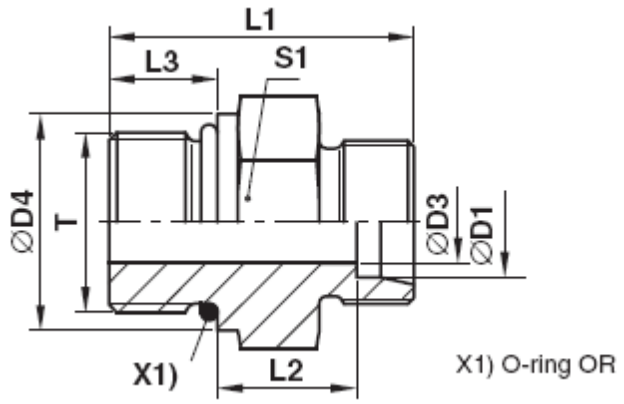

Part Number	Series	D1		D3	T	D4	L1	L2	L3	L4	S1	S2	Mat/Fin
913528	L	08	M14X1.5	5	7/16-20	-	26	10	9	25	17	17	STL ZND
84151579	L	10	M16X1.5	5	7/16-20		27	11	9	26	17	19	STL ZND
84151580	L	12	M18X1.5	10	3/4-16		31	13	11	28	24	22	STL ZND
47509954	L	22	M30X2		3/4-16		40	19	13		32		STL ZND
48149871	L	35	M45X2	23	1 5/16-12	39.6	43	17.5	15	39	46	50	STL ZND
51606655	S	16	M24X1.5	12	7/8-14	-	40	15.5	16	37	27	30	STL ZND

EO 24 Degree Cone End / Male NPT thread (SAE J476)

Parker GE-NPT

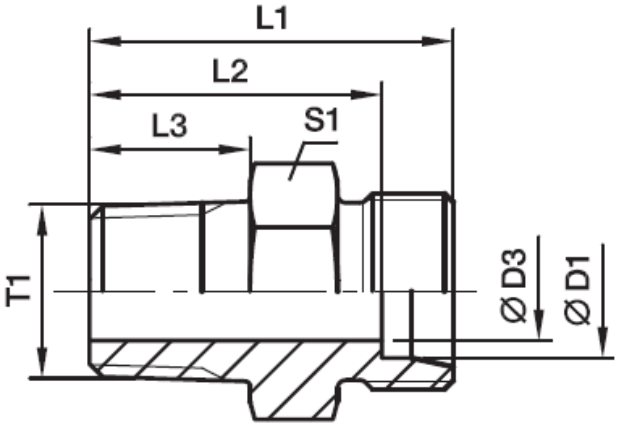

Part Number	Series	D1	T1	D3	L1	L2	L3	L4	S1	Mat'l	Finish
48030372	L	08	1/8-27 NPT	4.0	25.0	18.0	10.0	33	14	STL	ZND

Male Metric Thread – O-Ring (ISO 6149) / 24 Degree Cone End (ISO 8434-1)

Parker GEO

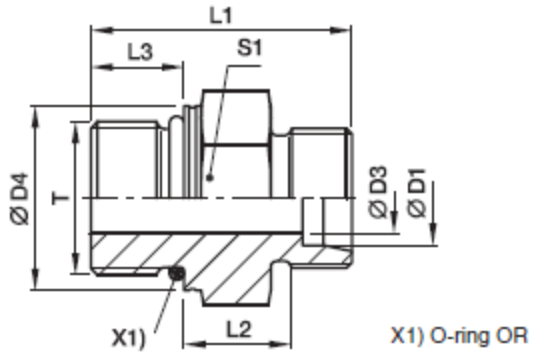

Part Number	Series	D1	T	D3	D4	L1	L2	L3	S1	MAT/FIN
2928646	L	08	M12X1.5	6	17	28	10	11	17	STL/ZND
85826494	L	08	M18X1.5	6	24	31.5	12	12.5	24	STL/ZND
2928820	S	08	M14X1.5	6	19	33	15	11	19	STL/ZND
92725510	L	12	M16X1.5	9	22	31	12.5	11.5	22	STL/ZND
51530735	L	12	M27X2	10	32	38.5	15.5	16	32	STL/ZND
85806493	S	12	M16X1.5	9	22	35	15	12.5	22	STL/ZND
2929641	S	12	M18X1.5	9	24	38.5	17	14	24	STL/ZND
2928383	L	15	M18X1.5	11	24	33	13.5	12.5	24	STL/ZND
2928616	L	15	M22X1.5	11	27	33	13.5	12.5	27	STL/ZND
85812517	S	16	M18X1.5	12	24	42	18.5	15	27	STL/ZND
48033417	L	18	M22X1.5	14	27	35	14.5	13	27	STL/ZND
84490431	L	22	M27X2	18	32	40	16.5	16	32	STL/ZND
47636680	L	35	M42X2	30	50	44	17.5	16	50	STL/ZND
48094421	L	35	M48X2	30	55	47	18.5	17	55	STL/ZND

Male Metric Thread – metal sealing edge (ISO 9974) / EO 24 Degree Cone End

Parker GE-M

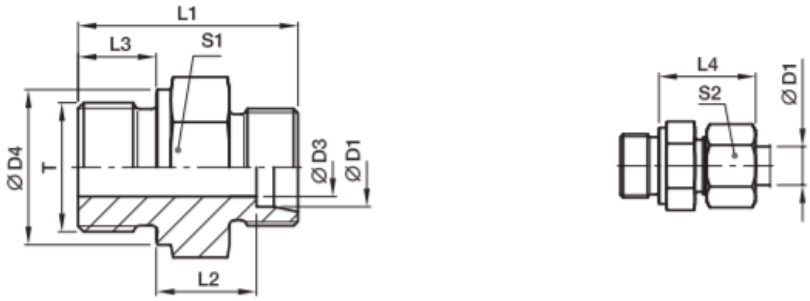

Part Number	Series	D1	T	D3	D4	L1	L2	L3	L4	S1	S2	MAT/FIN
2465074	L	18	M18X1.5	11	23	34	14	12	30	27	32	STL/ZND

Male Metric Thread - ED (ISO 9974-2) / EO 24 Degree Cone End

Parker GE-M-ED

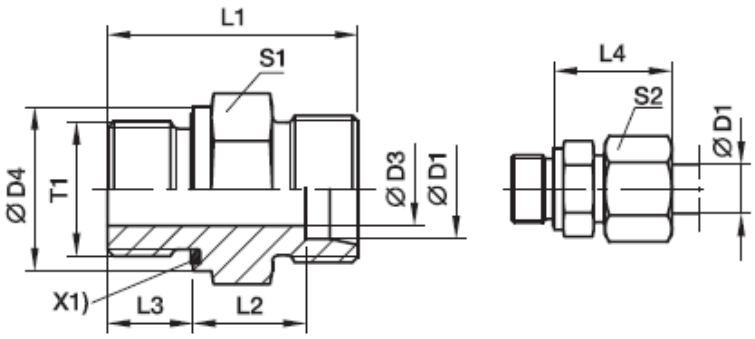

X1) Eolastic-sealing ED

Part Number	Series	D1	T1	D3	D4	L1	L2	L3	L4	S1	S2	MAT/FIN
47770133	L	06	M10X1.0	4	14	23.5	8.5	8	23	14	14	STL/ZND
2928386	L	10	M10X1	4	13.9	25.5	11.5	8		17		STL/ZND
2929089	L	10	M12X1.5	6	17	30.0	11.0	12	26	17	19	STL/ZND
1665742	L	10	M14X1.5	7	19	30	11	12	26	19	19	STL/ZND
2268448	L	10	M16X1.5	8	22	31.5	12.5	12	24	22	19	STL/ZND
2268460	L	10	M18X1.5	8	24	31.5	12.5	12	27	24	19	STL/ZND
91809250	L	10	M22X1.5	8	27	35	13	14	29	27	19	STL/ZND
1768189	L	12	M16X1.5	9	22	31.5	12.5	12	27	22	22	STL/ZND
2268429	L	12	M18X1.5	10	24	31.5	12.5	12	27	24	22	STL/ZND
1768191	L	15	M18X1.5	11	24	32.5	13.5	12	29	24	27	STL/ZND
2906244	L	15	M22X1.5	12	27	36	15.0	14	30	27	27	STL/ZND
1636655	L	18	M22X1.5	14	27	36	14.5	14	31	27	32	STL/ZND
7730579	L	18	M26X1.5	15	31.9	38	14.5	16		32		STL/ZND
99080	L	22	M26X1.5	18	32	40	16.5	16	33	32	36	STL/ZND
1331029	L	28	M33X2	23	40	43	17.5	18	34	41	41	STL/ZND
8411041	L	35	M42X2.0	30	50	48	17.5	20	39	50	50	STL/ZND
2479077	S	16	M18X1.5	10	24	38.5	18.0	12	36	27	30	STL/ZND
85806394	S	16	M22X1.5	12	27	41	18.5	14	37	27	30	STL/ZND
85806643	S	16	M27X2.0	12	32	43	19.5	16	39	32	36	STL/ZND

24D Connectors
ISO 8434-1
Union Male DIN L Series.
Metric end with metallic seal for ISO 9974 port

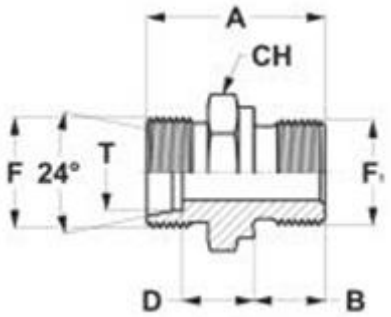

Part Number	T(mm)	F	F1	A	B	D	CH	Material	Finish
47771066	15	M22X1.5	M22X1.5	36	14	15	27	STL	ZND

24D Connectors DIN 3861
ISO 8434-1
Union Male DIN L Series

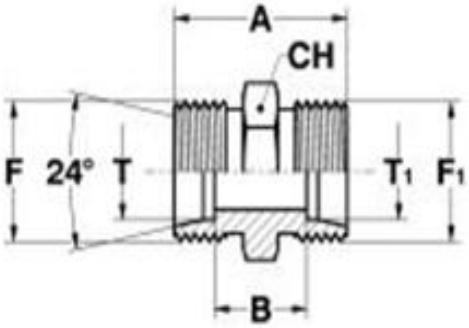

Part Number	T(mm)	T1 (mm)	F	F1	A	B	CH	Material	Finish
47499003	10	10	M16X1.5	M16X1.5	27	13	17	STL	ZND
47856259	12	06	M18X1.5	M12X1.5	27	13	19	STL	ZND
9513809	12	08	M18X1.5	M14X1.5	27	13	19	STL	ZND
84490428	35	35	M45X2.0	M45X2.0	41	20	46	STL	ZND

Flareless DKO Swivel Union 24 Degree — Parker GZ 4100 Catalog

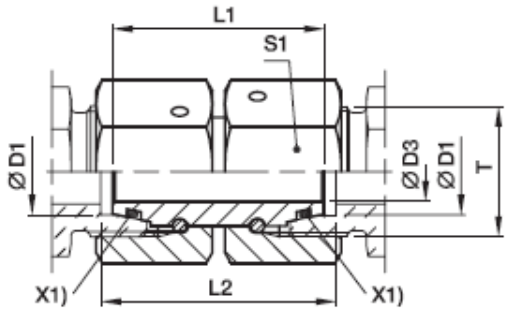

Part Number	Description	Series	D1	T	D3	L1	L2	S1	MAT/FIN
2781646	Union, M14X1.4 Swivel	L	08	M14X1.5	4	32	33	17	STL/ZND
84515054	Union, M16X1.5 Swivel	L	10	M16X1.5	6	33	34	19	STL/ZND
84515055	Union, M30X2 Swivel	L	22	M30X2	17	42	44	36	STL/ZND
47862991	Union, M36X2 Swivel	L	28	M36X2	22	46	48	41	STL/ZND
48154997	Union, M45X2 Swivel	L	35	M45X2	28	48	52	50	STL/ZND
2365617	Union, M24X1.5 Swivel	S	16	M24X1.5	11	39	42	30	STL/ZND

DKO Swivel Reducer 24 Degree Cone End DIN — Parker GZR35/22L 4100-6/DE German

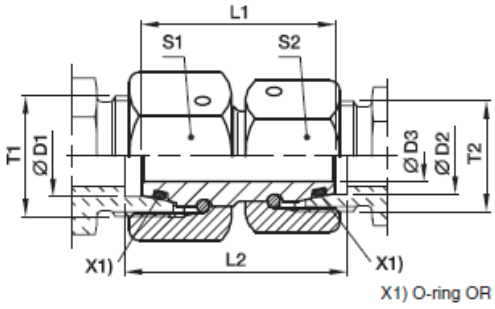

Part Number	Description	T1	T2	D3	L1	L2	S1	S2	MAT/FIN
84490426	Reducer swvl M45/M30	M45x2	M30x2	17	48	51	50	36	STL/ZND

24º Reducing swivel straight union

to be relocated in STPL620

Parker RED

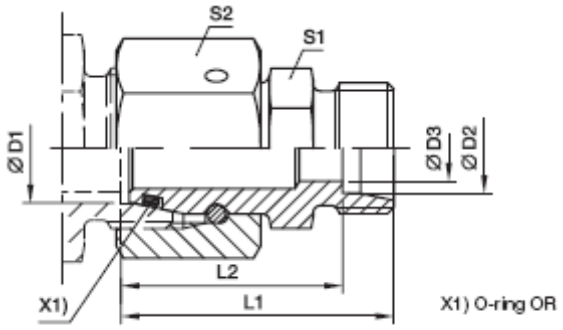

Part Number	Series	D1	D2	D3	L1	L2	L3	S1	S2	Mat'l	Finish
84278114	L	12	08	6	32	25	40	17	22	STL	ZND
47781360	L	15	08	6	35.5	28.5	43	19	27	STL	ZND
7723934	L	15	10	8	36.5	29.5	44	19	27	STL	ZND
51613355	L	15	12	10	36.5	29.5	44	19	27	STL	ZND
48127315	L	18	12	10	36	29	44	24	32	STL	ZND
7723942	L	18	15	12	37	30	45	24	32	STL	ZND
51457238	L	22	12	10	40	33	48	27	36	STL	ZND
84515560	L	28	10	8	42	35	50	32	41	STL	ZND
9512230	L	28	15	12	43	36	51	32	41	STL	ZND
51542589	L	28	18	15	43	35.5	52	32	41	STL	ZND
51569755	L	28	22	15	43	37.5	54	32	41	STL	ZND
51487169	L	35	18	15	46	38.5	55	41	50	STL	ZND
51595119	L	35	28	24	48	40.5	57	41	50	STL	ZND
84515561	S / L	20	18	14	43	35.5	51	27	36	STL	ZND

24º Adapter swivel

to be relocated in STPL620

Parker DA18LOMD

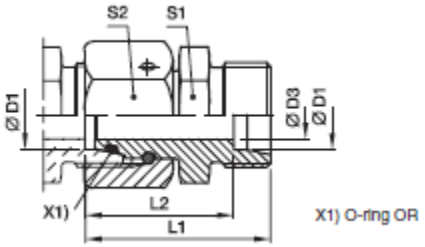

Part Number	Description	L1	L2	L3	D1		D3	S1	S2
84515562	Adapter, 24D SWVL 18	43.5	36	52	18		13	27	32
48155000	Adapter, 24D SWVL 35	60.5	50	72	35		28	46	50

24 Degree Connector
Female Swivel DIN L Series – male metric with elastomer seal ISO 9974 ports

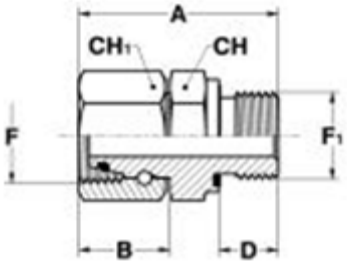

Part Number	T	F	F_1	A	B	D	CH	CH_1	Mat'l	Finish
47553373	8	M14X1.5	M12X1.5	38	17.5	12	17	17	STL	ZND

24 Degree Connector (DIN 3861)
Union Female Swivel DIN L Series – male DIN L Series

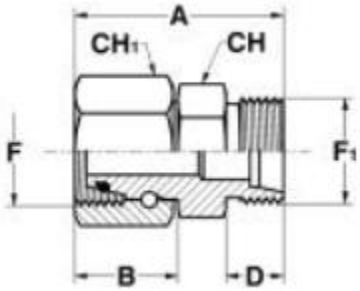

Part Number	T	F	T_1	F_1	A	B	D	CH	CH_1	Mat'l	Finish
51407567	15	M22X1.5	15	M22X1.5	43.5	21.5	12	24	27	STL	ZND

Male Metric Thread – O-Ringl
(ISO 6149) / EO 24D DKO Swvl
Parker EGEO

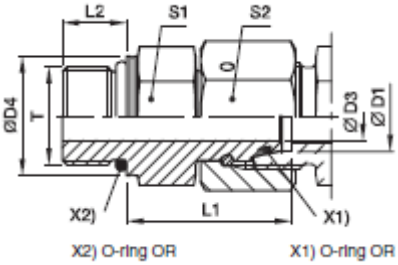

Part Number	**Series**	**D1**	**T**	**D3**	**D4**	**L1**	**L2**	**S1**	**S2**
51507028	L	12	M16X1.5	8.0	21.8	30.5	11.5	22	22
51412447	L	28	M33X2.0	22.0	40.8	35.0	16.0	41	41
47652912	S	08	M14X1.5	4.0	18.8	29.5	11.0	19	19

Male Metric Thread - ED seal
(ISO 9974-2) / EO 24D DKO Swvl
Parker EGE-M-ED

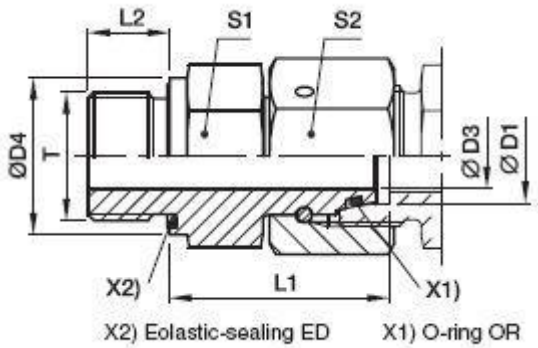

Part Number	Series	D1	T	D3	D4	L1	L2	S1	S2	Mat'l	Finish
1307802	S	08	M14x1.5	4.0	19	29.5	12	19	19	STL	ZND
1338330	L	10	M14x1.5	6.0	19	27.5	12	19	19	STL	ZND
2929201	L	15	M22x1.5	10.0	27	32.0	14	27	27	STL	ZND

Male BSPP Thread - ED seal
(ISO 1179) / EO 24D DKO Swvl
Parker EGE-R-ED

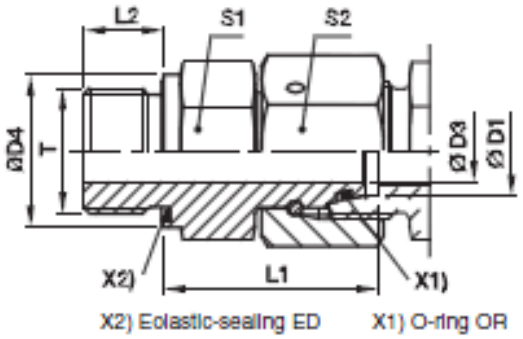

Part Number	Series	D1	T	D3	D4	L1	L2	S1	S2	Mat'l	Finish
47883732	L	15	G1/2A	10.0	27	32.0	14	27	27	STL	ZND
7730348	L	18	G1/2A	13.0	27	31.5	14	27	32	STL	ZND
48033446	L	18	G3/4A	13.0	32	29.5	16	32	32	STL	ZND
92683675	S	16	G1/2A	11.0	27	37	14	27	30	STL	ZND

Male BSPP 60D Cone end (ISO 8434-6) / Female BSPP Thread (ISO 1179-1)
Parker G4MK4

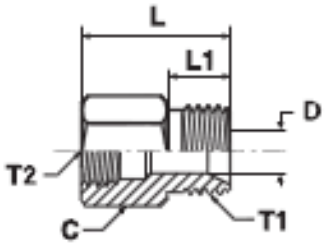

Part Number	T1 BSPP	T2 BSPP	C mm	D mm	L mm	L1 mm	Mat'l	Finish
47883733	3/8	1/4	22	8	36	12	STL	ZND
51604941	3/8	3/8	22	8	35	12	STL	ZND
51584835	1/2	1/2	27	12.5	43.5	14	STL	ZND
51619751	3/4	3/8	32	17	42	16	STL	ZND
47883737	3/4	1/2	32	17	48	16	STL	ZND

Female Metric Thread - (ISO9974-1) / EO 24D Cone
Parker GAI-M

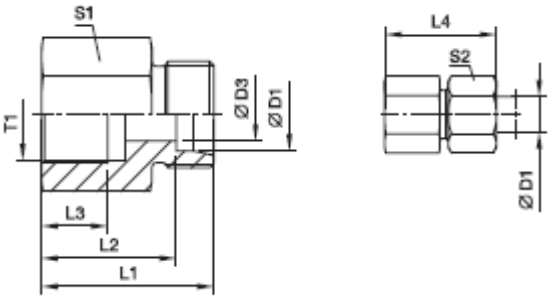

Part Number	Series	D1	T	D3	L1	L2	L3	L4	S1	S2	Mat'l	Finish
47771471	L	06	M10X1.0	4.0	26.5	19.5	8.0	34	14	14	STL	ZND
47638046	L	10	M14X1.5	8.0	32.0	25.0	12.0	40.0	19	19	STL	ZND
47652915	S	08	M14X1.5	5.0	33.0	26.0	12.0	41.0	17	19	STL	ZND

WEE-R ADJ LOCKNUT ELBOW
EO 24 DEGREE
CONE END / ADJ
BSPP O –Ring + Retaining Ring
(ISO 1179)

Parker
WEE-R

FOR
A707037
A707532

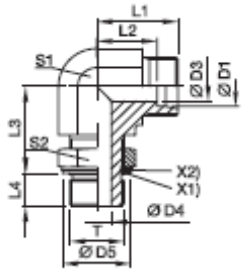

Part Number	Series	D1	T	D3	D4	D5	L1	L2	L3	L4	S1	S2	Mat / Fin
47466895	L	12	G 3/8 A	10.0	10.0	23	26	19	28	9.0	19	22	STL/ ZND
48033459	L	15	G1/2 A	12.0	12.5	28	28	21	30	13.0	22	27	STL/ ZND
92650729	S	16	G 3/4 A	12	15.5	33	33	24.5	39	12	30	36	STL/ZND
85814135	S	20	G 3/4 A	16.0	15.5	33	38	28	39	12.0	30	36	STL/ ZND
2929266	L	35	G 1 1/4 A	30	27.5	51	45	34.5	44	15	41	50	STL/ZND

WEE-M ADJ LOCKNUT ELBOW
EO 24 DEGREE
CONE END (ISO 8434-1) / ADJ
Metric O –Ring + Retaining Ring
(ISO 9974-1)

Parker
WEE-M

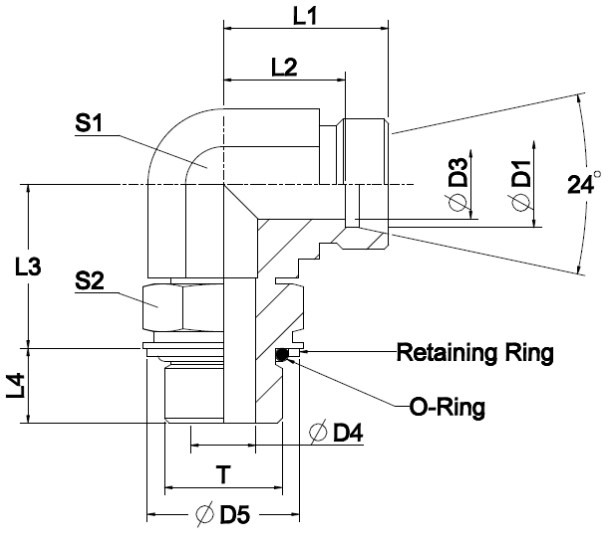

Part Number	Series	D1	T	D3	D4	D5	L1	L2	L3	L4	S1	S2	Mat / Fin
85825626	S	16	M22x1.5	12	12	28	33	25	36	14	27	27	STL / ZND
92645786	S	20	M27X2	16	15	33	38	28	39	16	30	32	STL / ZND

WEE-UNF ADJ LOCKNUT ELBOW EO 24 DEGREE
CONE END
ADJ THREAD /SAE-ORD

Parker WEE-UNF

Series L

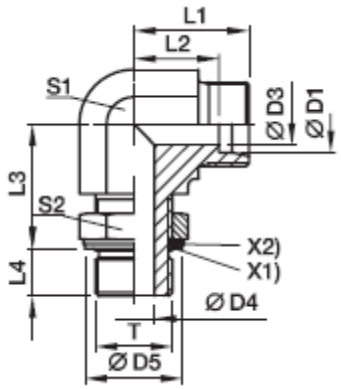

Part Number	D1	T	D3	D4	D5	L1	L2	L3	L4	S1	S2	Mat/Fin
51551020	12	3/4-16 UNF	10	10	25.7	26	19	25	13	22	22	STL ZND
84151582	15	3/4-16 UNF	12	10	25.7	28	21	28	13	22	22	STL ZND
51551021	15	7/8-24 UNF	12	12.5	29.3	28	21	28	15	22	27	STL ZND
51551022	18	1-1/16-12 UN	15	15.5	29.3	31	24	32	17	30	32	STL ZND
51551023	22	1-1/16-12 UN	19	15.5	36.7	35	28	35	17	30	32	STL ZND

WEE-OR ADJ LOCKNUT ELBOW EO 24 DEGREE CONE END ADJ THREAD ISO 6149

Parker WEE-OR

4100-6/DE German

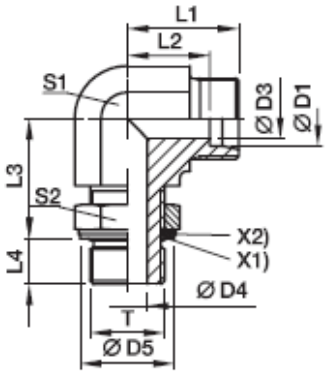

Part Number	Description	D1	T	D3	D4	D5	L1	L2	L3	L4	S1	S2	Mat/Fin
51573925	ELBOW, 90, M 24D CONE X M14X1.5 ORB LIGHT	10	M14X1.5	8	7.5	19	24	17	24	11	19	19	STL ZND
51534825	ELBOW, 90, M 24D CONE X M16X1.5 ORB LIGHT	12	M16X1.5	10	9	23	26	19	24.5	11.5	19	22	STL ZND
92786713	ELBOW, 90, M 24D CONE X M22X1.5 ORB LIGHT	12	M22X1.5	10	14	27.5	28	21	27.2	12.8	22	27	STL ZND
51507030	ELBOW, 90, M 24D CONE X M18X1.5 ORB LIGHT WEE15LMOROMD	15	M18X1.5	12	11	25	28	21	30	11	22	24	STL ZND
51621990	ELBOW, 90, M 24D CONE X M18X1.5 ORB HEAVY	16	M18X1.5	12	11	25	33	25	36	12.5	27	24	STL ZND
84490427	ELBOW, 90, M 24D CONE X M27X2 ORB HEAVY WEE20SMOROMD	20	M27X2	16	15	33	38	28	39	16	32	36	STL ZND
84534147	ELBOW, 90, M 24D CONE X M27X2 ORB LIGHT WEE22LM27X2OROMD	22	M27X2	19	18	33	35	28	35	14	30	32	STL ZND

EO 24 DEGREE CONE END
EO 24 DEGREE DKO SWIVEL

Parker EW SWIVEL NUT ELBOW

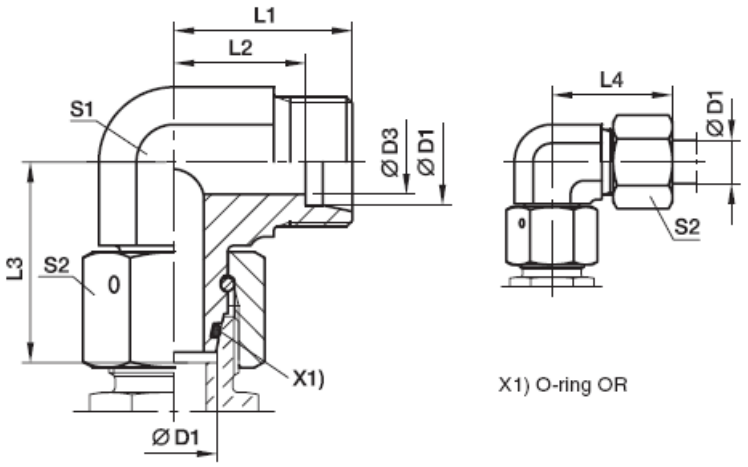

Part Number	Series	D1	D3	L1	L2	L3	L4	S1	S2	Material	Finish
47775938	L	6	4	19	12	26.0	27	12	14	STL	ZND
1636004	L	8	6	21	14	27.5	29	12	17	STL	ZND
1627771	S	8	5	24	17	27.5	32	14	19	STL	ZND
1983888	L	10	8	22	15	29	30	14	19	STL	ZND
1350300	S	10	6	25	17.5	30.0	34	17	22	STL	ZND
1636005	L	12	10	24	17	29.5	32	17	22	STL	ZND
85807732	S	12	8	29	21.5	31.0	38	17	27	STL	ZND
8474887	L	15	12	28	21	32.5	36	19	27	STL	ZND
1307809	S	16	12	33	24.5	36.5	43	24	30	STL	ZND
1636006	L	18	15	31	23.5	35.5	40	24	32	STL	ZND
85826815	S	20	16	37	26.5	44.5	48	27	36	STL	ZND
1636007	L	22	19	35	27.5	38.5	44	27	36	STL	ZND
1636008	L	28	24	38	30.5	41.5	47	36	41	STL	ZND
1360742	L	35	30	45	34.5	51	56	41	50	STL	ZND

24 Degree Union elbow 45° Male (DIN 3861 / ISO 8434-1) – DKO Swivel Female

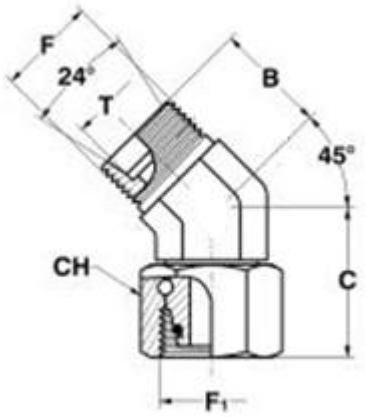

Part Number	Series	T	F	F1	B	C	CH	Mat'l	Finish
4554130	L	15	M22X1.5	M22X1.5	24	32	27	STL	ZND
92691122	S	16	M24X1.5	M24X1.5	24	36.5	30	STL	ZND
92728085	S	20	M30X2	M30X2	26	45.5	36	STL	ZND

TR-Tee Reducer 24 DEGREE CONE END Parker TR28/18/28L TR28/22/28L

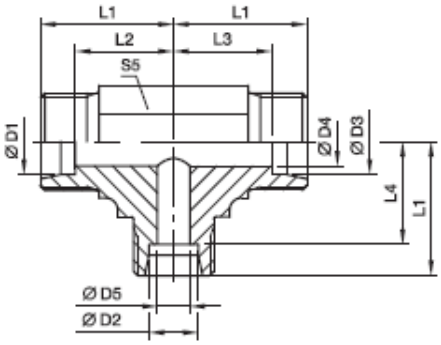

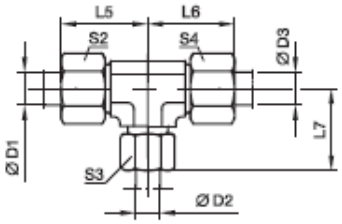

Part Number	D1	D2	D3	D4	D5	L1	L2	L3	L4	L5	L6	L7	S2	S3	S4	S5
47967733	12	06	12	10	4	24	17	17	17	32	32	32	22	14	22	17
962710	12	18	12	10	15	31	24	24	23.5	39	39	40	22	32	22	24
84515556	28	18	28	24	15	38	30.5	30.5	30.5	47	47	47	41	32	41	36
84515557	28	22	28	24	19	38	30.5	30.5	30.5	47	47	47	41	36	41	36

Connector 24D Cone
male DIN L series –
male BSPP
ISO 1179
Port
ED-Seal
Parker GE-R-ED
Male Stud Conn
Steel, ZND

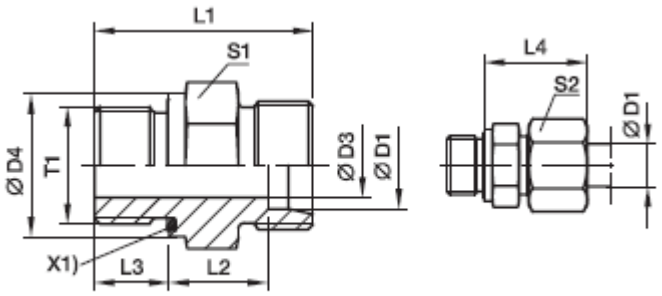

X1) Eolastic-sealing ED

Part Number	Description	D1	T1	D3	D4	L1	L2	L3	L4	S1	S2
1665749	Conn M14X1.5 X G1/4A	8	G1/4A	6	19	29	10	12	25	19	17
51400913	Conn 8mm G3/8A	8	G3/8A	6	22	30.5	11.5	12	26	22	17
92318867	Conn M14X1.5 X G1/2A	8	G1/2A	6	27	33	12	14	27	27	17
1637183	Conn M16X1.5 X G1/4A	10	G1/4A	6	19	30	11	12	26	19	19
2928203	Conn M16X1.5 X G3/8A	10	G3/8A	8	22	31.5	12.5	12	27	22	19
47919627	Conn M16X1.5 X G1/2A	10	G1/2A	8	27	34.0	13.0	14	28	27	19
2247096	Conn M18X1.5 X G1/4A	12	G1/4A	6	19	31	12	12	27	19	22
92140322	Conn M18X1.5 X G3/8A	12	G3/8A	9	22	31.5	12.5	12	27	22	22
51400998	Conn 12mm G3/8A	12	G3/8A	9	22	31.5	12.5	12	27	22	19
51401002	Conn 12mm G1/2A	12	G1/2A	10	27	34	13	14	28	27	22
51400939	Conn 15mm G1/2A	15	G1/2A	11	27	35	14	14	29	27	27
8411057	Conn M26X1.5 X G1/2A	18	G1/2A	14	27	36	14.5	14	31	27	32
48033480	Conn M26X1.5 X G3/4A	18	G3/4A	15	32	38	14.5	16	31	32	32
51547206	Conn M30X2X G1A	22	G1A	19	40	43	17.5	18	34	41	36
51531410	Conn M36X2 X G1A	28	G1A	23	40	43	17.5	18	34	41	41

Connector 24D Cone
male DIN S series –
male BSPP
ISO 1179
Port
ED Seal

Parker GE-R-ED
Male Stud Conn
Steel, ZND

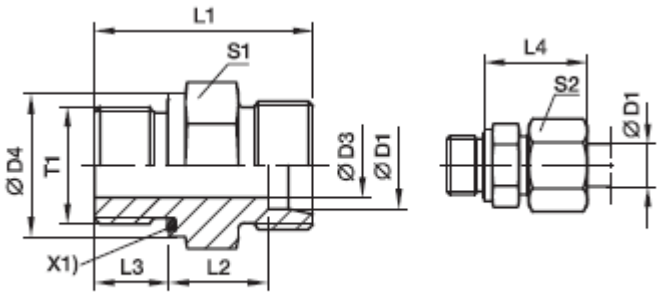

X1) Eolastic-sealing ED

Part Number	Description	D1	T1	D3	D4	L1	L2	L3	L4	S1	S2
1665750	Conn M16X1.5 X G1/4A	08	G1/4A	5	19	34	15	12	30	19	19
47699798	Conn M20X1.5 X G1/4A	12	G1/4A	5	19	35.5	16.5	12	33	22	24
85807705	Conn M20X1.5 X G1/2A	12	G1/2A	8	27	39	17.5	14	34	27	24
85807698	Conn M24X1.5 X G1/2A	16	G1/2A	12	27	41	18.5	14	37	27	30
85814532	Conn M24X1.5 X G3/8A	16	G3/8A	8	22	38.5	18.0	12	36	27	30
85826490	Conn M24X1.5 X G3/4A	16	G3/4A	12	32	45	20.5	16	39	32	30

Connector 24D Cone
ISO 8434-1 (DIN 3861)
male DIN L series –
male BSPP with metallic seal for ISO
1179 port

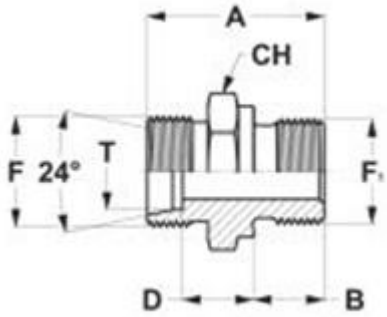

Part Number	T mm	F	F1 (BSPP)	A	B	D	CH	Material	Finish
47441838	15	M22X1.5	1/2-14	35	14	14	27	STL	ZND
1939833	18	M26X1.5	3/8-19	33.5	12	14	27	STL	ZND

Connector 24D Cone
male DIN series –
male BSPP
ISO 1179 (DIN 3852) / Standpipe
adjustable

Parker EVGE-R-ED
Male Stud Conn
Steel, ZND

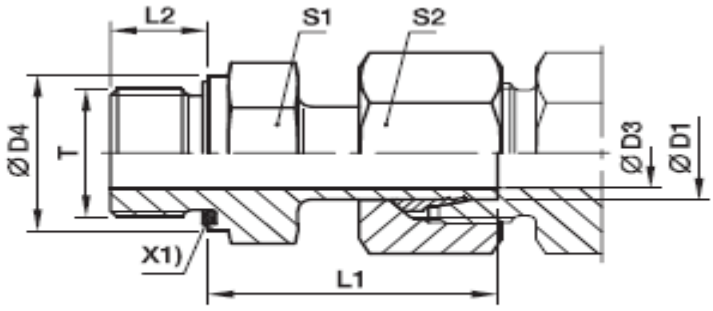

X1) Eolastic-sealing ED

Part Number	Series	D1	T	D3	D4	L1	L2	S1	S2	Material	Finish
51400083	L	08	G1/4A	4.5	19	29.5	12	19	17	STL	ZND
47441836	L	15	G1/2A	11.0	27	31.0	14	27	27	STL	ZND
92691124	S	16	G3/4A	11.5	32	39.0	16	32	30	STL	ZND

Connector 24D Cone
ISO 8434-1 (DIN 3861)
Elbow 90
male DIN S series –
male BSPP (ADJ) with O-Ring and
Retaining Ring ISO 1179

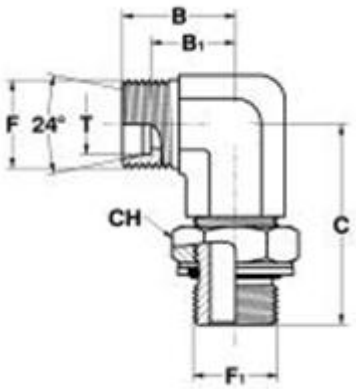

Part Number	T mm	F	F1	B	B1	C	CH	Material	Finish
47498129	6	M14X1.5	G1/4-19 A	23	16	37	19	STL	ZND

24D Cone DIN 3861 (ISO 8434-1)
Tee, Branch – ADJ Male DIN S Series – male BSPP with O.R. and retaining ring ISO 1179 ports

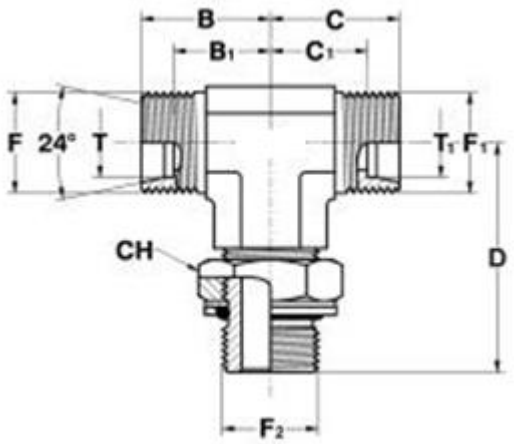

Part Number	F	F1	F2 BSPP	B	B1	C	C1	CH	D	Material / Finish
47498137	M14X1.5	M14X1.5	G1/4-19A	23	16	23	16	19	37	STL/ZND

24D Cone DIN 3861 (ISO 8434-1)
Tee, Branch – ADJ Male DIN L Series – male ISO 6149 with O-Ring

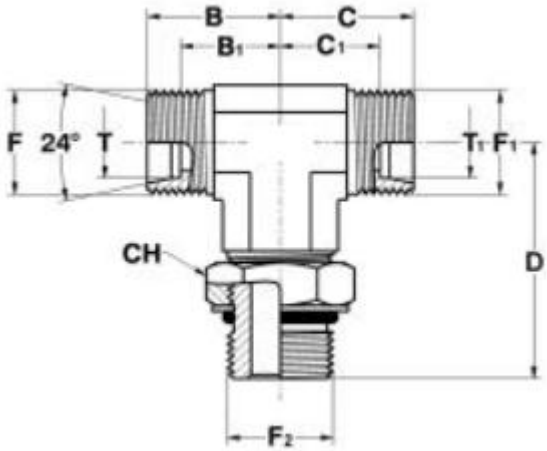

Part Number	F	F1	F2	B	B1	C	C1	CH	D	Material / Finish
51573955	M22X1.5	M22X1.5	M18X1.5	28	21	28	21	24	41	STL/ZND
51573957	M26X1.5	M26X1.5	M22X1.5	31	24	31	24	27	45	STL/ZND

ORFS / Adjustable BSPP O-Ring + Retaining Ring (ISO 1179) Run Tee

ORFS /BSPP-ORR /ORFS

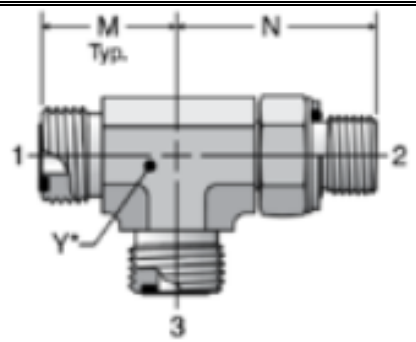

Part Number	1 ORFS	2 (BSPP)	3 ORFS	M (mm)	N (mm)	Y (mm)	Material	Finish
90445588	11/16-16	3/8-19	11/16-16	27	38	19	STL	ZND

24D Cone DIN 3861 (ISO 8434-1)
Union Cross male DIN L Series

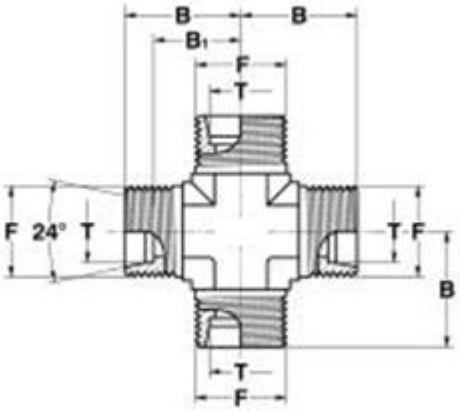

Part Number	F	B	B1	Material	Finish
47553403	M14X1.5	21	14	STL	ZND
51507015	M18X1.5	24	17	STL	ZND
1709689	M22X1.5	28	21	STL	ZND

24D DIN 3861 (ISO 8434-1)
Female Plug DIN L Series

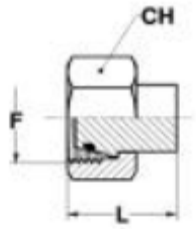

Part Number	T	F	L	CH	Material	Finish
48163718	08	M14X1.5	24	17	STL	ZND
51698618	10	M16X1.5	25	19	STL	ZND
2268318	22	M30X2	26	36	STL	ZND

Bushing, Adapter — Parker – Number not available at time of printing

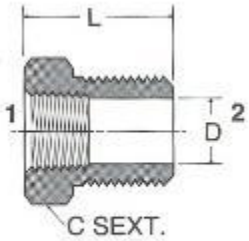

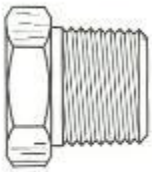

Part Number	Description	1	2	C	L	Mat
84163826	Bushing, Adptr 1/2 NPTF F X M18x1.5 Str Thrd M	1/2 NPTF	M18x1.5	27	30	STL

Alfagomma Str Connector BSP 60D 1/2-14 X BSPP Male W/O-ring and Seal — R1A05M106Q

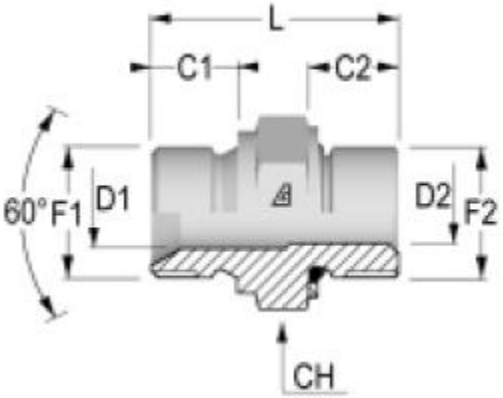

Part Number	Description	OD-MM	OD-IN.	F1	F2	L	C1	C2	CH
84168352	Conn 60D BSP Male X BSPP Male w/ring and seal	12	1/2	1/2-14	1/2-14	40	17	14.5	27

60D Cone (ISO 8434-6)
Elbow, 90 Male BSPP – Male BSPP (ADJ) with O.R. and Retaining Ring ISO 1179 ports

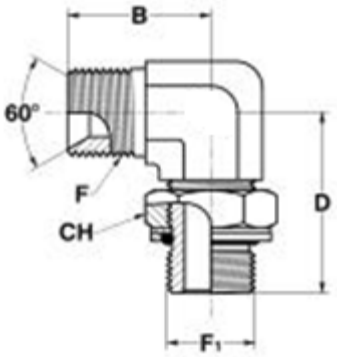

Part Number	F BSPP	F1 BSPP	B	D	CH	Material	Finish
47490251	1/4-19	1/4-19	27	32	19	STL	ZND
47530738	3/8-19	3/8-19	29	37	24	STL	ZND
47530736	1/2-14	1/2-14	34	43	27	STL	ZND

60D Cone (ISO 8434-6)
Elbow, 90 Male BSPP – Swivel Nut BSPP

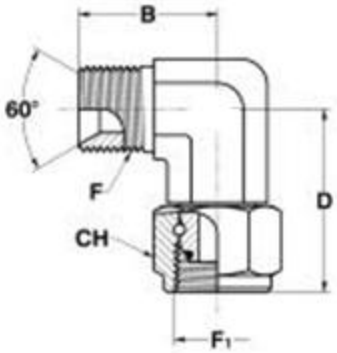

Part Number	F BSPP	F1 BSPP	B	D	CH	Material	Finish
47497798	1/4-19	1/4-19	27	28	19	STL	ZND
47500625	3/8-19	3/8-19	29	37	22	STL	ZND
47497821	1/2-14	1/2-14	34	44.5	27	STL	ZND
47490257	3/4-14	3/4-14	41	55.5	32	STL	ZND

60D Cone (ISO 8434-6)
Elbow, 45 Male BSPP – Swivel Nut BSPP

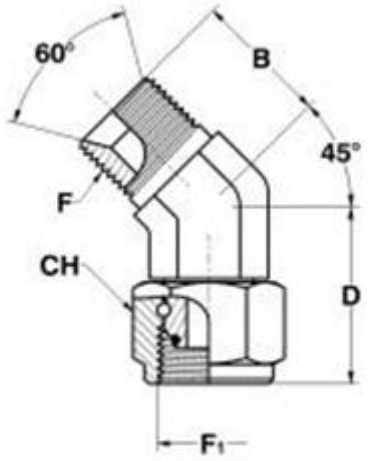

Part Number	F BSPP	F1 BSPP	B	D	CH	Material	Finish
47547176	1/4-19	1/4-19	21	30	19	STL	ZND
47547185	3/8-19	3/8-19	25	33	22	STL	ZND

60D Cone (ISO 8434-6)
Union Tee – male BSPP

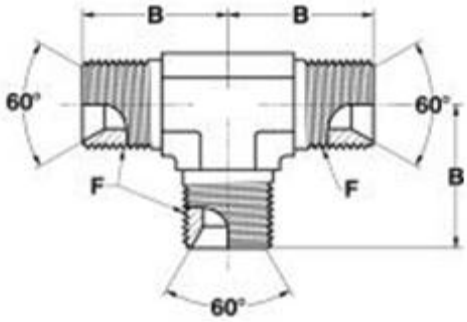

Part Number	F BSPP	B	Material	Finish
47499064	1/4-19	27	STL	ZND

60D Cone (ISO 8434-6)
Tee, Run (ADJ) male BSP – male BSPP with O.R. and retaining ring ISO 1179 ports.

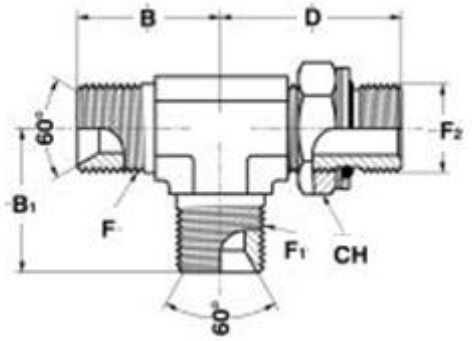

Part Number	F BSPP	F1 BSPP	F2 BSPP	B	B1	D	CH	Material	Finish
47561912	1/2-14	1/2-14	1/2-14	34	34	43	27	STL	ZND

60D Cone (ISO 8434-6)
Tee, Run – Swivel Nut BSPP

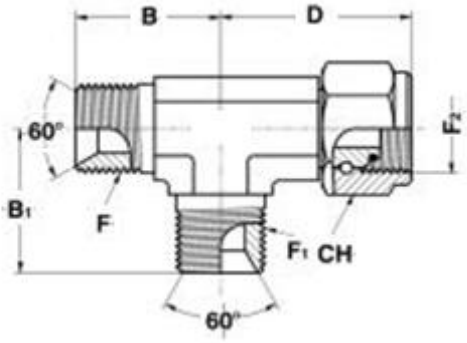

Part Number	F BSPP	F1 BSPP	F2 BSPP	B	B1	D	CH	Material	Finish
47498141	1/4-19	1/4-19	1/4-19	27	27	28	19	STL	ZND
47498145	1/2-14	1/2-14	1/2-14	34	34	44.5	27	STL	ZND
47490260	3/4-14	3/4-14	3/4-14	41	41	55.5	32	STL	ZND

60D Cone (ISO 8434-6)
Tee, Branch – Swivel Nut BSPP

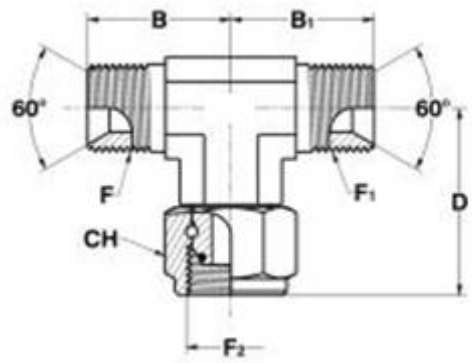

Part Number	F BSPP	F1 BSPP	F2 BSPP	B	B1	D	CH	Material	Finish
47530741	1/4-19	1/4-19	1/4-19	27	27	28	19	STL	ZND
47490262	1/2-14	1/2-14	1/2-14	34	34	44.5	27	STL	ZND

60D Cone (ISO 8434-6)
Union Cross Male BSP

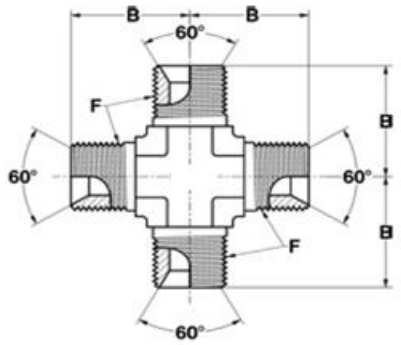

Part Number	F BSPP	Tube OD MM	Tube OD Inch	B	Material	Finish
92071566	G3/8-19A	10	3/8	29	STL	ZND

BSPP 60D Cone Plugs ISO 8434-6	PNMK4S Plug	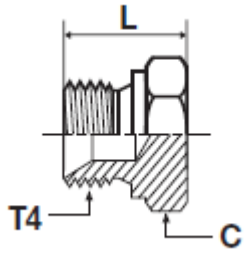		
Part Number	**Description**	**Thread**	**C**	**L**
84492989	Plug, 60D 1/4-19 BSPP	1/4-19	19	19

RYCO Hydraulics M7-1809	Male Connector DIN 7631	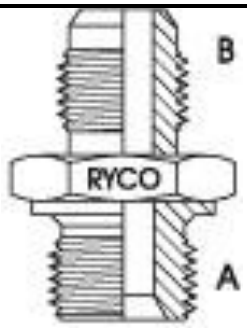
Part Number	**Description**	
84168361	Connector, 37D male 9/16-18 x M18x1.5 60D ORB	

ALFAGOMMA	90D BSP O-RIng Female Swivel 60D Cone Solid Bent Tube	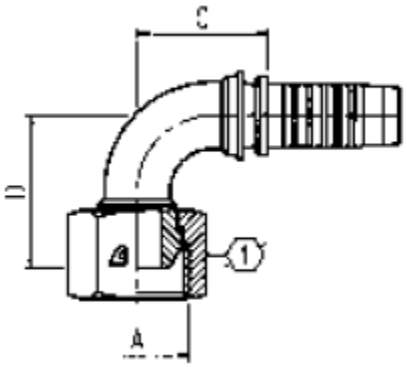					
Part Number	**Description**	**Dash No.**	**Hose ID**	**A**	**C**	**D**	**Hex**
84177564	Elbow, Fem SWVL 60D cone Solid Bent Tube	-06	3/8	1/2-14	33mm	36mm	27mm
84173774	Elbow, Fem SWVL 60D cone Solid Bent Tube	-08	1/2	1/2-14	40mm	37.5mm	27mm

Branch Tee
37 FL male
BSPP O-Ring
w/Retaining
Ring (ISO 1179)

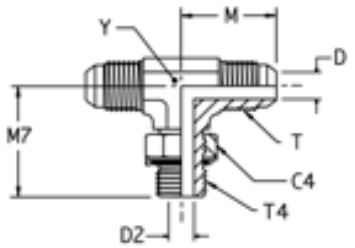

Part Number	Tube Size mm	(37 FL) T UN/UNF-2A	T4 BSPP	C4	D	D2	M	M7	Material	Finish
47902899	10	9/16-18	3/8-19	22	8	10	29	36.5	STL	ZND
84212758	18,20	1-1/16-12	3/4-14	36	16	16	42	50	STL	ZND

Hydraulic 4 bolt
Split Flange-
Inch (SAE
J518) (O&K
369005)

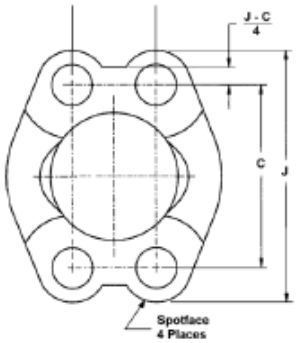

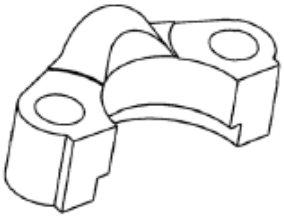

Part Number	Description	C	J	BAR	PSI		
70921115	Half Flange .75 in.	1.875	2.56	210	3,000		
70921116	Half Flange 1 in.	2.062	2.75	210	3,000		
70921117	Half Flange 1.25 in.	2.312	3.12	210	3,000		
70921118	Half Flange 1.5 in.	2.750	3.69	210	3,000		
70921558	Half Flange 2 in.	3.062	4.00	210	3,000		
70921599	Half Flange 2.5 in.	3.500	4.56	210	3,000		
727077	Half Flange .75 in.	2.000	2.81	420	6,000		
991420	Half Flange 1in.	2.250	3.19	420	6,000		
625571	Half Flange 1.25 in.	2.625	3.75	420	6,000		
70935660	Half Flange 1.50 in.	3.125	4.44	420	6,000		

SAE 6000 FOR – A407716
PSI
90D ADJ
MALE ORFS
FLANGE

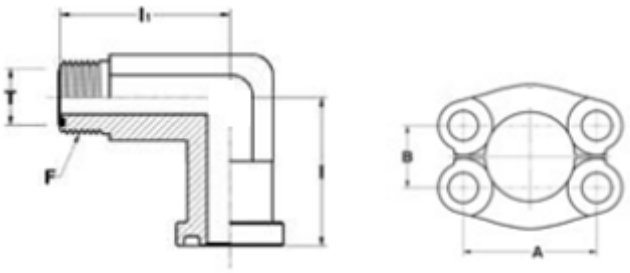

Part Number	Description	Flange	T	F	I	I1	A	B
84560190	Elbow 90 ORFS 1in Tube	1”	7/8-1”	1-7/16-12	72	70	57.15	27.76
84560191	Elbow 90 ORFS 1-1/4 Tube	1”1/4	7/8-1”	1-7/16-12	70	72	66.68	31.75
84560192	Elbow 90 ORFS 1-1/4 Tube	1”1/4	1”1/4	1-11/16-12	70	72	66.68	31.75
48115789	Elbow 90 ORFS 1-1/2 Tube	1”1/2	1”1/2	2-12	80	84	79	36.5

SAE 3000
PSI
90D ADJ
MALE ORFS
FLANGE
FOR – A407211

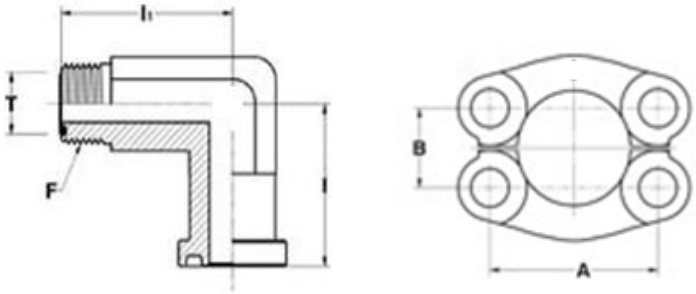

Part Number	Description	Flange	T	F	I	I1	A	B
47446675	Elbow 90 ORFS 1 in Tube	1”	7/8 – 1”	1-7/16-12	54	61	52.37	26.19
48116822	Elbow 90 ORFS 1-1/2 in Tube	1-1/2”	1-1/2”	2-12	75.5	75	69.85	35.71

Hydraulic Flange Elbow 24 Deg / Metric Flareless - BFW

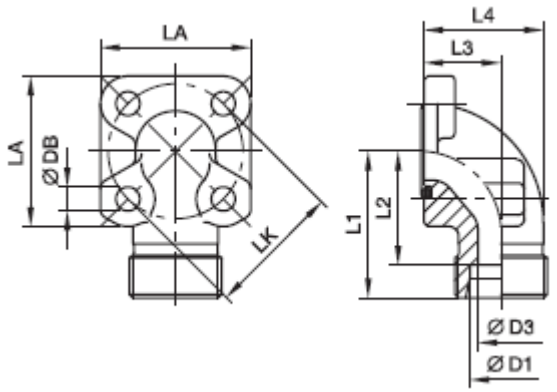

Part Number	LK	D1	D3	L1	L2	L3	L4	LA	DB	Screw 2 Pieces	Screw 2 Pieces	O-Ring
51583159	35	12L	10	38	31	16.5	26.5	40	6.4	M6X22	M6X35	20X2.5
51583160	35	16S	12	38	29.5	20.0	31.0	40	6.4	M6X22	M6X40	20X2.5
51583161	35	20S	16	45	34.5	25.0	38.0	40	6.4	M6X22	M6X45	20X2.5
51583162	40	18L	15	38	30.5	22.5	36.5	42	6.4	M6X22	M6X22	26X2.5
51583163	40	22L	19	38	30.5	22.5	36.5	42	6.4	M6X22	M6X22	26X2.5
51596707	40	28L	22	40	32.5	28.0	43	42	6.4	M6X20	M6X50	26X2.5

SAE Flange Code 61 / ORFS end

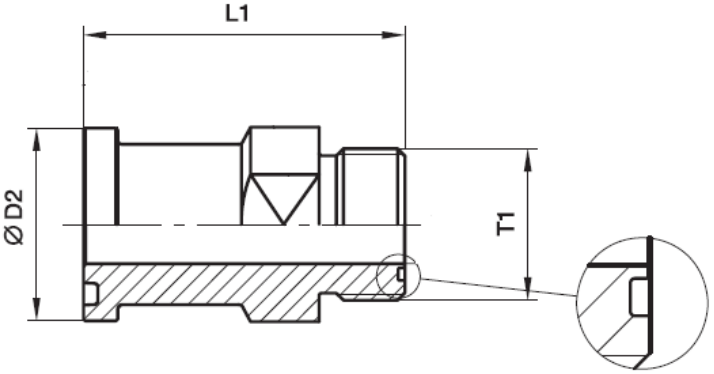

Part Number	Description	T1 Tube	T1 ORFS Thread	D2	L1
51472421	Connector, Hyd, ORFS 1 in Tube	1”	1-7/16-12	1.75	2.80

Parker Male
Pipe Elbow
SAE 140230
2107

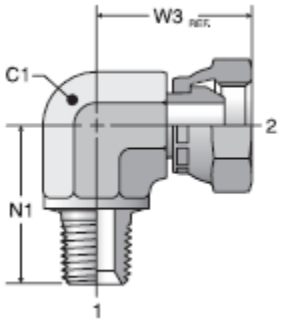

Part Number	Description	1	2	N1	C1	W3
87508052	ELBOW,90 M 1/4-18 NPTF F SWVL NPSM 1/4-18	1/4-18	1/4-18	1.09	9/16	1.06
84270870	ELBOW,90 M 1/2-14NPTF F SWVL NPSM 1/2-14	1/2-14	1/2-14	1.47	7/8	1.40

SAE J1508
Spring Clamps
Style CTB

Part Numbers listed in this table can also be provided with Finish "DOR" per STPA020 (Or) Magni 511 (Or) Magni 585.

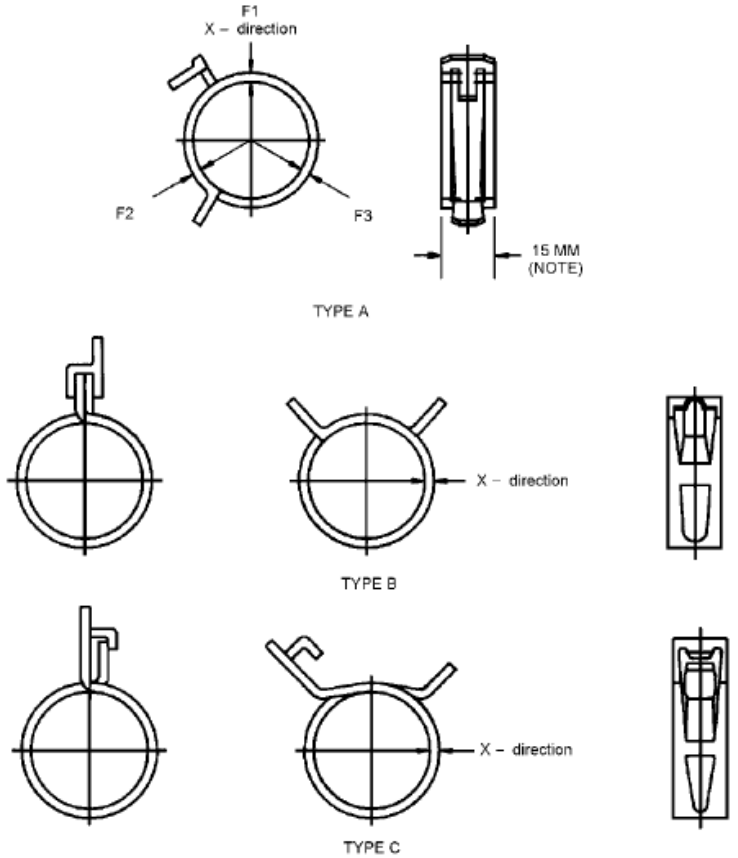

Part Number	Description	Open Dia	Closed Dia	Width	Mat/Fin	Color
87436933	Clamp CTB-12 Style B	13.9	11.7	8.4	CST/ZND	
87436932	Clamp CTB-15 Style C	16.5	13.9	12	CST/ZND	
87584302	Clamp CTB-18 Style C	19	16	15	CST/ZND	
87019540	Clamp CTB-19 Style C	20.2	17.8	15	CST/ZND	
87443510	Clamp CTB-20 Style A	21.6	18.4	15	CST/ZND	
84375325	Clamp CTB-22 Style A	24.5	20.5	15	CST/DOR	BLACK
87019541	Clamp CTB-23 Style C	24.7	21	15	CST/ZND	
82019905	Clamp CTB-24, width 12mm	26	22	12	HTS/ZND	
87443511	Clamp CTB-24 Style C	26	22	15	CST/ZND	
87742351	Clamp CTB-27 Style A	28.9	25.2	15	CST/ZND	
84375326	Clamp CTB-29 Style A	31.5	27	15	CST/DOR	BLACK
84144166	Clamp CTB-30 Style A	32.5	28	15	CST/ZND	
47983146	Clamp CTB-32 Style A	34.5	29.5	15	CST/ZND	
87432275	Clamp CTB-35 Style A	38	31.5	15	CST/ZND	
51550910	Clamp CTB-47 Style A	50.0	41.5	15	CST/ZND	
51550915	Clamp CTB-51 Style A	54.0	44.0	15	CST/ZND	GREY
51550916	Clamp CTB-53 Style A	55.0	46.0	15	CST/ZND	
51550917	Clamp CTB-58 Style A	61.0	50.0	15	CST/ZND	BLACK

Flat Washer
Iveco 11-0410
Dimensions shown are in mm

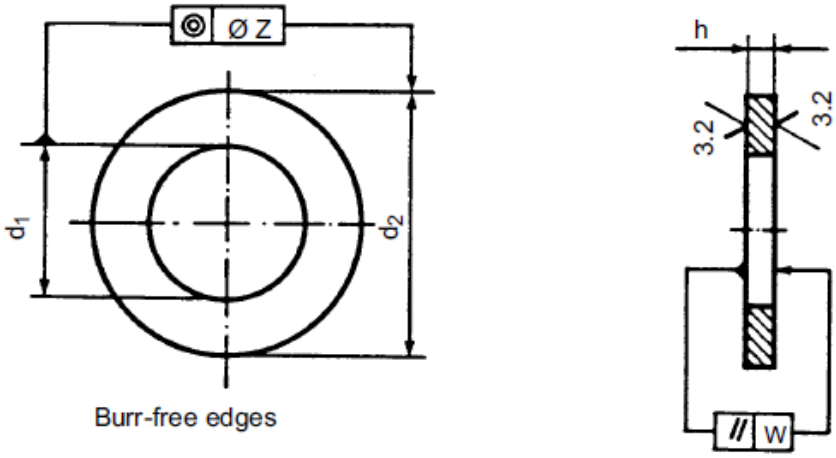

Part Number	Nom. Screw Dia	d_1	d_2	h	w	Z	Material	
							Iveco STD.	Finish
17094904	8	8.40 – 8.62	15.57 – 16	1.6 ±0.2	0.10	0.36	IS 15-2891 FE 360D/RQ ST 37-2 (140 HV)	I.S. 18-1101 RIV/EC 5
17095024	10	10.50 – 10.77	17-57 - 18	1.6 ±0.2	0.10	0.36	IS 15-2861 FE 780 F (300 HV)	I.S. 18-1101 RIV/EC 5

Flat Ended Dowels
Iveco 11-0637
Dimensions shown are in mm

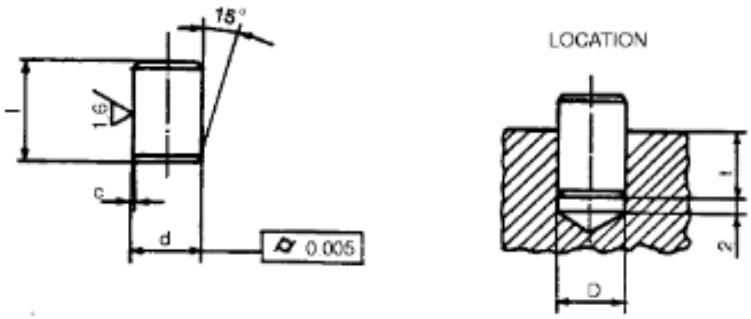

Part Number	d	d Tol.	c	l	Material	Finish
17275510	10	0 -0.022	0.6	15	5.8	PLN

Cable Tie
Iveco 11-0766
Dimensions shown are in mm

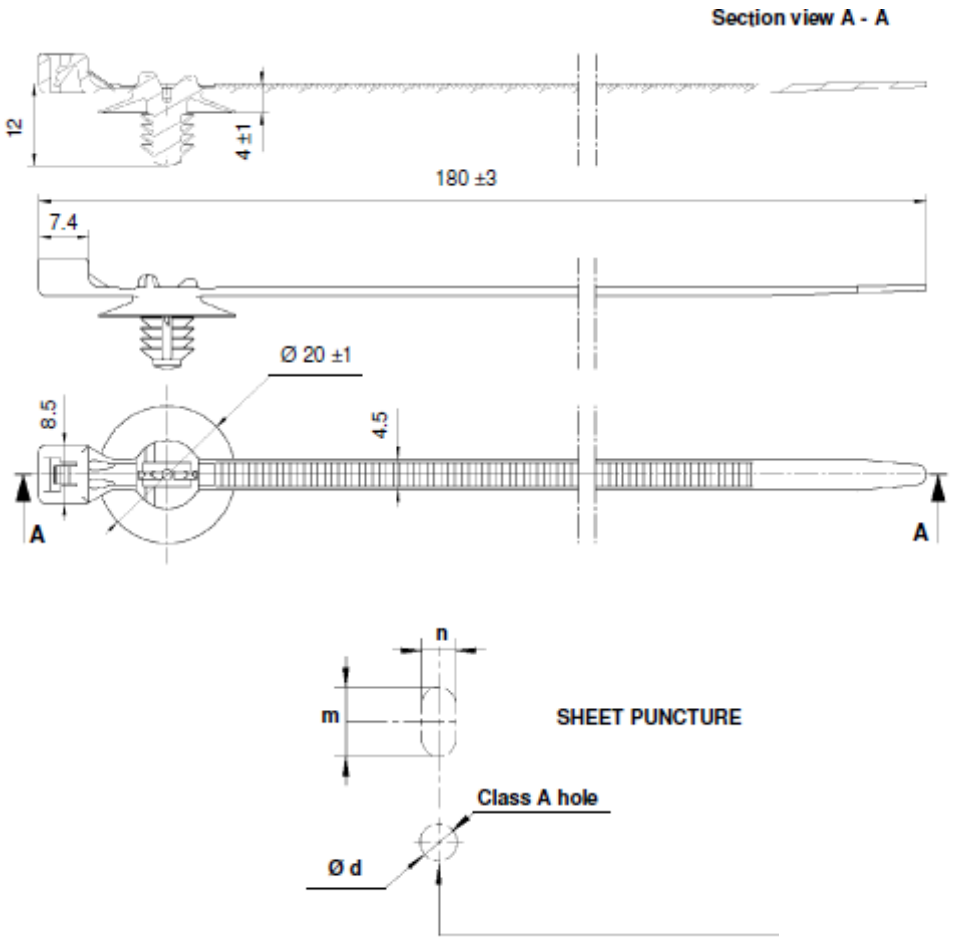

Part Number	d		m		n		Tie Tensile Strength	Color	Material	
									Symbol	Iveco STD.
17059987	6.5	+0.2 0	12	+0.2 0	6	+0.2 0	≥ 100 N	Black	PA 80.100	15-5232

Iveco 11-4243 Adjustable Fittings Threaded Fillers For Rings (Bolt, Banjo)
Dimensions shown are in mm
See **Iveco 11-4243** for Material and Finish details.

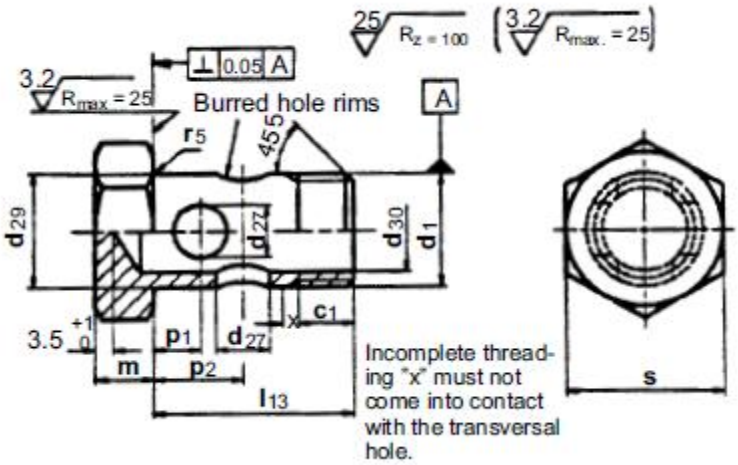

Part Number	d1 6g	c1 min	l13 ±0.2	d27 H14	d29 h12	d30 H14	m	p1 ±0.2	P2 ±0.2	r5	s	Mat'l	Finish
16511311	M14X1.5	11	26	4.5	14	9	6	5.5	9.5	0.2	19	STEEL	Fe/Zn 12 IV

Ring Seal Iveco 11-4311 (for fittings with tapered seat 24º)
Dimensions shown are in mm

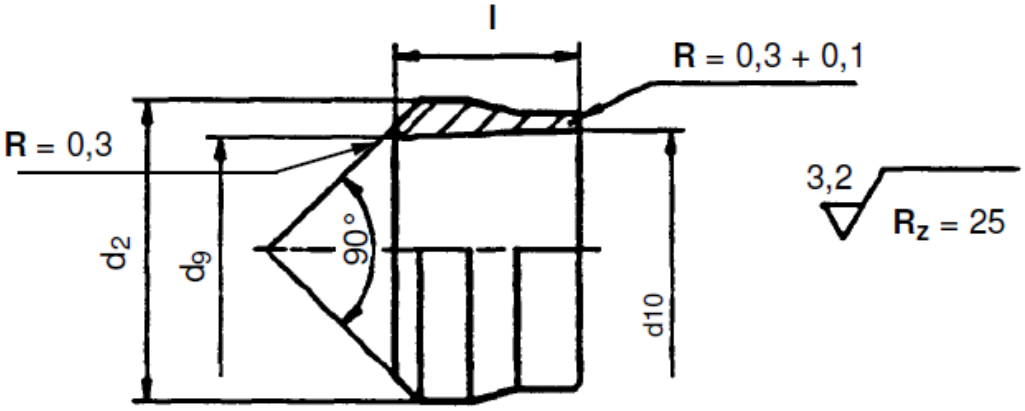

Part Number	Pipe OD	d_2	d_9 B11	d_{10} ±0.1	l	Material	
						Iveco STD.	code
16510140	10	13	10	10.7	9.2	Brass 10-2999	30002

Iveco 11-4730 Screw Plugs With External Hexagon Heads

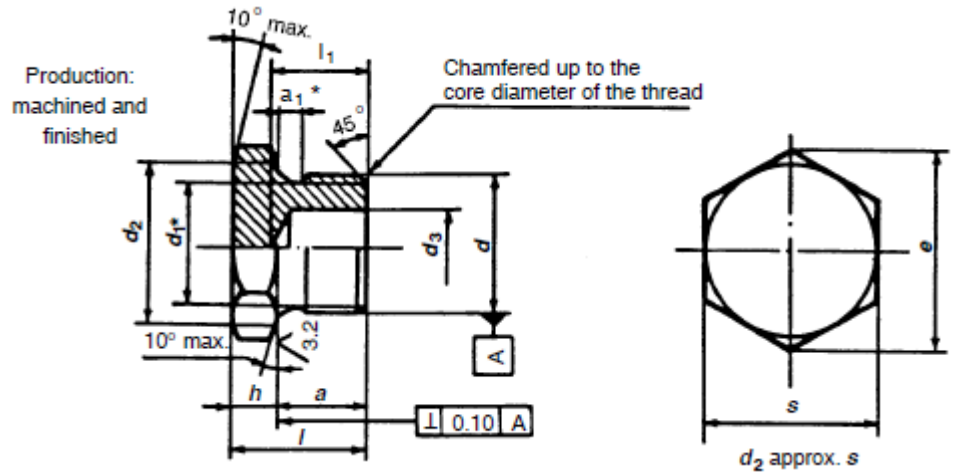

Part Number	d	a	a_1	d_1	d_3 max.	h	l	l_1	s	Material	Finish
16992315	M14x1.5	9	3	11.55	8	5	14	12	19	5.8	18-1101 A34

Iveco 11-4730 Screw Plugs With External Hexagon Heads. (For alternate manufacturing methods see Iveco 11-4730)

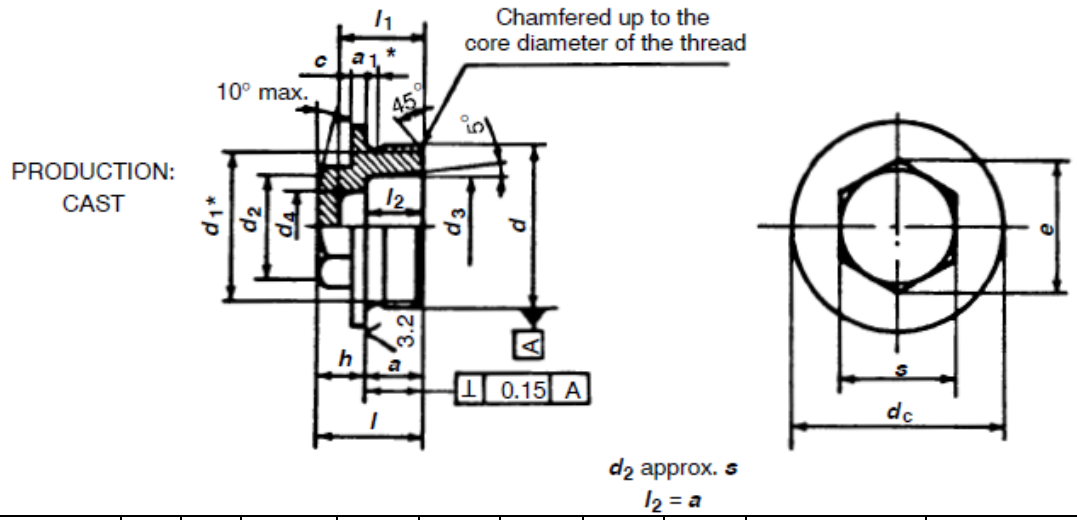

Part Number	d	a	a_1	d_1	d_3 max.	h	l	l_1	s	Material	Finish
16993011	M30x1.5	12	3	27.55	20	10.5	22.5	18	22	5.8	18-1102 778

O-Rings
Iveco 11-4818
Dimensions shown are in mm

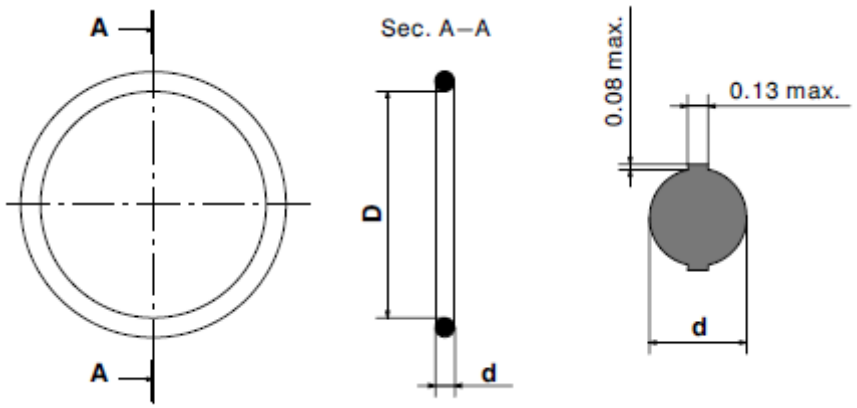

Part Number	Size	D Nom	D Tol.	d	d Tol.	Material	
						Iveco STD.	Symbol
17281381	110	9.19	+/- 0.18	2.62	+/- 0.08	18-0484 E5	OR-O/200
17282180	118	21.89	+/- 0.15	2.62	+/- 0.08	18-0484 E1	OR-O/130
17282181	118	21.89	+/- 0.15	2.62	+/- 0.08	18-0484 E5	OR-O/200
17282280	119	23.47	+/- 0.15	2.62	+/- 0.08	18-0484 E1	OR-O/130
17282281	119	23.47	+/- 0.25	2.62	+/- 0.08	18-0484 E5	OR-O/200
17282381	120	25.07	+/- 0.25	2.62	+/- 0.08	18-0484 E5	OR-O/200
17283181	128	37.77	+/- 0.30	2.62	+/- 0.08	18-0484 E5	OR-O/200
17292281	250	126.59	+/- 0.38	3.53	+/- 0.1	18-0484 E5	OR-O/200
17293481	262	177.40	+/- 0.6	3.53	+/- 0.1	18-0484 E5	OR-O/200

JIS B2401 (Japanese Industrial Standard)

O-Rings

G-General industry
P-Equipment moving
G-for fixing
V-Vacuum Flanges

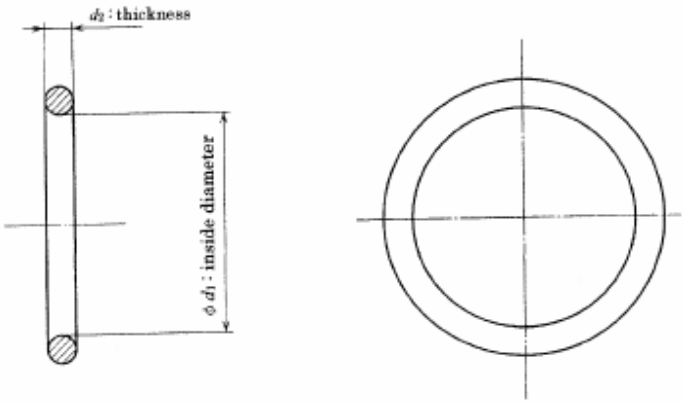

Part Number	Description	Size	ID/Tol.	Width	Mat.
84377845	O-RING, 5.8 X 1.9 MM 1A	1AP6	5.8±0.15	1.9±0.08	1A
84377846	O-RING, 24.4 X 3.1MM 1B	1BG25	24.4±0.25	3.1±0.10	1B
84378594	O-FING, 25.5 X 2 MM 1A	1AS26*	25.5±0.15	2±0.006	1A
84377847	O-RING, 25.7 X 3.5MM 1B	1BP26	25.7±0.26	3.5/±0.10	1B
84377848	O-RING, 33.7 X 3.5 MM 1B	1BP34	33.7±0.33	3.5/±0.10	1B
51545120	O-RING, 41.7 X 3.5 MM 1A	1AP42	41.7±0.38	3.5/±0.10	1A
84377851	O-RING, 84.4 X 3.1 MM 1B	1BG85	84.4±0.73	3.1±0.10	1B
84378593	O-RING, 84.4 X 3.1 MM 1A	1AG85	84.4±0.73	3.1±0.10	1A

*Size not listed in Standard

BSPT Lube
STR Fittings

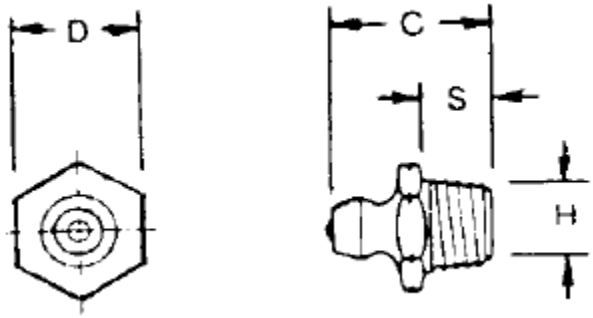

Part Number	Description	C	S	D	Mat./fIN.
84378602	Fitting, lube 1/8-28 BSPT	15MM	5.5MM	11MM	STL/ZND

FOR HYD
Bulkhead lock
nuts

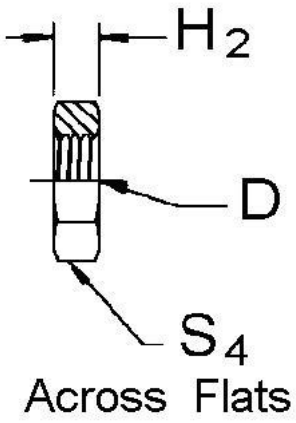

Part Number	Description	H2	D	S4	Mat.	Fin.
84406852	Nut, BH Lock ¾-16	8	3/4-16	24	STL	ZND

Union Male BSPP- Male BSPP
60D Cone End
ISO 8434-6

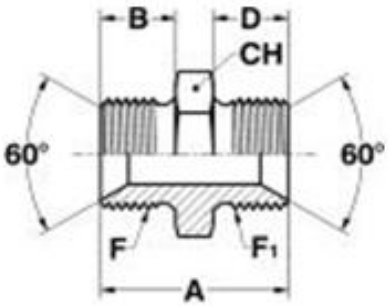

Part Number	F BSPP	F1 BSPP	A	B	D	CH	MAT	FIN
84421925	1/4-19	1/4-19	28	11	11	19	STL	ZND
47489320	1/4-19	3/8-19	30	11	12	22	STL	ZND
47499743	1/4-19	1/2-14	33	11	14	27	STL	ZND
47489346	3/8-19	3/8-19	31	12	12	22	STL	ZND
47499783	3/8-19	1/2-14	34	12	14	27	STL	ZND
47489356	1/2-14	1/2-14	35	14	14	27	STL	ZND
47489374	1/2-14	3/4-14	40	14	16	32	STL	ZND
47489377	3/4-14	3/4-14	44	16	16	32	STL	ZND
47552617	3/4-14	1-11	46	16	19	41	STL	ZND
47860697	2-11	2-11	76	25	25	70	STL	ZND

Union Male BSPP- Swivel Nut BSPP
60D Cone End
ISO 8434-6

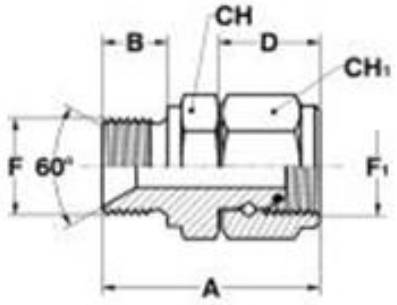

Part Number	F BSPP	F1 BSPP	A	B	D	CH	CH1	MAT	FIN
47489415	1/4-19	1/4-19	36	11	17	19	19	STL	ZND
47489429	3/8-19	3/8-19	39	12	19	22	22	STL	ZND
47489434	1/2-14	1/2-14	46.5	14	21.5	27	27	STL	ZND
47489435	3/4-14	3/4-14	53.5	16	26.5	32	32	STL	ZND
47530739	1/4-19	3/8-19	38	11	19	19	22	STL	ZND
47561877	1/4-19	1/2-14	42.5	11	21.5	19	27	STL	ZND
47497952	3/8-19	1/2-14	44	12	21.5	22	27	STL	ZND
47489439	1/2-14	3/4-14	51.5	14	26.5	27	32	STL	ZND
47497970	3/4-14	1/2-14	48.5	16	21.5	32	27	STL	ZND

60D Cone End (ISO 8434-6)
Union, Bulkhead Male BSPP- Male BSPP

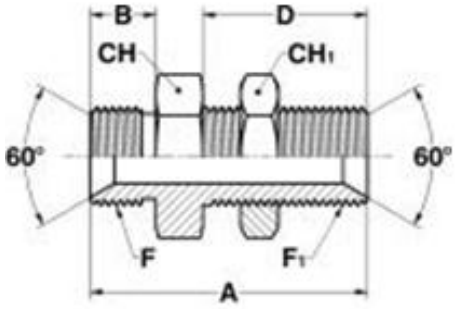

Part Number	F BSPP	F1 BSPP	A	B	D	CH	CH1	MAT	FIN
47552618	1/4-19	1/4-19	46	11	28	19	19	STL	ZND
47489447	1/2-14	1/2-14	59	14	35	30	30	STL	ZND
92070189	3/8-19	3/8-19	52	12	32	24	24	STL	ZND

60D Cone End (ISO 8434-6)
Connector Male BSP – Male Metric with O.R. and retaining ring ISO 9974 ports

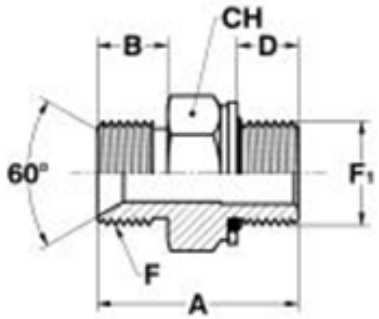

Part Number	F BSPP	F1 (-6g)	A	B	D	CH	MAT	FIN
47497257	G1/4-19 A	M16X1.5	32	11	11	22	STL	ZND
47497269	G3/8-19 A	M16X1.5	35	12	11	22	STL	ZND
47498893	G3/8-19 A	M18X1.5	36	12	12.5	24	STL	ZND
47497769	G1/2-14 A	M18X1.5	38	14	12.5	24	STL	ZND

60D Cone End (ISO 8434-6)
Connector Male BSP – Male Metric with elastomer seal ISO 9974 ports

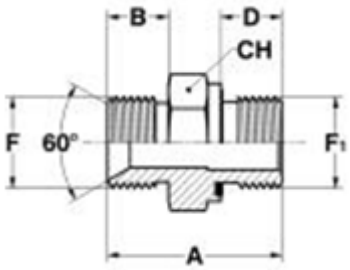

Part Number	F BSPP	F1 (-6g)	A	B	D	CH	MAT	FIN
47561738	G3/8-19 A	M18X1.5	35	12	12	24	STL	ZND
47561794	G1/2-14 A	M22X1.5	40.5	14	14	27	STL	ZND

HMTX Union
37D Flare
ends
Non SAE
070101
Parker
4HMTXS

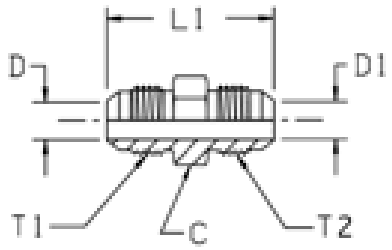

Part Number	Description	C	D	D1	L	T1	MAT	FIN
84421926	Union, M 37D 7/16-20	13	4	4	35	7/16-20	STL	ZND

Reduced
Flange
Bolts
(All Dimensions
in inches)

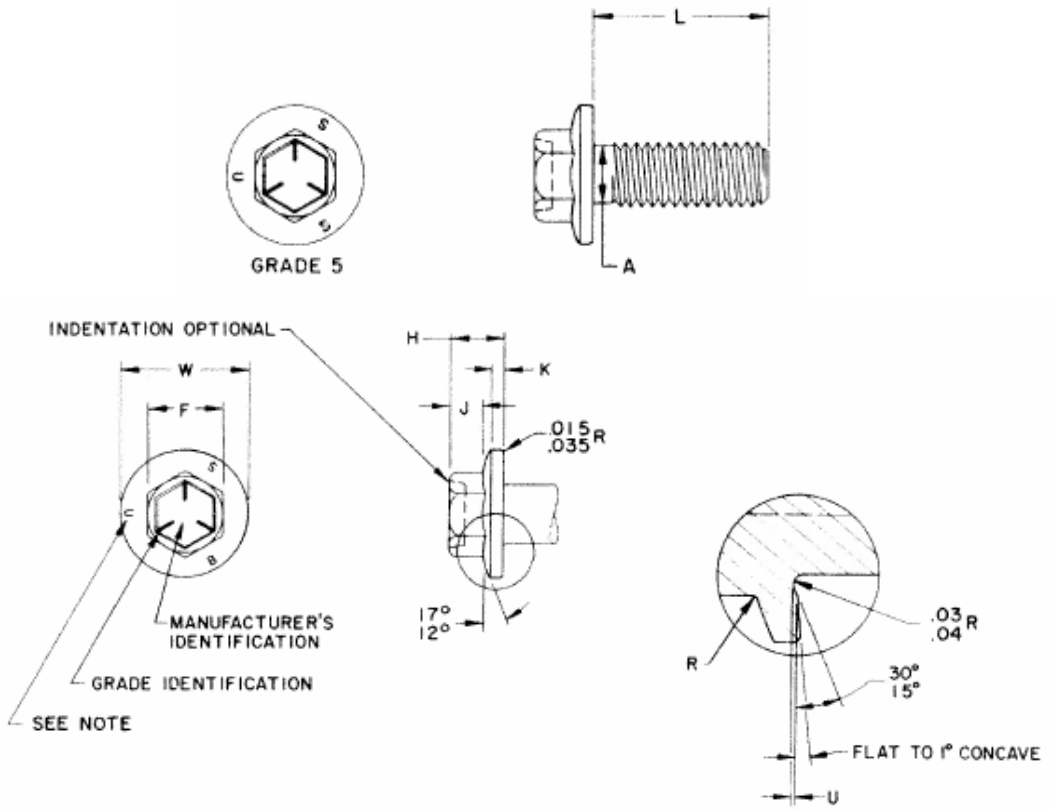

Part Number	Size	A Max	L	F Max	W Max	H Max	K Min	J Min	U Max	R Max	MAT	FIN
83925616	5/16-18	0.28	0.5	0.375	0.685	0.300	0.045	0.191	0.015	0.015	5	PHC
83925617	5/16-18	0.28	1.0	0.375	0.685	0.300	0.045	0.191	0.015	0.015	5	PHC
83925618	3/8-16	0.34	0.75	0.500	0.802	0.330	0.050	0.213	0.015	0.018	5	PHC
83948055	7/16-14	0.40	0.75	0.565	0.927	0.385	0.060	0.254	0.015	0.024	5	ZND

Iveco 11-0102 Hexagon Head Bolts

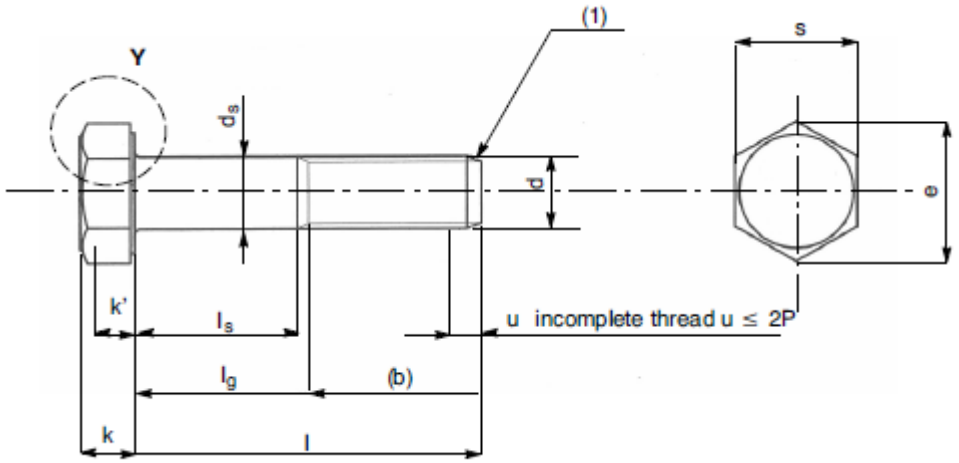

Part Number	Dia Nom.	Pitch	Length l	Thread Length (b)	s	k	Mat'l	Finish
16602324	M5	0.8	25	FULL	8	3.5	8.8	RIV/EC 5 I.S. 18-1101
16604124	M6	1	40	18	10	4	8.8	RIV/EC 5 I.S. 18-1101
16605424	M8	1.25	16	FULL	13	5.3	8.8	RIV/EC 5 I.S. 18-1101
16605724	M8	1.25	30	FULL	13	5.3	8.8	RIV/EC 5 I.S. 18-1101
16606124	M8	1.25	50	22	13	5.3	8.8	RIV/EC 5 I.S. 18-1101
16606324	M8	1.25	60	22	13	5.3	8.8	RIV/EC 5 I.S. 18-1101
16606424	M8	1.25	65	22	13	5.3	8.8	RIV/EC 5 I.S. 18-1101
16606524	M8	1.25	70	22	13	5.3	8.8	RIV/EC 5 I.S. 18-1101

Iveco 11-0118 Flanged Hexagon Head Bolts (Heavy Series)

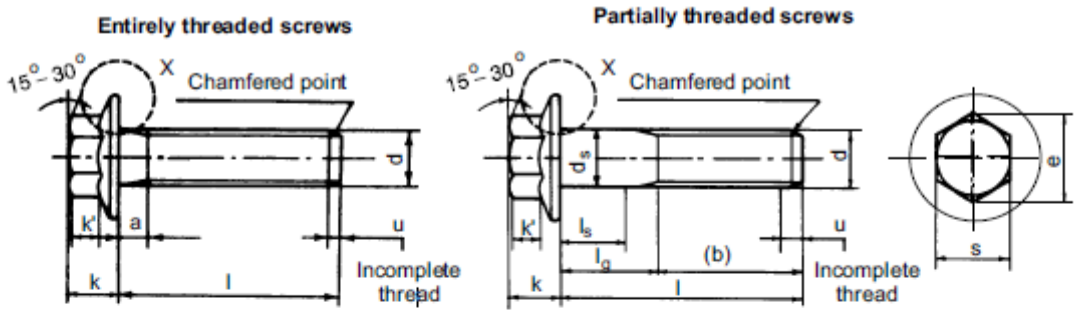

a max. = 3P
l_s = l_g max. - 5 P
u max. = 2P

Part X

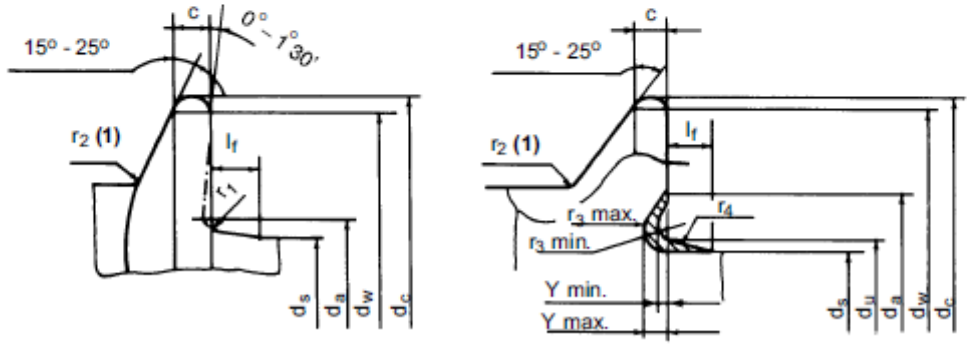

Type F Type U

Part Number	Dia Nom.	Pitch	Length l	Thread Length (b)	s	k	Mat'l	Finish
16586224	M8	1.25	16	FULL	13	8.1	8.8	RIV/EC 5
16586524	M8	1.25	30	FULL	13	8.1	8.8	RIV/EC 5
16592624	M8	1.25	80	22	13	8.1	8.8	RIV/EC 5
16598324	M8	1.25	100	22	13	8.1	8.8	RIV/EC 5
16776924	M8	1.25	130	28	13	8.1	8.8	RIV/EC 5
16587824	M10	1.5	60	26	15	9.2	8.8	RIV/EC 5
16596624	M10	1.5	125	26	15	9.2	8.8	RIV/EC 5
16588324	M12	1.75	45	Full	16	11.5	8.8	RIV/EC 5

Iveco 11-0119 High Tensile Flanged Hexagon Head Bolts (Heavy Series)

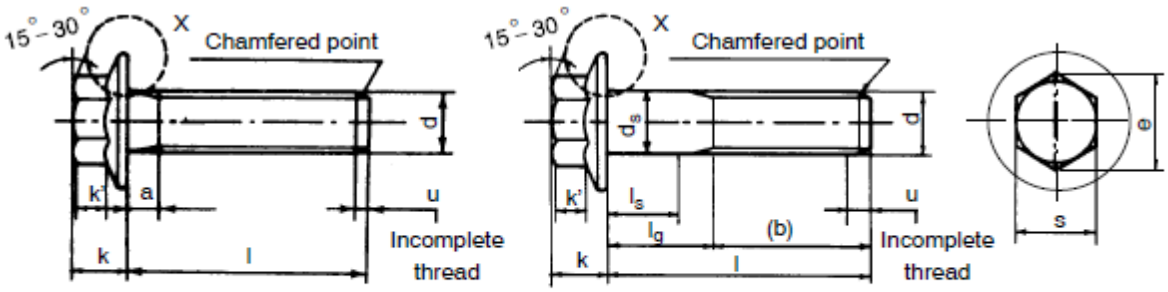

a max. = 3P
l_s = l_g max – 5 P
u max. = 2P

DETAIL X

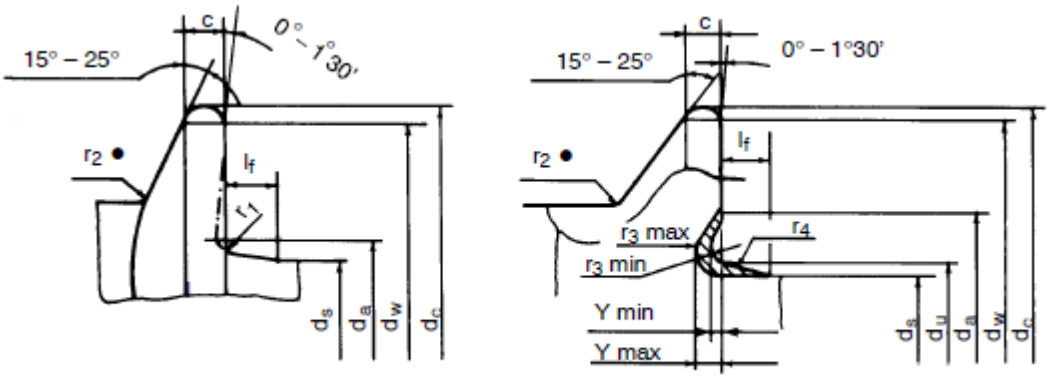

Type F Type U

Part Number	Dia Nom.	Pitch	Length l	Thread Length	s	k	Mat'l	Finish
16673635	M8	1.25	20	Full	13	8.1	R10	GEO 500-5
16678135	M12	1.75	45	Full	16	11.5	R10	GEO 500-5

Iveco 11-0120 Flanged Hexagon Head Through Bolts (Heavy Series)

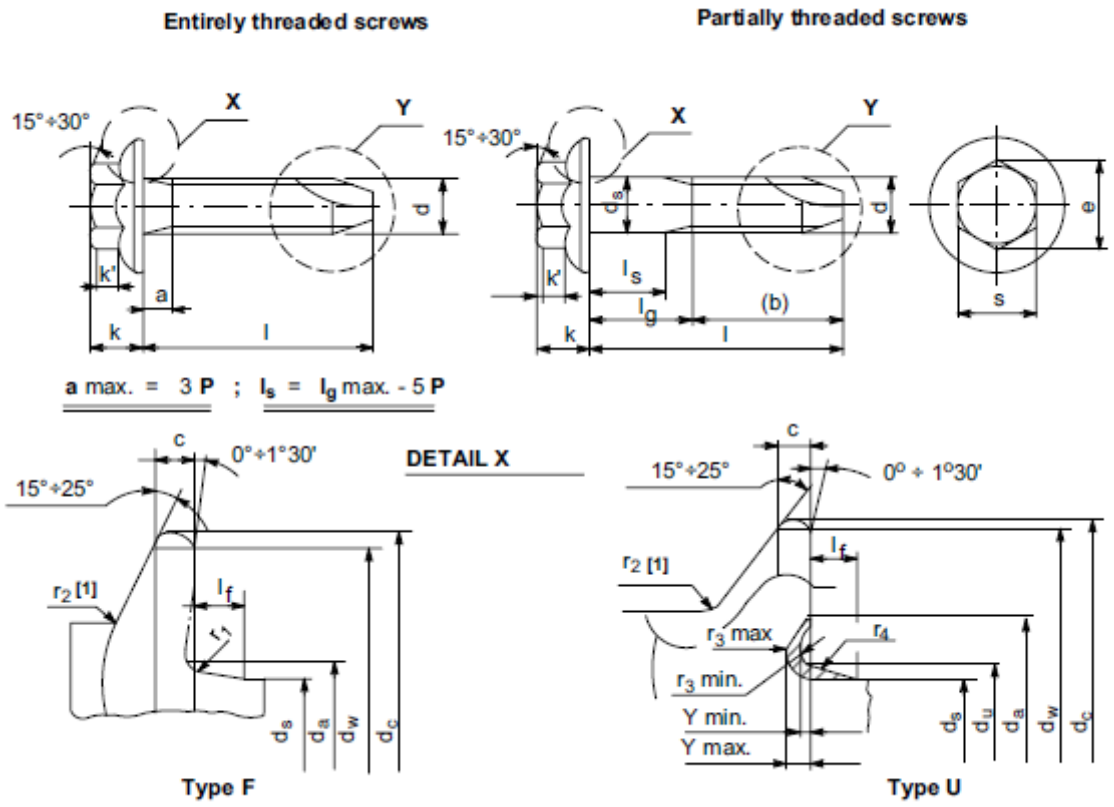

Part Number	Dia Nom.	Pitch	Length l	Thread Length	s	k	Mat'l	Finish
18137825	6	1	16	FULL	10	6	8.8	RIV/EC 5 F

Iveco 11-4320 Rectangular Section Sealing Washer

Figure 1

- Form A -

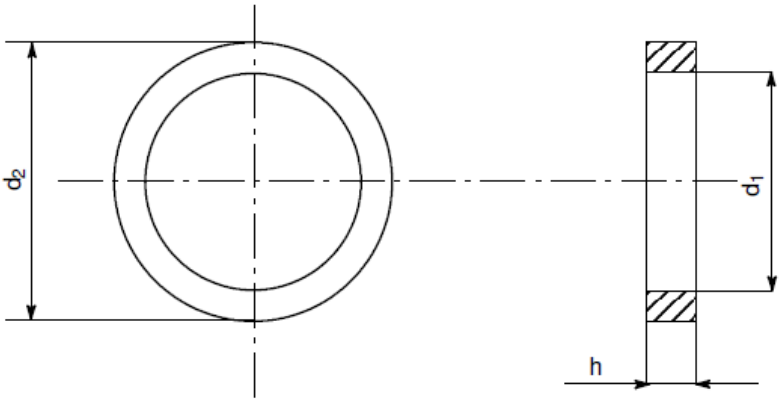

Part Number	d1 +0.3 0	d2 0 -0.2	h ±0.2	Thread use	Material
16780660	6.7	9.4	1	M6X1	Copper (11-4320)
16508560	26.3	30.9	2	M26X1.5	Copper (11-4320)

Ford Flange Bolts	Ford Std MB100.011

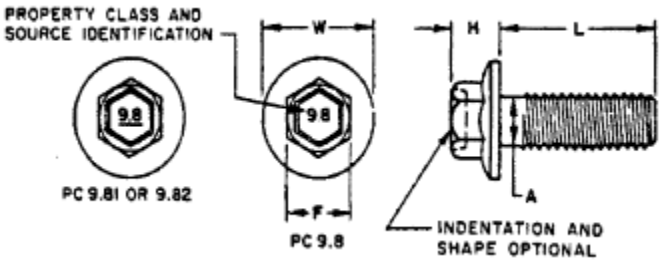

Part Number	Description	F	H	W	L		MAT	FIN
9995155	Bolt, Flange M6 x 10 9.8 ZNM	8	6.9	13.6	10		9.8	ZNM
83926880	Bolt, Flange M6 x 12 9.8 ZNM	8	6.9	13.6	12		9.8	ZNM
9992979	Bolt, Flange M6 x 16 9.8 ZNM	8	6.9	13.6	16		9.8	ZNM
82859922	Bolt, Flange M6 x 20 9.8 ZNM	8	6.9	13.6	20		9.8	ZNM
9995013	Bolt, Flange M8 x 20 9.8 ZNM	10	8.3	17	20		9.8	ZNM
83972853	Bolt, Flange M8 x 30 9.8 ZNM	10	8.3	17	30		9.8	ZNM
83928604	Bolt, Flange M10 x 20 9.8 ZNM	13	9.3	20.8	20		9.8	ZNM

Ford Pan Head w/tooth lock washer	Ford Std MB202.01 C/R-Z Drive

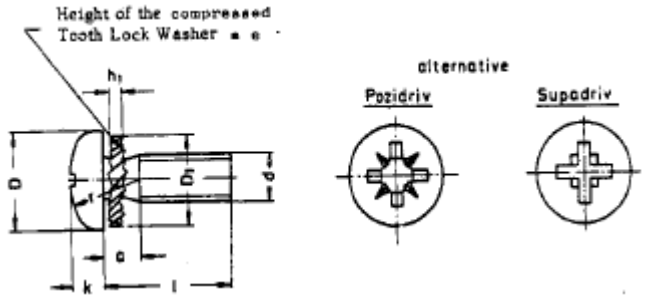

Part Number	Description	D	h1	l	k	g	MAT	FIN
83963569	SCREW W/WASHER M4X12	8	1-1.5	12	2.8	2.9	4.8	ZND

Ford Hexagon screws W/Paint clearing feature — Ford Std SB 150.01

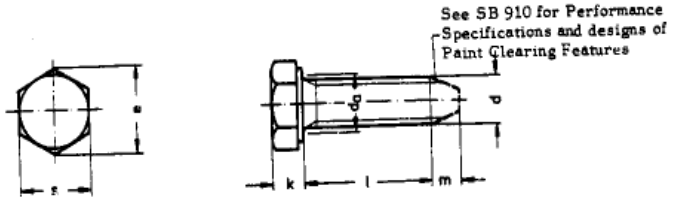

Part Number	Description	d	l	K	s	Pitch	MAT	FIN
82880826	Screw, Hex M6 x 25 8.8 ZND	M6	25	4	10	1	8.8	ZND
81872099	Screw, Hex M8 x 16 8.8 ZND	M8	16	3.3	13	1.25	8.8	ZND

Ref. Ford MC12.03 Hexagon screws W/Conical washers

Ref Ford MC900.15 for conical washer

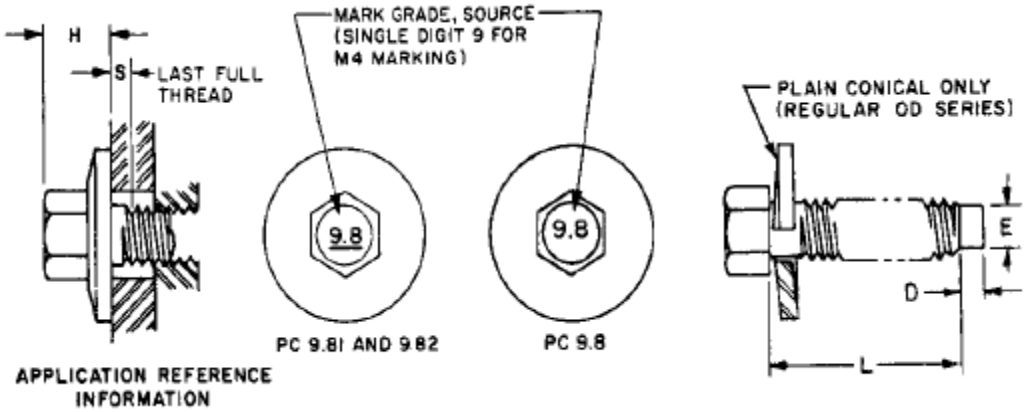

Part Number	Size	L Length	Washer OD Max.	Nom. Width Across Flats (ref)	D Pilot Length Max.	E Pilot Diameter	S Max.	H Max.	MAT	FIN
83992627	M8X1.25	25	22.6	10	3.0	6.0	2.0	9.56	9.8	ZND

BSPP int.
Hex Plug
W/elastomer
seal ISO
1179 ports

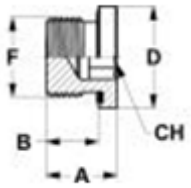

Part Number	Description	F	A	B	D	CH	MAT	FIN
84289782	PLUG, HEX SOC, G 1/8 A	G 1/8 A	12	8	14	5	STL	ZND
47852129	PLUG, HEX SOC, G 1/4 A	G 1/4 A	17	12	19	6	STL	ZND
84289783	PLUG, HEX SOC, G 3/8 A	G 3/8 A	17	12	22	8	STL	ZND
9837624	PLUG, HEX SOC, G 1/2 A	G 1/2 A	19	14	27	10	STL	ZND

BSPP Ext. FOR A301263
Hex Plug
W/O-ring and
Retaining
Ring ISO
1179-3

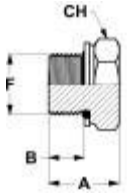

Part Number	Description	F	A	CH	B		MAT	FIN
84533158	PLUG, ¼ BSPP	G1/4A	20	19	10		STL	ZND

WH-M-KDS Parker
High WH10LMKDSOMD
Pressure
Banjo
Elbow

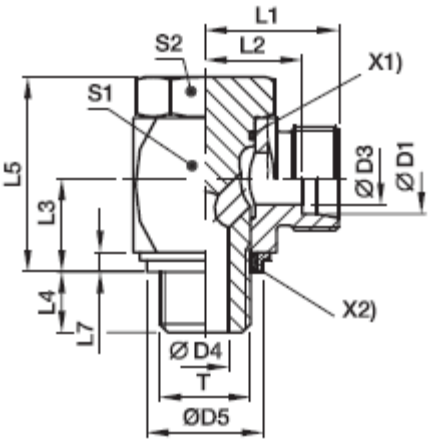

Part Number	S1	S2	S3	T	D3	D4	D5	D6	L1	L2	L3	L4	L5	L6	L7
1768202	22	19	19	M14X1.5	8	6	18.9	22.5	22.5	15.5	14	12	30	30	3

WH-R-KDS High Pressure Banjo Elbow — EO 24° cone end / Male BSPP thread with soft seal ring

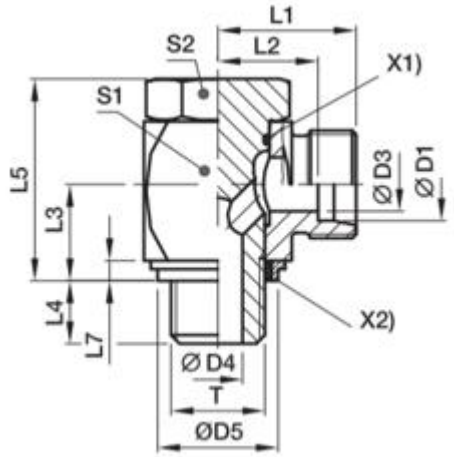

Part Number	Series	D1	T	D3	D4	D5	L1	L2	L3	L4	L5	L6	L7	S1	S2	S3
2479658	S	08	G 1/4 A	5	5	18.9	23.5	16.5	14	12	30.5	31	3	22	19	19

Banjo Elbow EO 24° cone end / Male Metric thread with metal seal ring — Parker SWVE-M

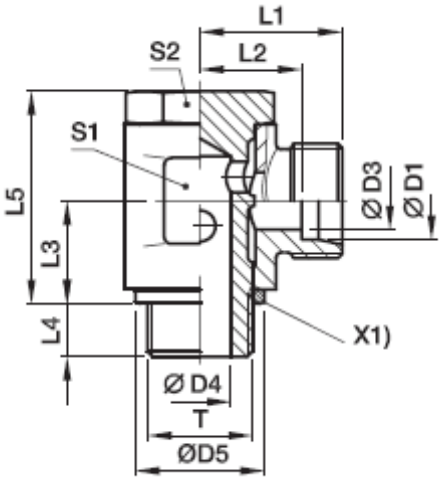

Part Number	Series	D1	T	D3	D4	L1	L2	L3	L4	L5	S1	S2	Mat'l	Finish
1768199	L	10	M14X1.5	8	6.5	21	14	13	9	27	19	19	STL	ZND

NPTF Hex Pipe Caps — Parker HPC

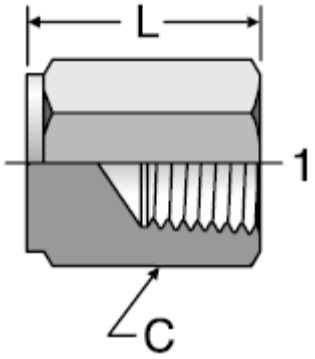

Part Number	Description	L	C	1	
	Cap, Hex Pipe 1/8	.75	9/16	1/8-27	
84569155	Cap, Hex Pipe 1/4	.91	3/4	1/4-18	
	Cap, Hex Pipe 3/8	1.03	7/8	3/8-18	
	Cap, Hex Pipe 1/2	1.34	1-1/16	1/2-14	
	Cap, Hex Pipe 3/4	1.44	1-1/4	3/4-14	
	Cap, Hex Pipe 1	1.68	1-5/8	1-11-1/2	
	Cap, Hex Pipe 1-1/2	1.92	2-3/8	1-1/2-1-1/2	

Conversion Adapter NPTF/BSPP

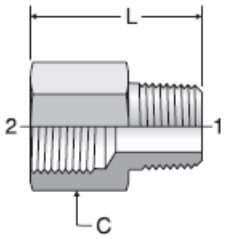

Part Number	Description	1 Male NPTF	2 Female BSPP	L	C	MAT	FIN
84595752	Adapter, 1/2-14 M NPTF/F BSPP	1/2-14	1/2-14	1.66	1-1/8	STL	ZND

Conversion
Adapter
NPTF/Metric

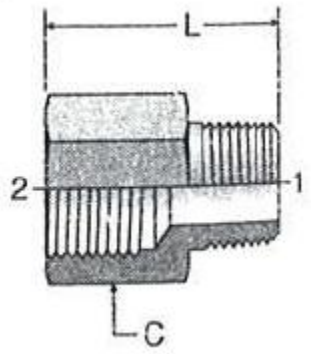

Part Number	Description	1 Male NPTF	2 Metric Straight Thread	L	C	MAT	FIN
51551025	Adapter, 1/8-27 NPTF X M12X1.5	1/8-27	M12X1.5	1.16	3/4	STL	ZND

Conversion Adapter
SAE-ORB/BSPP

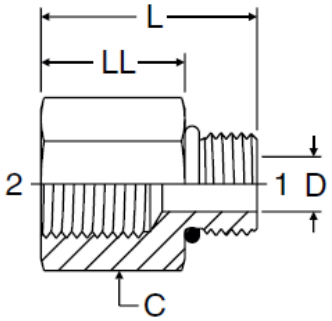

Part Number	1 UN/UNF-2A	2 BSPP	C HEX in.	L in.	LL in.	MAT	FIN
47479891	9/16-18	1/4-19	3/4	1.19	0.80	STL	ZND

Adapter
BSPP male with elastomer seal ISO 9974 port – female BSPP

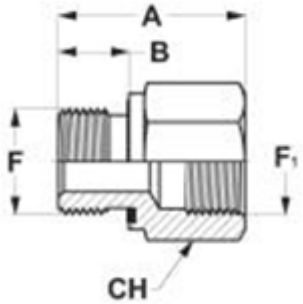

Part Number	F	F1	A	B	CH	MAT	FIN
47553404	1/2-14	1/4-19	24	14	27	STL	ZND
48137501	1/4-19	1/8-28	29	12	19	STL	ZND

Conversion Adapter
Male metric thread O-ring with retaining ring (ISO 9974 / DIN 3852-1) / Female inch ORB (SAE J1926-1 / ISO 11926-1)

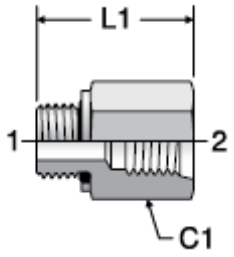

Part Number	1	2	L1 (in.)	C1 Hex (in.)	MAT	FIN
48133038	M18X1.5	3/4-16	1.38	1	STL	ZND
48133039	M33X2	1-5/16-12	1.91	1-5/8	STL	ZND

Parker F50F Male Pipe Adapter
SAE-ORB/NPTF

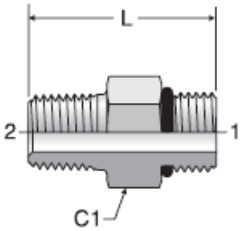

Part Number	Description	1	2	L	C1	MAT	FIN
84603131	Adapter, 9/16-18 ORB 3/8-18 M NPTF	9/16-18	3/8-18	1.34	11/16	STL	ZND
84603130	Adapter, 3/4-16 ORB 3/8-18 M NPTF	3/4-16	3/8-18	1.36	7/8	STL	ZND
47646702	Adapter, 3/4-16 ORB 1/2-14 M NPTF	3/4-16	1/2-14	1.53	7/8	STL	ZND
90479663	Adapter, 1-7/8-12 ORB 1-1/2-11-1/2 NPTF	1-7/8-12	1-1/2-11-1/2	2.25	2-1/8	STL	ZND

Female NPTF / Male NPTF
SAE 140239

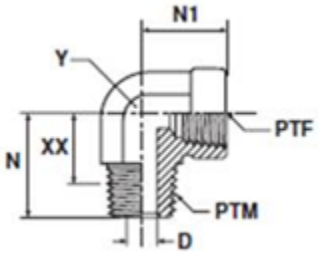

Part Number	NPTF FEMALE (PTF)	NPTF MALE (PTM)	D mm	N mm	N1 mm	XX mm	Y mm	MAT	FIN
51674042	3/8-18	3/8-18	10	31	26	22	22	STL	ZND

Elbow, 90 FOR 015/F/1934
Male NPTF X
ORB ISO 9974-2

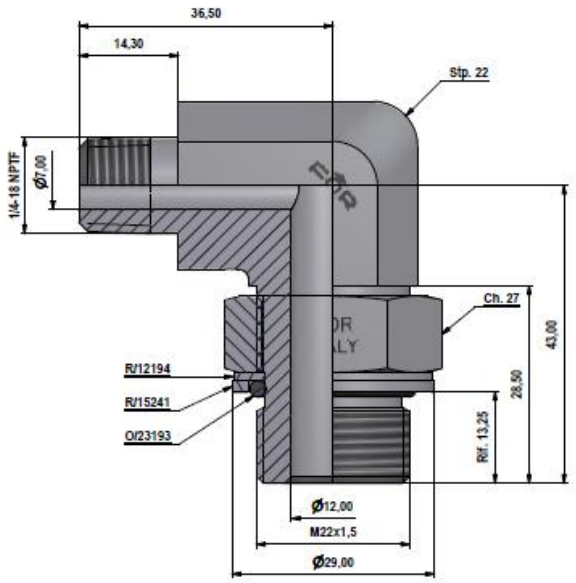

Part Number	Description					MAT	FIN
84595753	Elbow, 90 1/4-14 M NPTF M22X1.5 ORB					STL	ZND

Parker KOR

Tube End Reducer
EO Stand Pipe adjustable / EO 24 degree cone end.

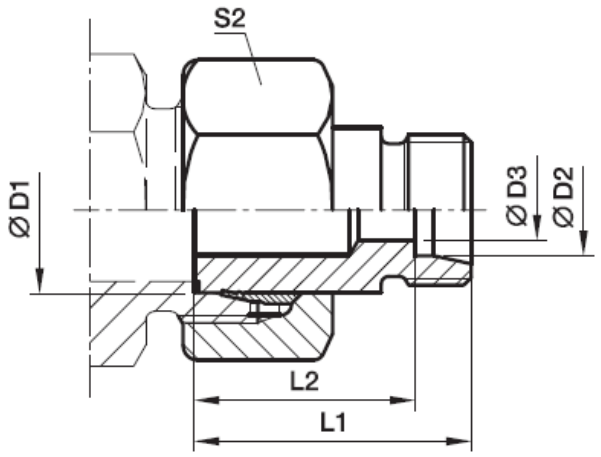

Part Number	Description	D1	D2	D3	L1	L2	S2	MAT	FIN
51400079	Tube End Reducer	15	08	6.0	30.5	23.5	27	STL	ZND

Parker RI-ED

Thread Reducer / Expander
Male BSPP thread – ED –seal (ISO 1179-2) / Female BSPP thread (ISO 1179-1)

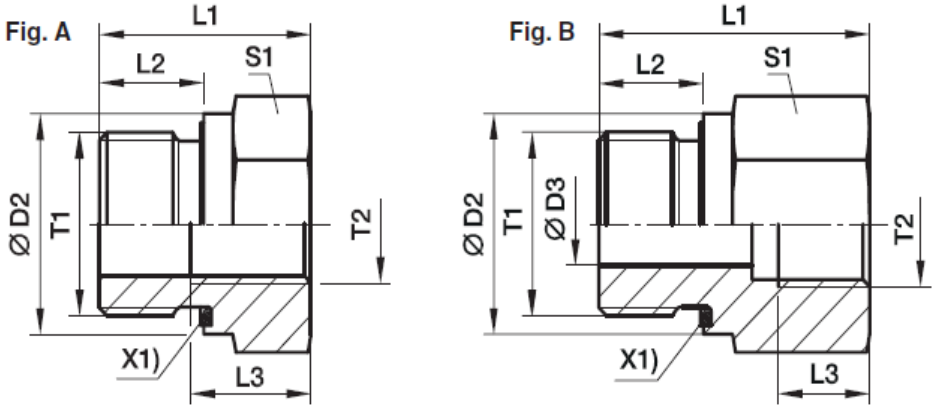

X1) Eolastic-sealing ED

Part Number	Male Stud T1	Female Stud T2	D2	D3	L1	L2	L3	S1	Fig.	MAT	FIN
51590384	G 1/4 A	G 3/8	19	5	36	12	12	24	B	STL	ZND
92037090	G 3/8 A	G 1/4	22	8	36	12	12.5	22	B	STL	ZND
51400988	G 1/2 A	G 1/4	27		24	14	12	27	A	STL	ZND
51580586	G 3/4 A	G 1/2	32	16	43	16	14	32	B	STL	ZND
47939105	G 1 A	G 1/2	40		29	18	14	41	A	STL	ZND
51580584	G 1 A	G 3/4	40	20	49	18	16	41	B	STL	ZND
92786560	G 1-1/4 A	G 1	50	25	52	20	18	50	B	STL	ZND
92786563	G 1-1/2 A	G 1	55		36	22	18	55	A	STL	ZND

Thread Reducer / Expander
Male BSPP / Female BSPP

DIN 3852-2

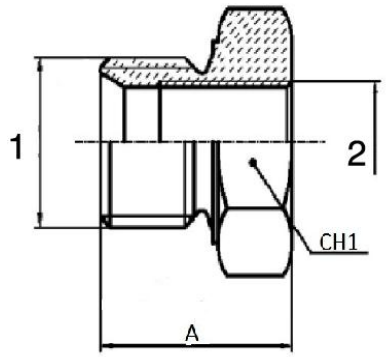

Part Number	1 Male BSPP	2 Female BSPP	A	CH1	MAT	FIN
51630062	3/4-14	3/8-19	26	32	STL	ZND

Parker FF33M Male Nipple

Male BSPT thread (ISO 7)

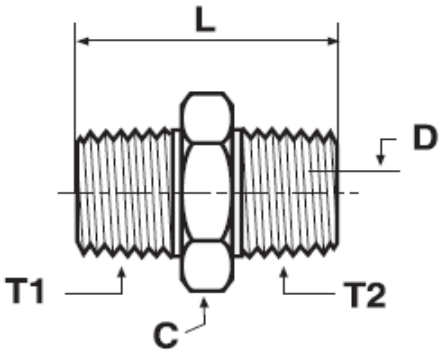

Part Number	Description	BSPT T1	BSPT T2	C mm	D mm	L mm	MAT	FIN
51400611	1/4FF33MS	1/4 -19	1/4-19	14	7	37	STL	ZND
51400607	1/2X1/4FF33MS	1/2-14	1/4-19	22	7	43	STL	ZND
51602222	1/2FF33MS	1/2-14	1/2-14	22	14	48	STL	ZND

37 Deg Flare End / Male BSPT thread (ISO 7)

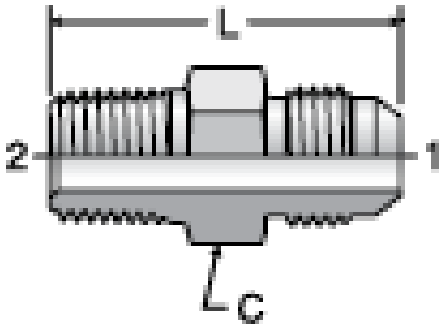

Part Number	Description	1 UN/UNF -2A	2 BSPT	L mm	C mm	MAT	FIN
92247799	9/16-18 37FL X 1/4-19 BSPT	9/16-18	1/4-19	36	16	STL	ZND

Parker SV Bulkhead Union

EO 24 Degree Cone end.

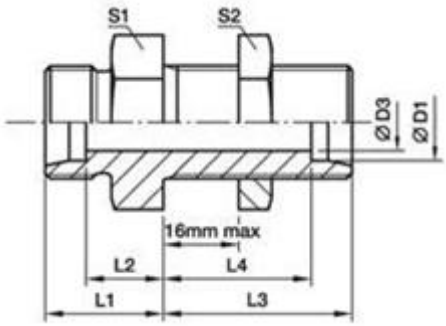

Part Number	D1	Thread	D3	L1	L2	L3	L4	S1	S2	Series	MAT	FIN
	(Both Sides)											
85826479	08	M14x1.5	6	15	8	34	27.0	19	19	L	STL	ZND
2142470	12	M18x1.5	10	17	10	36	29.0	24	24	L	STL	ZND
2247784	15	M22X1.5	12	19	12	38	31	27	30	L	STL	ZND
48126925	18	M26x1.5	15	21	13.5	40	32.5	32	36	L	STL	ZND
51543142	28	M36X2	24	26	18.5	43	35.5	41	46	L	STL	ZND

Parker WSV Bulkhead elbow

EO 24 Degree Cone end.

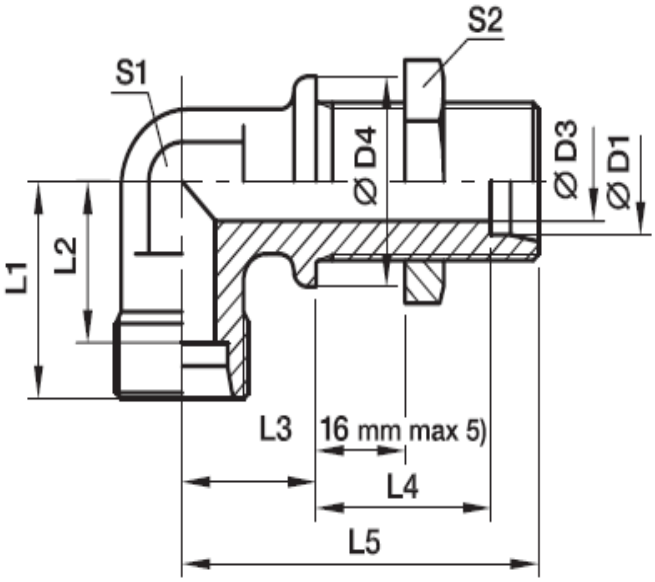

Part Number	D1	Threads	D3	D4	L1	L2	L3	L4	L5	S1	S2	Series	MAT	FIN
51400455	08	M14x1.5	6	19	21	14	17	27	51	12	19	L	STL	ZND
2930214	10	M16x1.5	8	22	22	15	18	28	53	14	22	L	STL	ZND
2247840	12	M18X1.5	10	24	24	17	20	29	56	17	24	L	STL	ZND
85806613	16	M24x1.5	12	30	33	24.5	24	31.5	64	24	32	S	STL	ZND
51419867	18	M26x1.5	15	32	31	23.5	24	32.5	64	24	36	L	STL	ZND

Parker W Union elbow

EO Elbow, 90, 24 Degree Cone end.

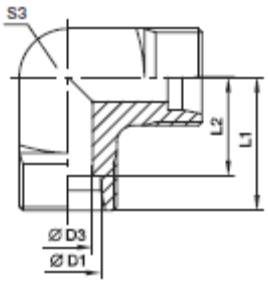

Part Number	D1	Threads	D3	L1	L2	S3	Series	MAT	FIN
51400202	08	M14x1.5	6	21	14	14	L	STL	ZND
87681454	10	M16x1.5	8	22	15	17	L	STL	ZND
47466755	12	M18x1.5	10	24	17	19	L	STL	ZND
47781352	15	M22x1.5	12	28	21	19	L	STL	ZND
85811755	16	M24x1.5	12	33	24.5	24	S	STL	ZND

Parker EVW Standpipe elbow

EO Elbow, 90, Adjustable 24 Degree Cone end / EO Stand pipe adjustable

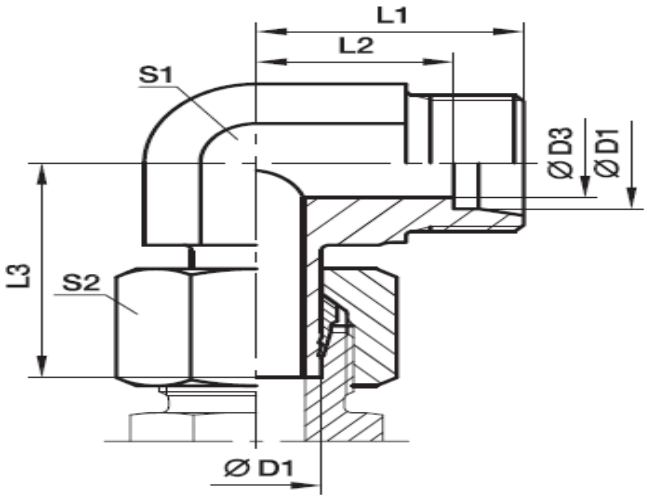

Part Number	D1	D3	L1	L2	L3	S1	S2	Series	MAT	FIN
87736519	08	6	21	14	27.5	12	17	L	STL	ZND
51401001	12	10	24	17	29.5	17	22	L	STL	ZND
51400941	15	12	28	21	32.5	19	27	L	STL	ZND

Parker WE-R (KEG) Male stud elbow

EO 24 Degree Cone end / Male Short BSP taper thread (DIN 3852-2 type C)

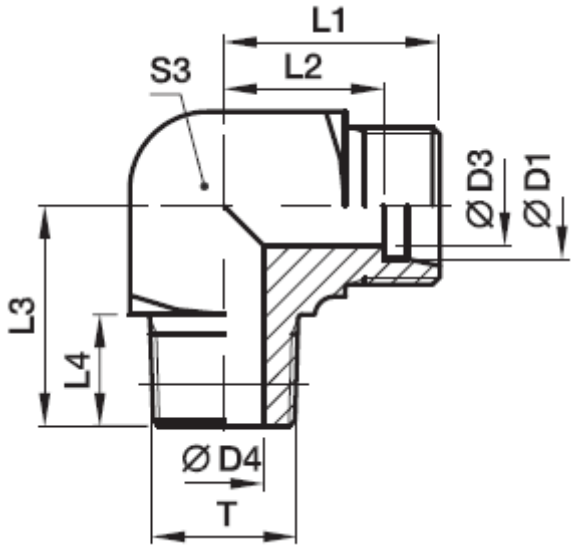

Part Number	D1	T	D3	D4	L1	L2	L3	L4	S3	Series	MAT	FIN
51400989	08	R 1/4 tap.	6	6	21	14	26	12	14	L	STL	ZND
51400911	08	R 3/8 tap.	6	9	24	17	28	12	19	L	STL	ZND

Parker GE-R (KEG) Male Stud Connector

EO 24 Degree Cone end / Male Short BSP taper thread (DIN 3852-2 type C)

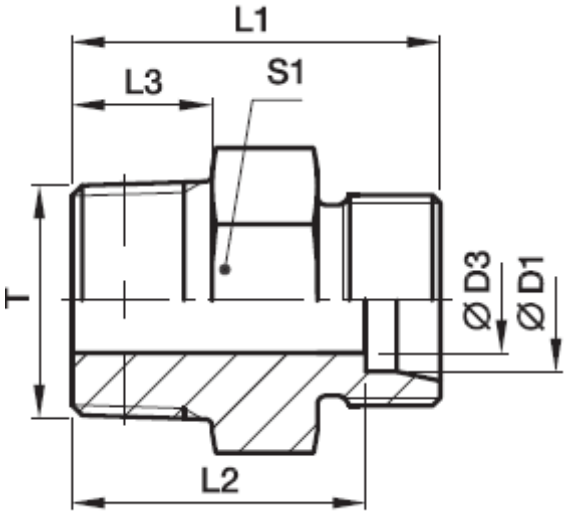

Part Number	D1	T	D3	L1	L2	L3	L4	S1	Series	MAT	FIN
47422575	08	R1/8keg	4.0	23	16	8	31	17	L	STL	ZND

Parker RHD Non-Return Valve

24 Degree Flareless / 24 degree Flareless

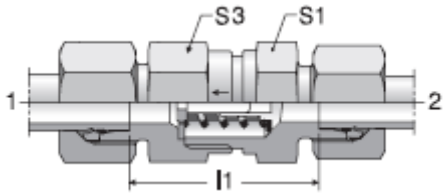

Part Number	1 & 2 (mm)	DN Size	L1	S1	S3	Series	MAT	FIN
47422574	8	6	30	19	19	L	STL	ZND

Tube Nut

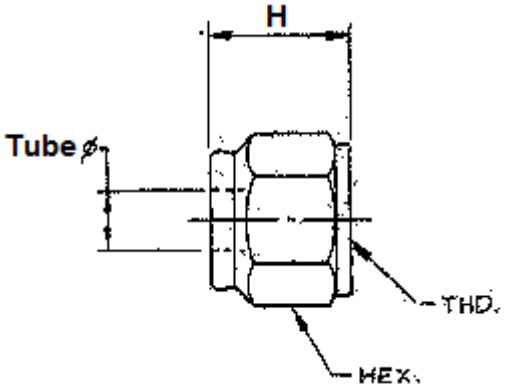

Part Number	Tube OD (in)	Thread	H (in)	Hex (in)	MAT	FIN
83934417	5/8	15/16-16	1.0	1-1/8	STL	ZND

Sleeve.

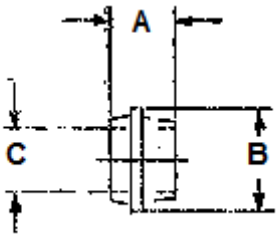

Part Number	Tube OD (in)	A	B	C	MAT	FIN
83934416	5/8	31/64	55/64	5/8	STL	PHC

ISO 8745 – Grooved Pins – Half length taper grooved.

Hardness 125 HV30 to 245 HV30

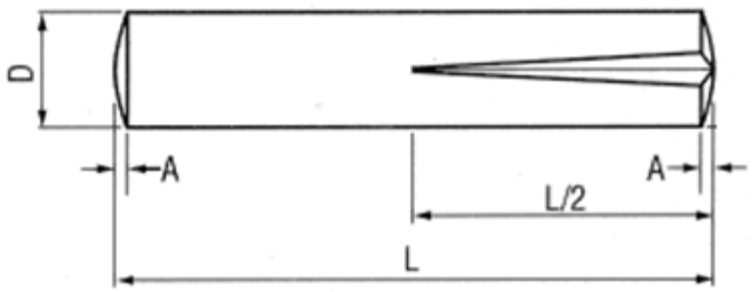

Part Number	D	L	A	MAT	FIN
47692629	5	24	0.63	STL	ZND

DIN 1472 – Grooved Pins – Half length taper grooved.

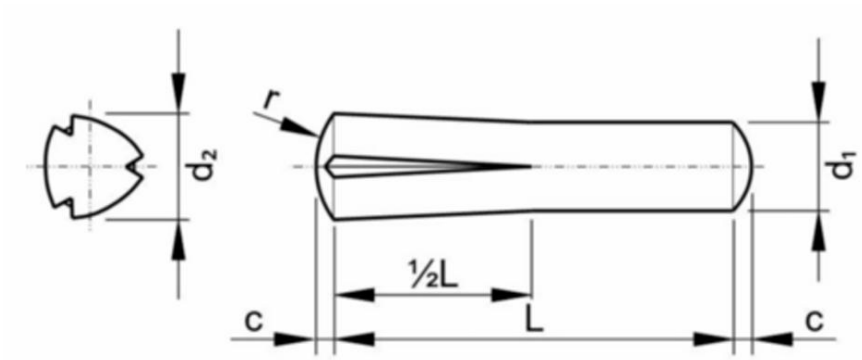

Part Number	d_1	d_2	L	c	r	MAT	FIN
92326879	6	6.3	16	0.8	6	STL	ZND

Soft Sealing Ring for 24 Degree Fittings
Parker DOZ EO-2

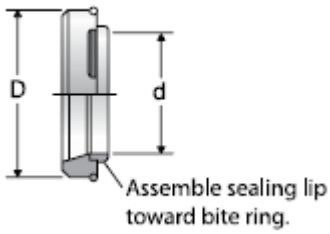

Part Number	D (mm)	D (mm)	Tube OD (mm)	Series	Material
47698735	20.3	15	15	L	STL/NBR-90
47698741	24.3	18	18	L	STL/NBR-90
47698742	27.7	22	22	L	STL/NBR-90

Circlip

Hardened or tempered to HV 410 – 500 or austempered to HV 480 - 570.

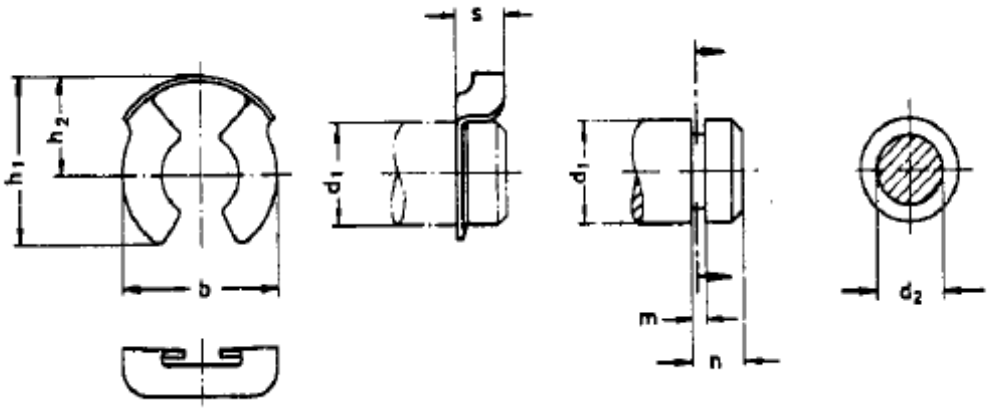

Part Number	Size	b	h1	h2	s	d1 from – to	d2 min – max	m min – max	n min	Mat	Finish
51535749	10	16	15.7	9.5	5	10 – 12	7.8 – 8.2	0.95 – 1.15	4.4	HTS	ZND
83982632	24	35	34	20	9	24 – 30	16 – 18	1.70 – 1.90	7.8	HTS	ZND

Elbow – Male-Female BSPP-BSPT

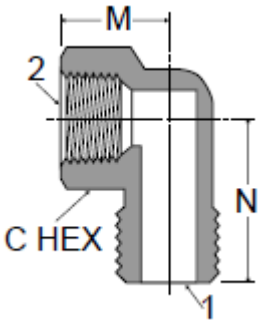

Part Number	BSPT 1	BSPP 2	C mm	M mm	N mm	MAT	FIN
920018473	1/8	1/8	14	22.5	23	Brass	PLN
920018471	3/8	3/8	22	31.5	30	Brass	PLN

Blanking plug with nut for cone
EO 24Deg DKO swivel

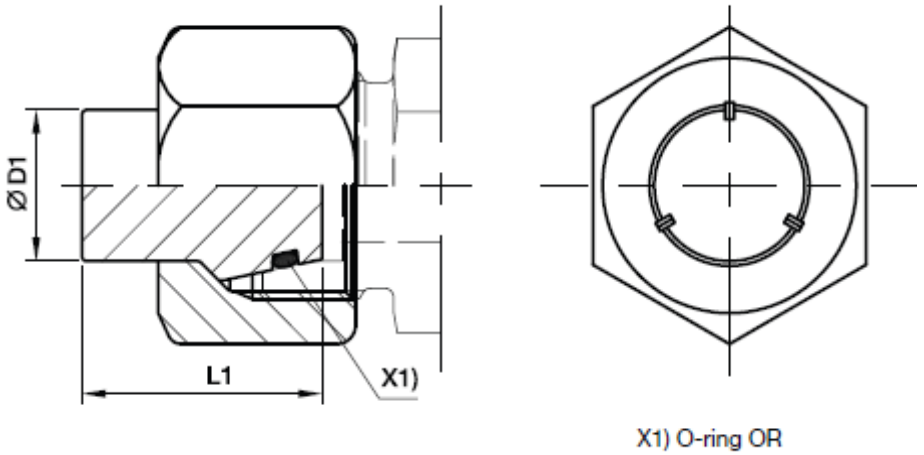

Part Number	Series	Threads	D1	L1	MAT	FIN
1148454	S	M20X1.5	12	20.5	STL	ZND
2268319	L	M36X2.0	28	26.5	STL	ZND

Blanking plug for tube ends
EO 24Deg cone end

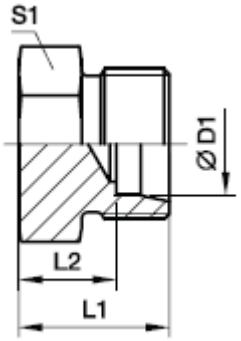

Part Number	Series	Threads	D1	L1	L2	S1	MAT	FIN
2507899	S	M20X1.5	12	22	14.5	22	STL	ZND