LVU14298	VERSION LV40	SH 1/1	REV B

SYM	REVISION	DECISION	DATE	APPROVED
A	ADOPT	5705LV	24MAY02	CTM/DHJ
B	ADDED TOLERANCE	6444LV	22OCT02	CTM/TNB

TRINITY™ SUPPLY CHAIN SOLUTIONS

Qty: 500,000
MAR 8, 2018
TLC #2028036

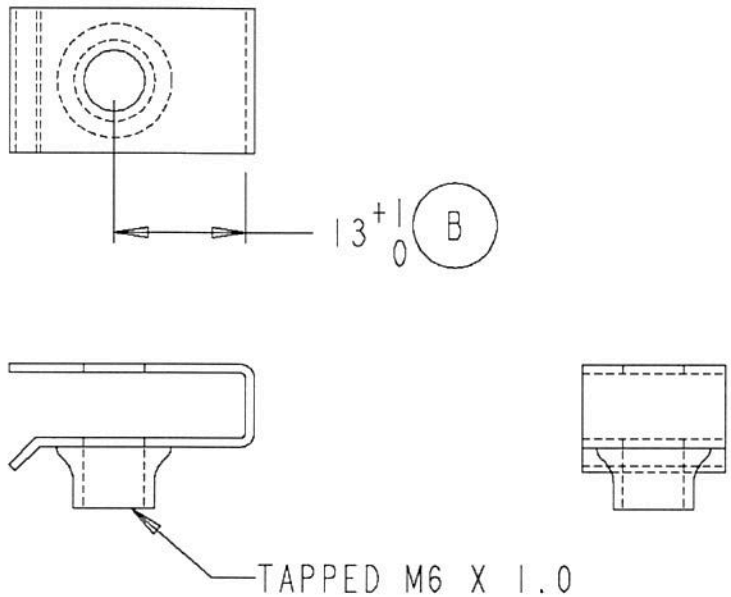

SAME AS P/# 16842 MFG. BY
AU-VE-CO, COLD SPRING, KY

DRAWING REV	B.2	MODEL REV	B.0

THE DIAMOND SHAPED SYMBOL (◇) IS A MAJOR CLASSIFICATION OF CHARACTERISTICS SYMBOL PER HOR10026

MATL

THIS DRAWING AND THE INFORMATION HEREON ARE OUR PROPERTY AND MAY BE USED BY OTHERS ONLY AS AUTHORIZED BY US. UNPUBLISHED-ALL RIGHTS RESERVED UNDER THE COPYRIGHT LAWS ©

REFERENCES: JDS-G113 DRAFTING

DWN	CTM 16MAY2002
CHK	
ENGR	CTM 16MAY2002
CHK	
APVD	
C/C	

SIMILAR PART

PROJECT NO.

DESIGN CONTROL: LV

TERM. CODE: 5248 01

DEERE & COMPANY
MOLINE, ILLINOIS 61265

NUT
6MM CLAMP ON
PANEL RANGE 3.5-6.5MM

SIZE	FSCM NO.		VERSION	REV
A		LVU14298	LV40	B
SCALE 3:2		METRIC	SHEET 1/1	

Pro/Engineer