Manufacturer PDF Provided by www.southeasternequipment.net

Minuteman®
Excellence Meets Clean

E17/E20/H20 Floor Scrubber Disc Brush Drive

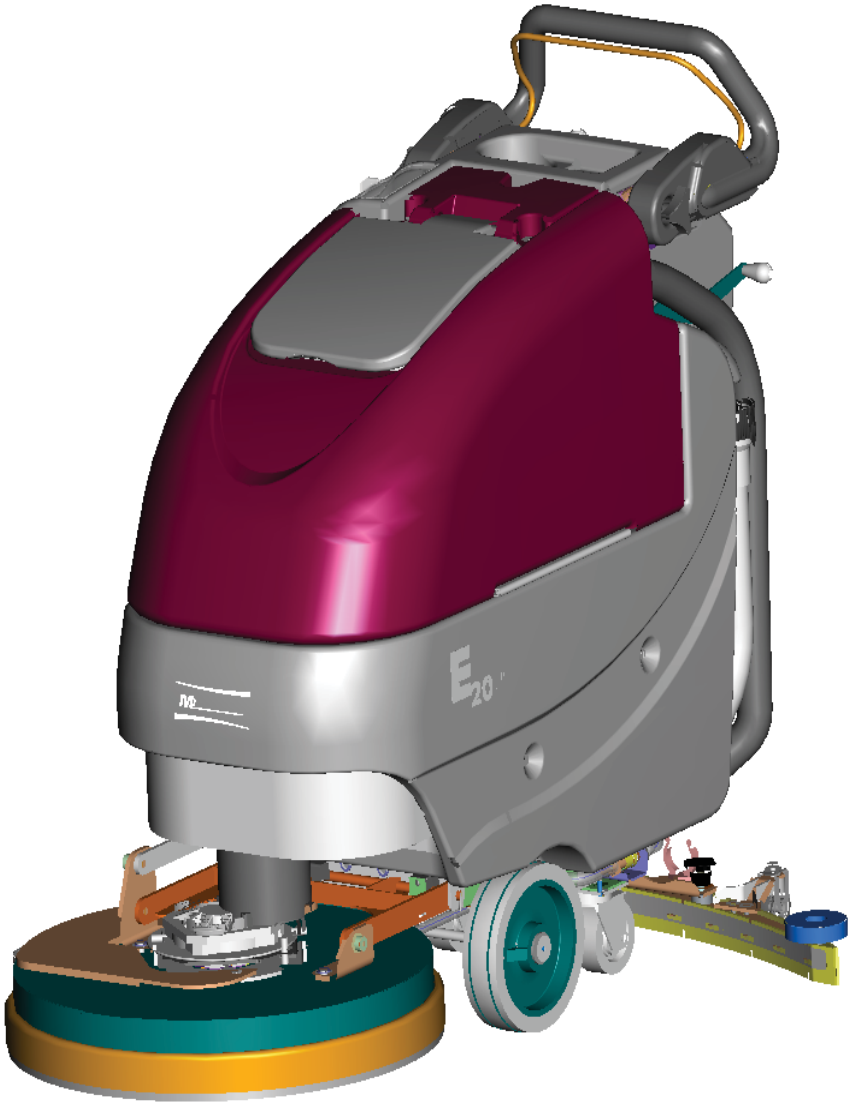

Minuteman International, Inc.
A Member of the Hako Group

988720 Rev P 07/20

Manufacturer PDF Provided by www.southeasternequipment.net

PREFACE

Thank you for your purchase of the new industry standard for scrubbers. Minuteman International takes great pride in offering the most dependable, reliable and best value in industrial power sweepers and sweeper / scrubbers. We set the standard.

Our Customer Service Department would like to hear from you. If you see any errors, omissions or something that needs clarification in this Parts Catalog please let us know. We are working hard towards continually improving our processes to bring you the best you deserve. Please copy the form below, fill out and comment on how you found our catalog.

Thank you!
The Minuteman International Team

Name: _____

Title: _____

Company Name: _____

Address: _____

Country: _____

Type of equipment or model number: _____

Comments: _____

_____

_____

_____

Please return to:

Customer Service Manager
Minuteman International, Inc.
14N845 U.S. Route 20
Pingree Grove, Illinois 60140 USA

Phone: (800) 323-9420
Email: tech@minutemanintl.com

Manufacturer PDF Provided by www.southeasternequipment.net

Technical Specifications

Model ***E17 / E20 / H20***

All Models Beginning with: E17BD / E20BD / H20BD

	E17BD	E20BD / H20BD
Current (Max)	32 amps	32 amps
Sound Level	69 dBA	69 dBA / 65.5 dBA
Cleaning path width	17 in (43 cm)	20 in (51 cm)
Squeegee width	30 in (76 cm)	34 in (86 cm)
Theoretical productivity	17,000 ft^2/hr (1,579 m^2)	20,000 ft^2/hr (1,858 m^2)
Working speed	2.3 mph (3.7 km per hr)	2.3 mph (3.7 km per hr)
Rated voltage	24 volts	24 volts
Vacuum flow	65 cfm (110 m^3/hr)	65 cfm (110 m3/hr)
Vacuum waterlift	45 inches (112mbar)	45 inches (112mbar) / 46 INCHES (115mbar)
Vacuum power	.60 HP (450 W)	.60 HP (450 W)
Brush type	Disc	Disc
Brush motor(s) power	3/4 HP (560W)	3/4 HP (560W)
Number of brushes	1	1
Brush RPM	180 RPM	180 RPM
Aqua-Stop equipped	Available	Available
Solution capacity	12Gal (45 liters)	12 Gal (45 liters)
Recovery capacity	13 Gal (49 liters)	13 Gal (49 liters)
Working Grade	2%	2%
Weight with batteries	306 lbs (139 kg)	313 lbs (142 kg)
Weight without batteries	196 lbs (89 kg)	203lbs (92 kg)
Dimensions (LxWxH)	44.4 x 18.8 x 42.3 (112.8 x 47.8 x 107.4 cm)	47.4 x 21.3 x 42.3 (120.4 x 54.1 107.4 cm)

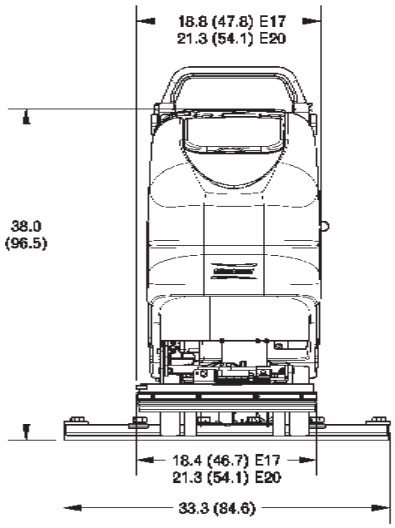

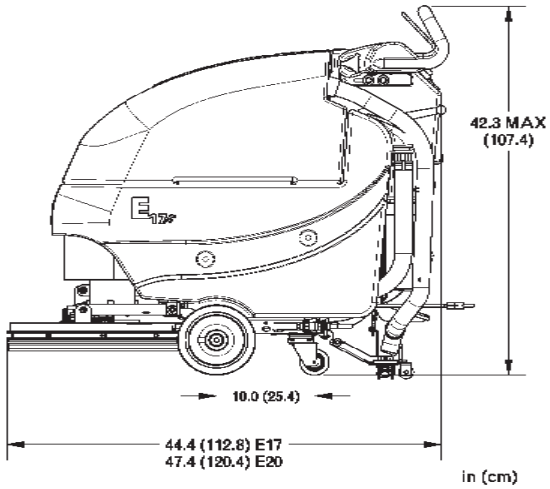

Manufacturer PDF Provided by www.southeasternequipment.net

CE

DECLARATION OF CONFORMITY

MANUFACTURER'S NAME: **Minuteman International Inc.**

MANUFACTURER'S ADDRESS: **111 South Rohlwing Road**
Addison, IL. 60101

EQUIPMENT DESCRIPTION: **E17/ E20 Walk-Behind Scrubber**

EQUIPMENT MODEL DESIGNATION: **E17BDQPCE, E17BDQPGCE, E17BDCE, E20BDCE, E20BDQPCE, E20BDQPGCE**

Application of Council Directives: 98/37/EC, 89/336/EEC

Harmonized standards complied with: EN 60335-2-72, EN 60335-1, EN 61000-6-2, EN 61000-6-3

I, the undersigned, hereby declare that the equipment specified above conforms to the above Directive(s) and Standard(s).

SIGNATURE: _____ **DATE:** 9.11.2007

PRINTED NAME: **Ruediger Schroeder**
TITLE: **Exec. VP and COO**

Form: ECO 200 *

Manufacturer PDF Provided by www.southeasternequipment.net

Brush Options

BRUSH OPTIONS - E17			
		AQUA STOP BRUSHES	
762394	PAD RETAINER, FIXED	7943-01	BRUSH, 17” LIGHT-MEDIUM PP.5 A/S, (WHITE)
762370	PAD RETAINER, REMOVEABLE	7943-02	BRUSH, 17” LIGHT-MEDIUM A/S K901 (BLACK)
172517-1	BRUSH-DISC, 17” NYLON, BLACK	7943-03	BRUSH, 17” MEDIUM NYLON 600GR. A/S, (GREY)
172517-3	BRUSH-DISC, 17” NYLO-GRIT 80GR GREEN	7943-04	BRUSH, 17” MEDIUM-HEAVY PP.8 A/S (WHITE)
172517-6	BRUSH-DISC 17”SCRUB GRIT II 120GR	7943-05	BRUSH, 17” HEAVY NYLON 180GR. A/S (GRAY)
		7943-06	BRUSH, 17” HEAVY-2 NYL 120GR. A/S, GREEN

BRUSH OPTIONS - E20/H20			
		AQUA STOP BRUSHES	
762394	PAD RETAINER, FIXED	7951-01	BRUSH, 20” LIGHT-MED PP.5 A/S, WHITE
762370	PAD RETAINER, REMOVEABLE	7951-02	BRUSH, 20” LIGHT-MEDIUM A/S, K901, BLACK
172520-1	BRUSH, 20" NYLON	7951-03	BRUSH, 20” MEDIUM NYLON 600GR. A/S, GREY
172520-3	BRUSH-DISC, 20" NYLO-GRIT 80GR, GREEN	7951-04	BRUSH, 20” MEDIUM-HEAVY PP.8 A/S, WHITE
172520-6	DISC BRUSH 20", SCRUB GRIT 2, 120GR RED	7951-05	BRUSH, 20” HEAVY NYLON 180GR. A/S, GREY
		7951-06	BRUSH, 20” HEAVY-2 NYL 120GR. A/S, GREEN

Note: Models with the black tri-lobe brush hub will require the conversion kit part number K-E1720HUB before using the brushes listed above

Batteries, Chargers and Cords

BATTERIES, CHARGERS & CORDS			
MODEL	BATTERY	CHARGER	CORD
E17BDQPGCE, E20BDQPGCE	956157	957939	748680CE
E17BDQPG, E20BDQPG	956157	957939	
E17BDQPCE, E20BDQPCE	956716	957939	748680CE
E17BDQP, E20BDQP	957916	957939	
E17BDCE-SA, E20BDCE-SA	***	957939	742481
E17BDCE, E17BDCEUK, E20BDCE, E20BDCEUK	***	957939	748680CE
E17BD, E20BD	***	957939	

Manufacturer PDF Provided by www.southeasternequipment.net

Table of Contents

Technical Specifications 3
Brush Options 5
Batteries, Chargers and Cords 5
E17 Main Assembly 8
E20/H20 Main Assembly 10
Brush Drive Base Assembly 12
E17/20/H20 Base Assembly 14
Chassis Assembly 16
Recovery Tank Assembly 18
Solution Tank Assembly 20
Lift Pedal Stop Assembly 21
Battery Tray Assembly 22
Old Style - Solution Valve Assembly 23
New Style - Solution Valve Assembly 23
Solution Control Handle Assembly 24
Solution Control Handle Assembly BOM 25
Handle Assembly 26
Electrical Box Assembly 28
Electrical Panel Assembly 30
Electrical Panel Assembly BOM 31
Vacuum Switch Assembly 32
Electrical Box Cover Assembly 34
Vac Motor Assembly 36
17” Brush Deck Assembly 38
20” Brush Deck Assembly 40
E17/20/H20 Brush Hub Assembly 42
E17 Rear Squeegee Assembly (Straight) 43
E17 Rear Squeegee Assembly (Curved) 44
E20/H20 Rear Squeegee Assembly (Curved) 46
E17 Tension Band Sub-Assembly 48
E20/H20 Tension Band Sub-Assembly 49
E17/E20/H20 Squeegee Mechanism Assembly 50
Kit K-E1720S - Water Solenoid Valve 52
Wiring Diagrams 54
Warranty 58

Manufacturer PDF Provided by www.southeasternequipment.net

Manufacturer PDF Provided by www.southeasternequipment.net

E17 Main Assembly

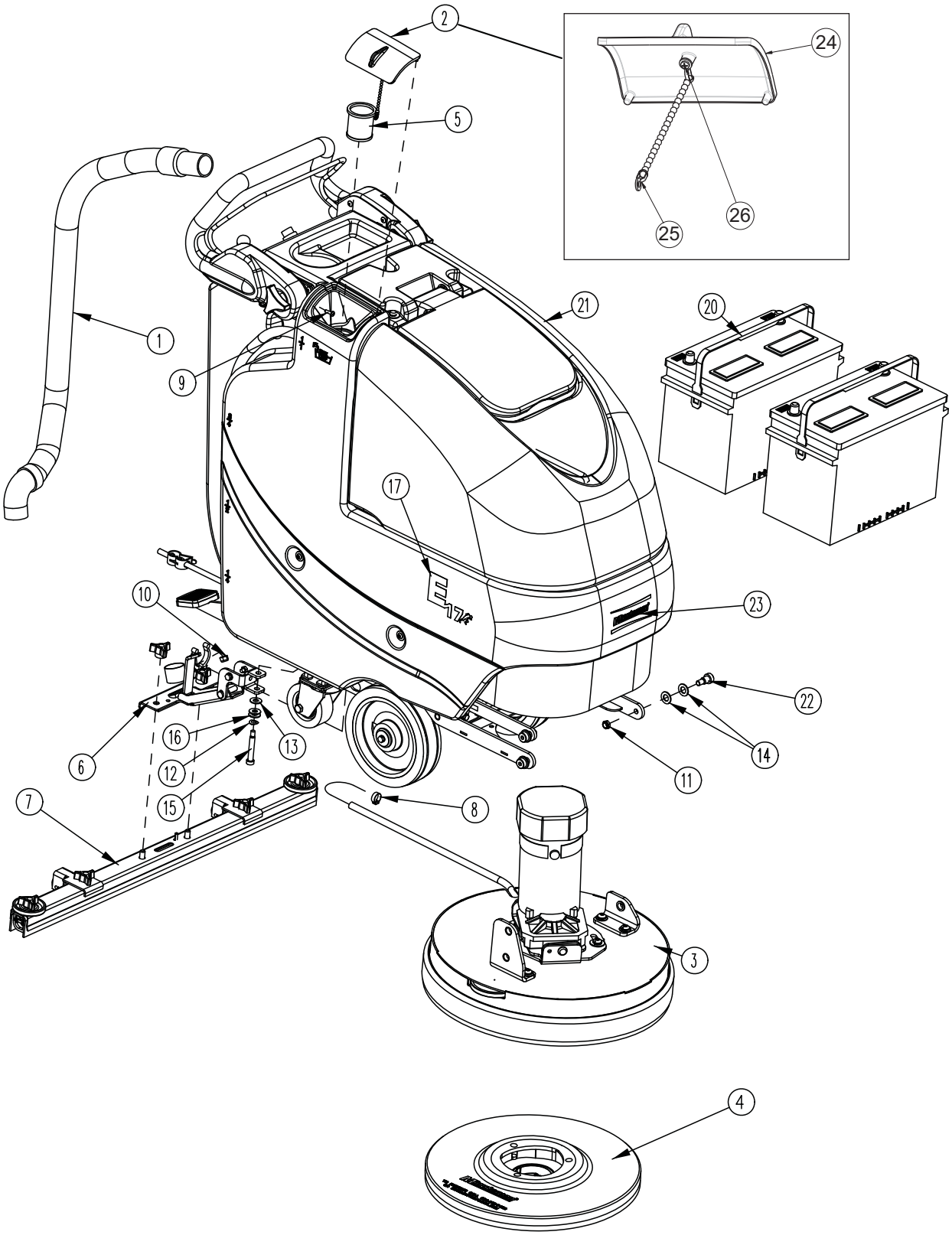

Manufacturer PDF Provided by www.southeasternequipment.net

E17 Main Assembly BOM

ITEM	PART NO.	QTY	DESCRIPTION
1	172010	1	HOSE, CLEAR VAC W/ 45 CUFF
2	172018	1	SOLUTION TANK LID ASSY
3	172090	1	BRUSH DECK ASSY 17"
4	172517-2	1	17" PAD DRIVER - **SEE BELOW FOR RETAINER**
5	172159	1	FILTER, FILL PORT, ES1720
6	172170	1	BD SQUEEGEE LIFT MECH ASSY
6KT	172150	1	SQUEEGEE LIFT MECH ASSY
7	210080	1	SQUEEGE ASY COMP 20" STR
7KT	172530-1	1	SQUEEGEE ASSY BD 30" (760)
8	450076	1	CLAMP-CRIMP 185R SS
9	711118	1	SCR-ST-A 10 X .75 SS
10	711374	1	NUT-NYLOC 5/16-18
11	711375	3	NUT-NYLOC 3/8-16 X 1/2 NUT
12	711523	1	WSR-WAVE .37X .68 X .08
13	711569	1	WSR-FLT .390 X .880 X .062 NYL
14	711592	6	WSR-FLAT .506 X .9 X .064 NYL
15	712143	1	BLT-SHLD 3/8 X 2.0, 5/16-18
16	712301	2	WSR-FLAT .37 X .87 X .06
17	715917	2	DECAL, E17
18	740164-1	1	JUMPER CABLE ASSY, RED 4G 12"
19	747649	1	CABLE ASSY, BATT ERY E17
20	956712	2	BATTERY, 12V 115AH
20G	956100	2	GEL BATTERY 12V 100AH
20T	956754	2	BATTERY 12V 105AH WET TROJAN
21	172001BD-120	1	BRUSH DRVMAIN ASSY-120V CHARGER
21CE	172001BD-230	1	BRUSH DRVMAIN ASSY-230V CHARGER
22	712099PLT	3	BLT- SHLDR 1/2 X 1/2 ZINC PLT
23	715914W	1	DECAL, MINUTEMAN W/SWOOSHES, WHITE
24	172008	1	SOLUTION TANK LID
25	172123	1	CHAIN, BEADED SS W/EYELET S
26	712145	1	SCR-MC 6-32 X .37 PPH SS

Manufacturer PDF Provided by www.southeasternequipment.net

E20/H20 Main Assembly

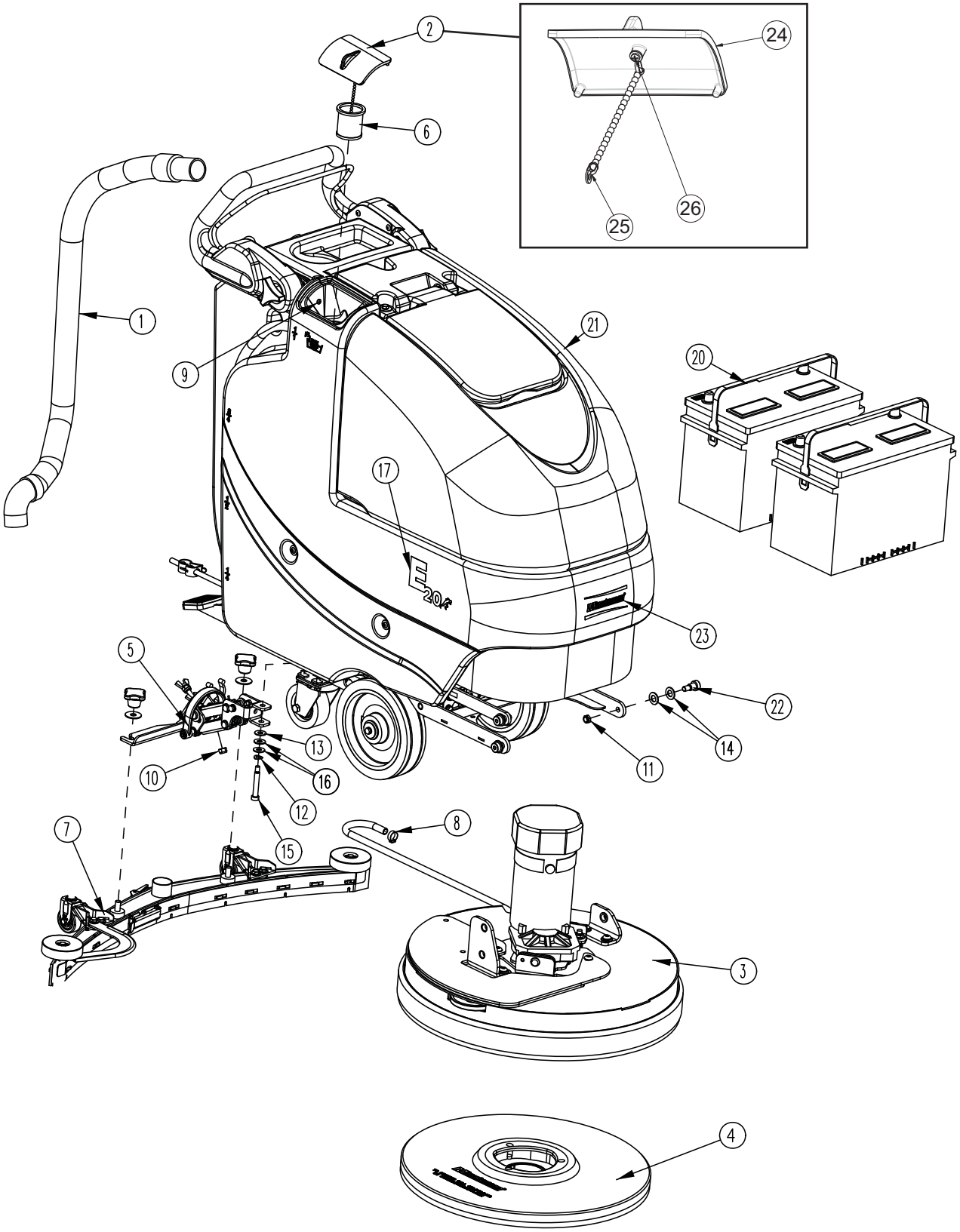

Manufacturer PDF Provided by www.southeasternequipment.net

E20/H20 Main Assembly BOM

ITEM	PART NO.	QTY	DESCRIPTION
1	172010	1	HOSE, CLEAR VAC W/ 45 CUFF, E20
	172340		HOSE, PU RECOVERY, CLEAR, H20
2	172018	1	SOLUTION TANK LID ASSY
3	172100	1	BRUSH DECK ASSY 20"
4	172520-2	1	20" PAD DRIVER - 230V-SEE BELOW FOR RETAINER
5	172150	1	SQUEEGEE LIFT MECH ASSY
6	172159	1	FILTER, FILL PORT, ES1720
7	172534-1	1	SQUEEGEE, 34" (860)
8	450076	1	CLAMP-CRIMP 185R SS
9	711118	1	SCR-ST-A 10 X .75 SS
10	711374	1	NUT-NYLOC 5/16-18
11	711375	3	NUT-NYLOC 3/8-16 X 1/2 NUT
12	711523	1	WSR-WAVE .37X .68 X .08
13	711569	1	WSR-FLT .390 X .880 X .062 NYL
14	711592	6	WSR-FLAT .506 X .9 X .064 NYL
15	712143	1	BLT-SHLD 3/8 X 2.0, 5/16-18
16	712301	2	WSR-FLAT .37 X .87 X .06
17	715920	2	DECAL, E20
	715684		DECAL, H20
18	740164-1	1	JUMPER CABLE ASSY, RED 4G 12"
19	747649	1	CABLE ASSY, BATTERY E17
20		2	BATTERY, SEE PAGE 5
21	172001BD-120	1	BRUSH DRV MAIN ASSY-120VCHARGER
21CE	172001BD-230	1	BRUSH DRV MAIN ASSY-230VCHARGER
22	712099PLT	3	BLT- SHLDR 1/2 X 1/2 ZINC PLT
23	715914W	1	DECAL, MINUTEMAN W/SWOOSHES, WHITE
24	172008	1	SOLUTION TANK LID
25	172123	1	CHAIN, BEADED SS W/EYELETS
26	712145	1	SCR-MC 6-32 X .37 PPH SS

Manufacturer PDF Provided by www.southeasternequipment.net

Brush Drive Base Assembly

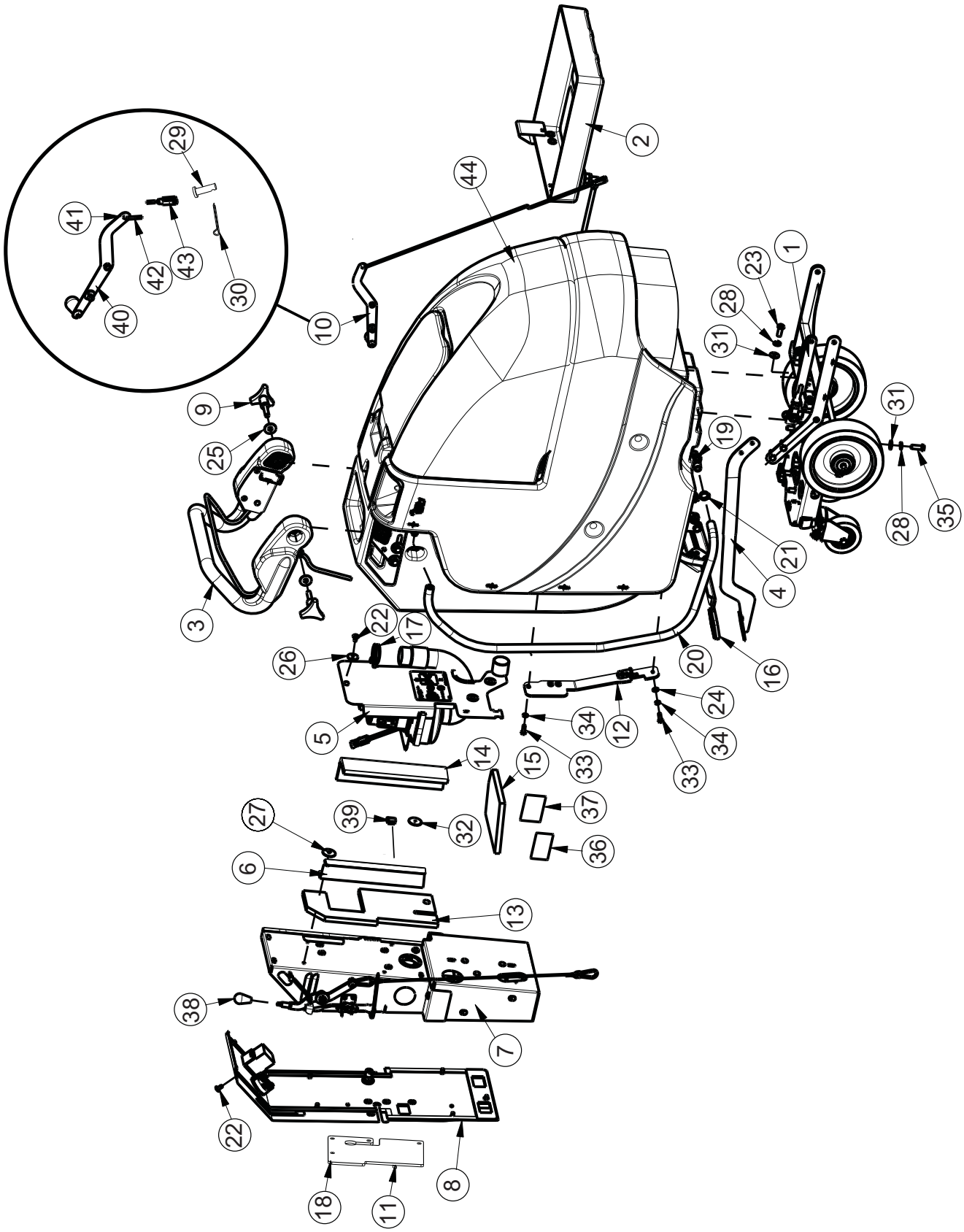

Manufacturer PDF Provided by www.southeasternequipment.net

Brush Drive Base Assembly BOM

BILL OF MATERIAL - 172001BD - 120/230							
ITEM	PART NO	QTY	DESCRIPTION	ITEM	PART NO	QTY	DESCRIPTION
1	172002	1	E1720 BD CHASSIS ASSY	23	710985	2	SCR-BHSCS 3/8-16 X .625 ZP
2	172012	1	BATTERY TRAY ASSY, ES1720	24	711504	1	WASHER-FLAT 1/4 SS
3	172016	1	BD HANDLE ASSY, E1720	25	711507	2	WASHER-FLAT 3/8 X 1.12 X .06
4	172032	1	LIFT PEDAL WMT	26	711519	3	WASHER-FLAT 1/4 X 1.00 X .06 ZP
5	172050	1	VAC MOTOR ASSY	27	711543	2	WASHER-LOCK #10 SPLIT ZP
6	172055	1	BKT, VAC AREA INSIDE COVER	28	711546	6	WASHER-LOCK 3/8 SPLIT ZP
7	172070-120	1	ELEC BOXBD ASSY 120V	29	711803	1	PIN-COTTER .06 X .75
7CE	172070-230		ELEC BOXBD ASSY 230V	30	712117	1	PIN-CLEVIS 3/16 X .593
8	172073	1	BD ELEC BOXCOVER ASSY	31	712301	8	WASHER-FLAT 3/8 X .87 X .06 ZP
9	172085	2	KNOB, 3/8-16 STUD, 3LOBE	32	712312	2	WASHER-BALANCING .187 X 1.25
10	172112	1	SOL CONTROL ASSY	33	712562	2	SCR-HH 1/4-20 X .75, 18-8 SS
11	172129	1	BKT, PWR CORD MOUNT, 5/8 HOLE	34	712758	2	WASHER-LOCK 1/4 SPLIT SS
12	172157	1	LIFT PEDAL STOP ASSY	35	713042	4	SCR-HH 3/8-16 X 1.00 ZP GR 5
13	172184	1	FOAM COVER W/ ADHESIVE	36	715029	1	DECAL-NAME PLATE MODEL ID
14	172185	1	FOAM COVER REAR 2, 1/2" THICK	37	715047	1	DECAL-CLEAR LAMINATE 2X3
15	172187	1	FOAM COVER FRONT 2, 1/2" THICK	38	760592	1	KNOB-OVAL TAPERED
16	210142	1	PEDAL PAD	39	809443	1	CLIP-WIRE & CORD
17	3303255	1	CLAMP-HOSE 1.75 DIA NOMI-NAL	40	172115	1	SOLUTION CTRL LEVER ASSY
18	293080	1	STRAIN RELIEF	41	172122	1	NUT, PUSH-ON WSR CAP, 3/16
19	342440	1	FTG-TEE 3/4 MPT X 1/2 HB NYLON	42	172069	1	SOLUTION CONTROL ROD
20	430156	1	HOSE, CLEAR 1/2 ID X 39.75"	43	172062	1	YOKE, 3/16 CLEVIS X 10-32 THD
21	450093	1	CLAMP-CRIMP 3/4" OD STEP-LESS	44	172001BASE	1	E1720 BASE ASSY
22	710178	10	SCR-THMS 1/4-20 X .50 ZP				

Manufacturer PDF Provided by www.southeasternequipment.net

E17/20/H20 Base Assembly

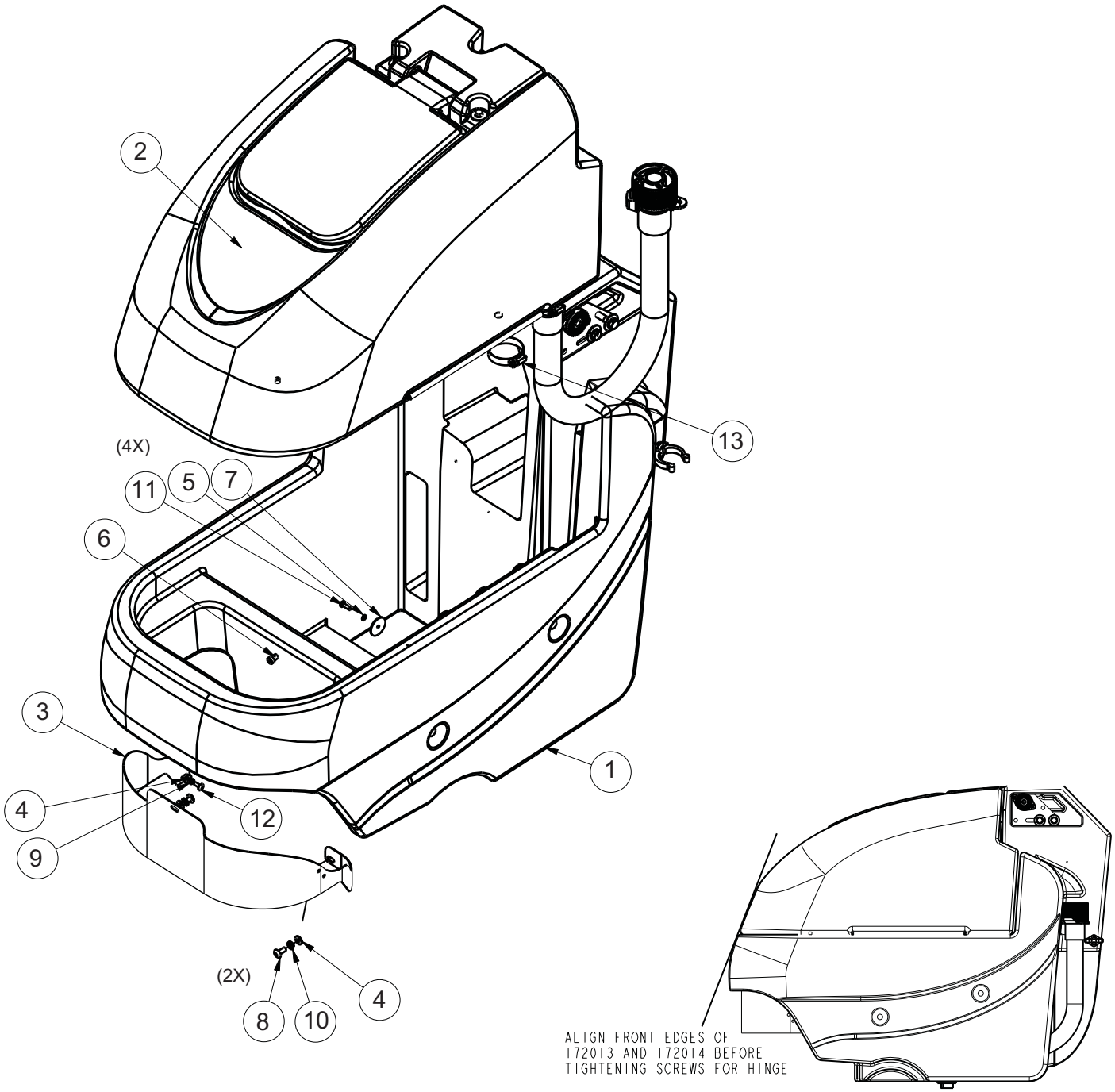

Manufacturer PDF Provided by www.southeasternequipment.net

E17/20/H20 Base Assembly BOM

BILL OF MATERIAL - 172001BASE			
ITEM	PART NO.	QTY	DESCRIPTION
1	172013	1	SOLUTION TANK ASSY
2	172014	1	RECOVERY TANK ASSEMBLY
3	172144	1	COVER, FRONT PANEL E1720
4	711504	3	WASHER-FLAT 1/4 SS
5	711543	4	WASHER-LOCK #10 SPLIT ZP
6	712041	1	BLT-SHOULDER 5/16 X .375 LG X 1/4-20 BLK
7	712312	4	WASHER-BALANCING .187 X 1.25
8	712565	2	SCR-THMS 1/4-20 X .62 SS
9	712757	1	WASHER-LOCK #10 SPLIT SS
10	712758	2	WASHER-LOCK 1/4 SPLIT SS
11	712812	4	SCR-PHMS 10-24 X .62 ZP
12	712822	1	SCR-THMS 10-24 X .50 SS
13	3303255	1	CLAMP-HOSE 1.75 DIA NOMINAL

Manufacturer PDF Provided by www.southeasternequipment.net

Chassis Assembly

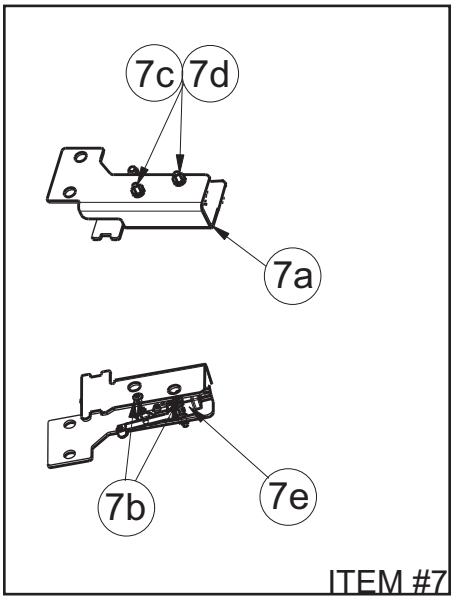

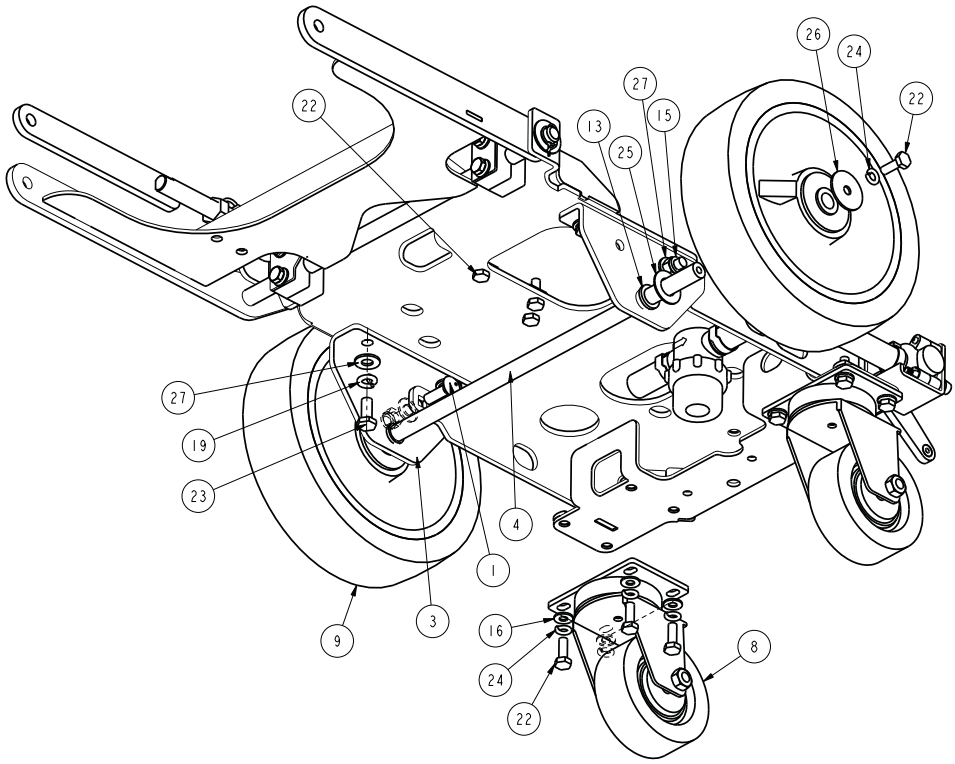

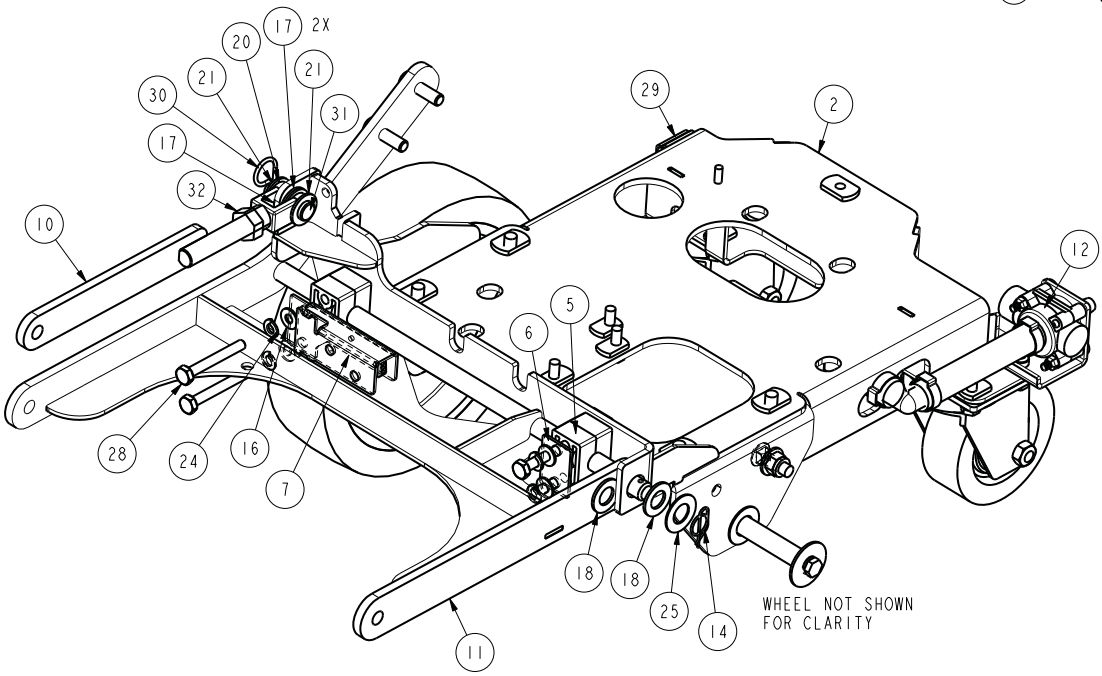

Manufacturer PDF Provided by www.southeasternequipment.net

Chassis Assembly BOM

BILL OF MATERIAL - 172002			
ITEM	PART NO.	QTY	DESCRIPTION
1	70-516-16	2	BLT-CARR 5/16-18 X 1 ZP
2	172020	1	E1720 MAIN FRAME WMT
3	172024	2	BKT, WHEEL, E1720BD
4	172035	1	ROD, .5" E1720 AXLE
5	172038	4	BEARING BLOCK
6	172039	1	BEARING BLOCK PLATE
7	172110	1	DECK SWITCH ASSY
7a	172111	1	BEARING BLOCK/SWITCH PLATE
7b	710493	2	SCR-RHMS 4-40 X .75 ZP
7c	711428	2	NUT-HEX 4-40 ZP
7d	712326	2	WASHER-INT LOCK #4 SS
7e	747603-2	1	SWITCH ASY, MICRO ROLLER W/PACK/CONDUIT
8	172167	2	CASTER, 3 1/2" PU WHEEL
9	172265	2	WHEEL, 8X2X.5ID, 75A W/ GROOVES
10	172368	1	UPPER LIFT ARM
11	172370	1	DISC DECK LIFT WMT, E1720
12	172571	1	ASSY-SOLUTION VALVE E1720
13	260041	2	BUSHING-FLG .502 X .627 X .375 OILITE
14	600578	1	RING-RUE .50 ZP
15	711374	2	NUT-NYLOC 5/16-18 ZP
16	711504	12	WASHER-FLAT 1/4 SS
17	711569	3	WASHER-FLAT .390 X .880 X .062 NYL
18	711592	2	WASHER-FLAT 1/2 X .90 X .064 NYLON
19	712140	4	WASHER-LOCK 5/16 SPLIT SS
20	712265	1	CLEVIS-YOKE, 1/2-20 WITH .375 PIN
21	712301	2	WASHER-FLAT 3/8 X .87 X .06 ZP
22	712562	13	SCR-HH 1/4-20 X .75, 18-8 SS
23	712575	4	SCR-HH 5/16-18 X .75 18-8 SS
24	712758	14	WASHER-LOCK 1/4 SPLIT SS
25	712760	3	WASHER-FLAT .56 X 1.06 X .04 SS
26	712761	2	WASHER-FENDER 1/4 X 1.25 X .059 SS
27	712772	6	WASHER-FLAT .344 X .75 X .06 SS
28	713007	4	SCR-HH 1/4-20 X 2.00 ZP GR 5
29	809444	1	CLIP-CORD
30	833374	1	PIN-HAIRPIN COTTER 3/8
31	833833	1	PIN-CLEVIS 3/8 X 1.25
32	3400449	1	NUT-JAM 1/2-20 ZP

Manufacturer PDF Provided by www.southeasternequipment.net

Recovery Tank Assembly

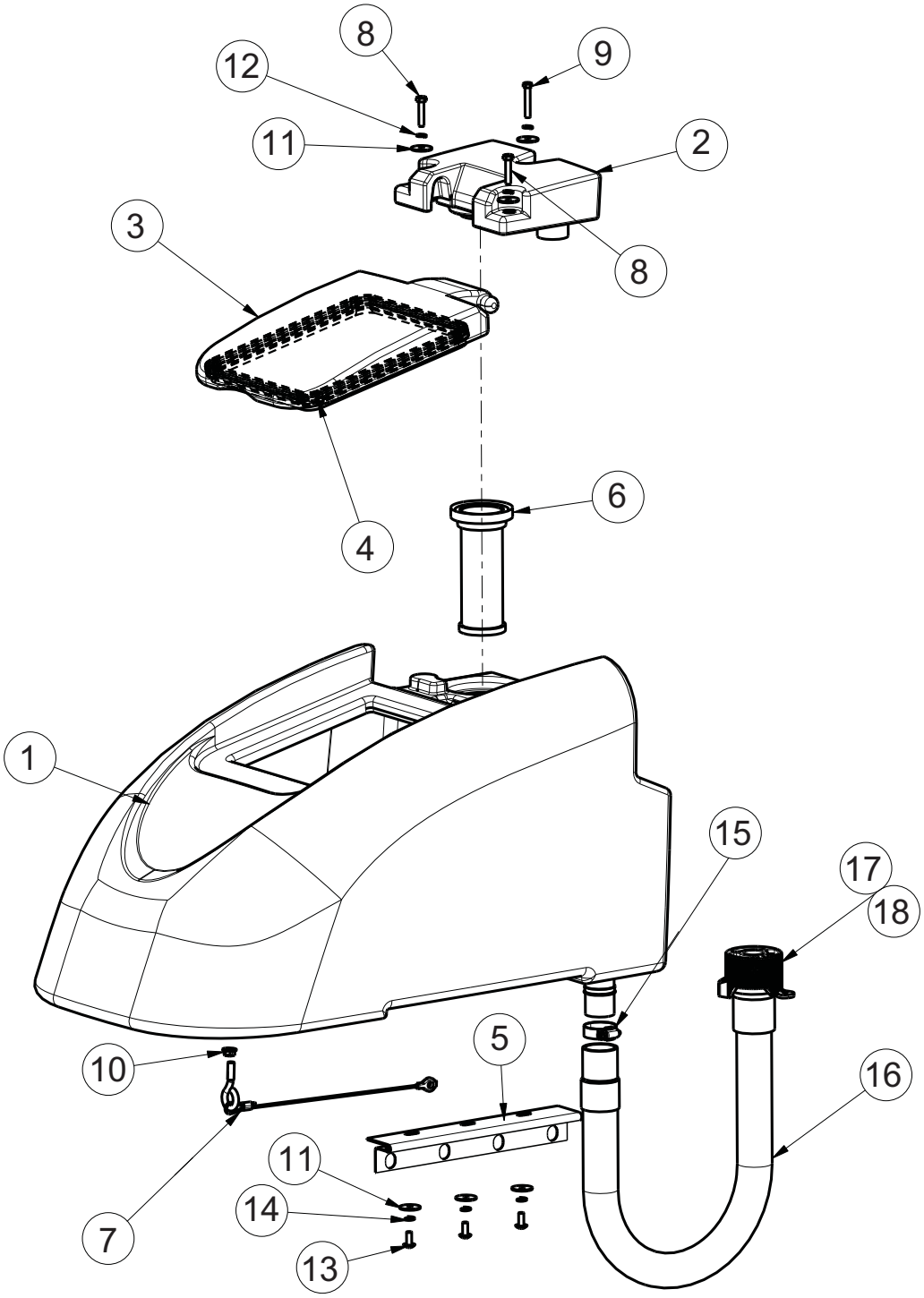

Manufacturer PDF Provided by www.southeasternequipment.net

Recovery Tank Assembly BOM

BILL OF MATERIAL - 172014			
ITEM	**PART NO.**	**QTY**	**DESCRIPTION**
1	172004	1	ES1720 RECOVERY TANK
	172004HSP		E17/E20 REC TANK HOSPITAL VERSION
2	172005	1	ES1720 VACUUM MANIFOLD
	172005HSP		MANIFOLD, VAC - GREEN, HOSPITAL VERSION
3	172007	1	LID, ES1720
4	172017	1	GASKET, ES1720 LID
5	172049	1	HINGE, RECOVERY TANK
6	172132	1	FLOAT, SCREENED
7	172394	1	CABLE, REC TANK 12.0
8	711210	2	SCR-HH 1/4-20 X 1.25 ZP GR 5 FULL THRD
9	711212	1	SCR-HH 1/4-20 X 1.50 ZP GR 5
10	711379	I	NUT-FLANGED WIZZ 5/16-18 ZP
11	711519	6	WASHER-FLAT 1/4 X 1.00 X .06 ZP
12	711544	3	WASHER-LOCK 1/4 SPLIT ZP
13	712565	3	SCR-THMS 1/4-20 X .62 SS
14	712758	3	WASHER-LOCK 1/4 SPLIT SS
15	3303255	1	CLAMP-HOSE 1.75 DIA NOMINAL
16	97090096	1	DRAIN HOSE ASSY, RECOVERY TANK
17	15282072	1	REPLACEMENT O-RING
18	90304528	1	CAP

Manufacturer PDF Provided by www.southeasternequipment.net

Solution Tank Assembly

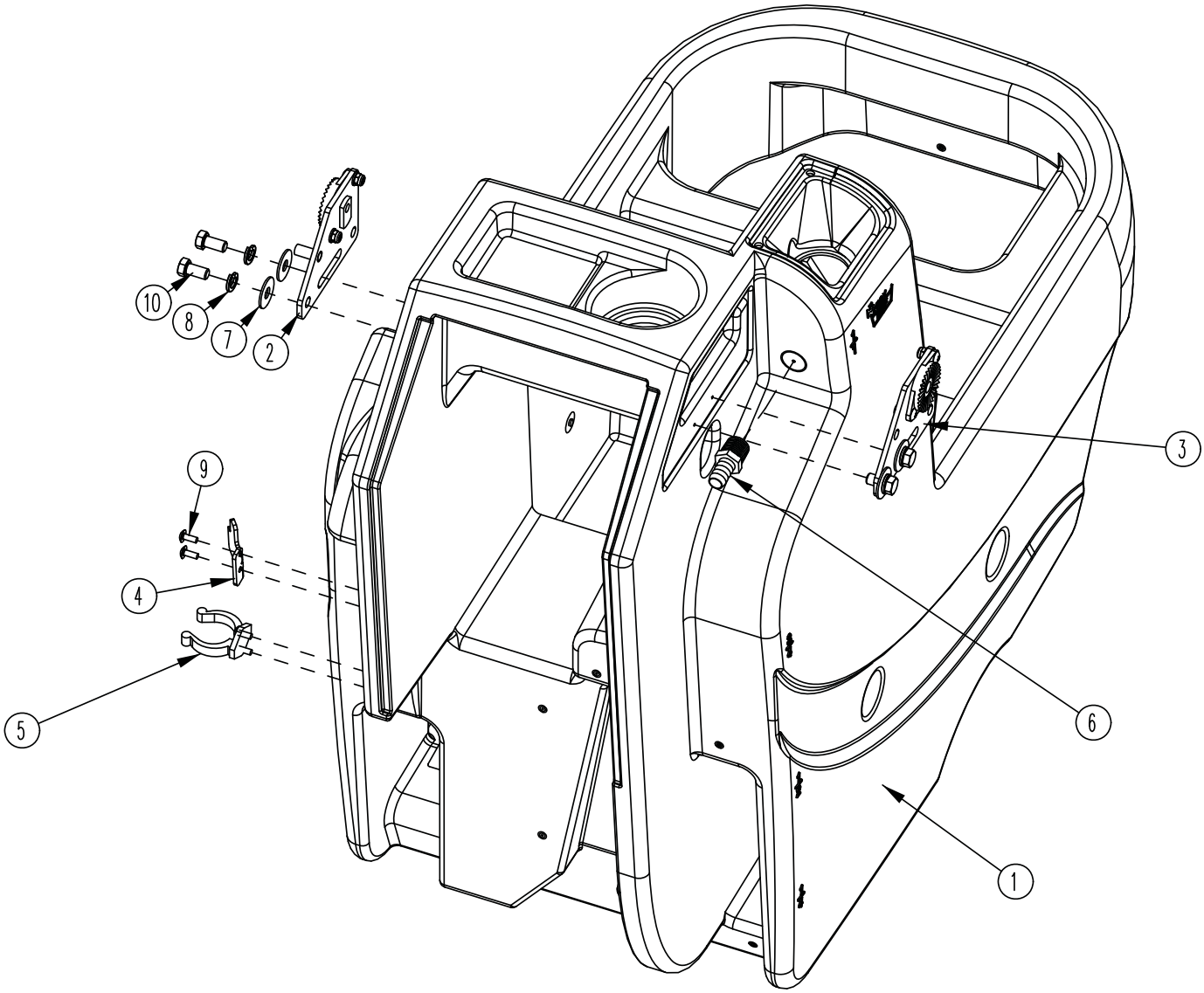

BILL OF MATERIAL - 172013			
ITEM	PART NO.	QTY	DESCRIPTION
1	172003	1	SOLUTION TANK
2	172080	1	HANDLE MOUNT ASSY, LEFT
3	172082	1	HANDLE MOUNT ASSY, RIGHT
4	172341	1	HOOK, DRAIN HOSE WITH TWIST VALVE
5	260579	1	TOOL CLIP, 1.5" HOSE
6	342438	1	FITTING, 1/2 MPT 1/2 HB BRASS
7	711507	4	WSR-FLAT .37 X 1.12 X .06
8	711546	4	WSR-HELICAL 3/8
9	712822	4	SCR-MC TR HD 10-24 X .50 SS
10	713041	4	BLT-HH 3/8-16 X 3/4 #5

Manufacturer PDF Provided by www.southeasternequipment.net

Lift Pedal Stop Assembly

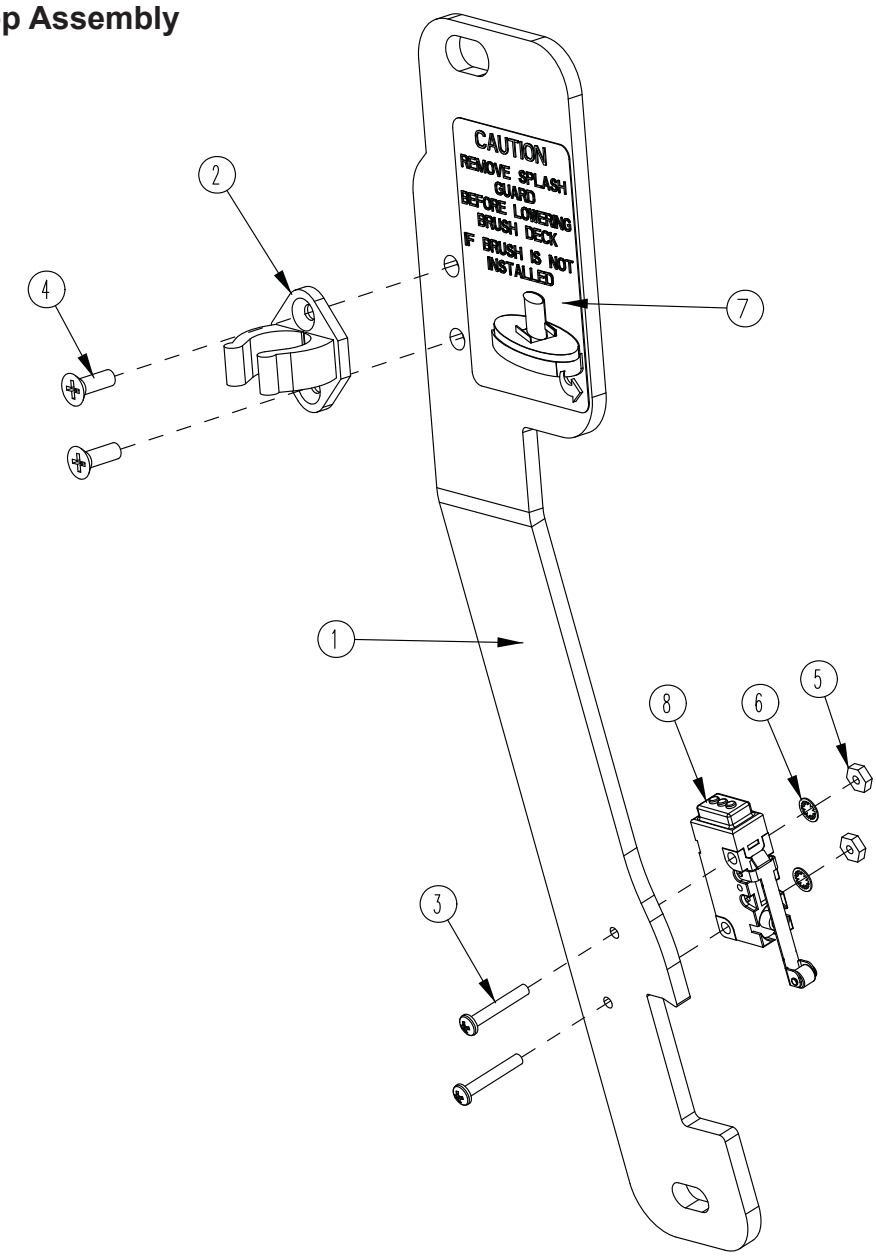

BILL OF MATERIAL - 172157			
ITEM	PART NO.	QTY	DESCRIPTION
1	172036	1	BKT, PEDAL STOP
2	172065	1	CLIP, FOR 1/2" ID HOSE
3	710493	2	SCR-MC 4-40 X .75 PAN HD
4	710530	2	SCR-MC FL HD 8-32 X .50 BRS
5	711428	2	NUT-HEX 4-40
6	712326	2	WSR-INT LOCK #4
7	715685	1	DECAL, REMOVE SPLASH GUARD
8	747603-2	1	SWITCH ASY, MICRO ROLLER W/PACK/CONDUIT

Manufacturer PDF Provided by www.southeasternequipment.net

Battery Tray Assembly

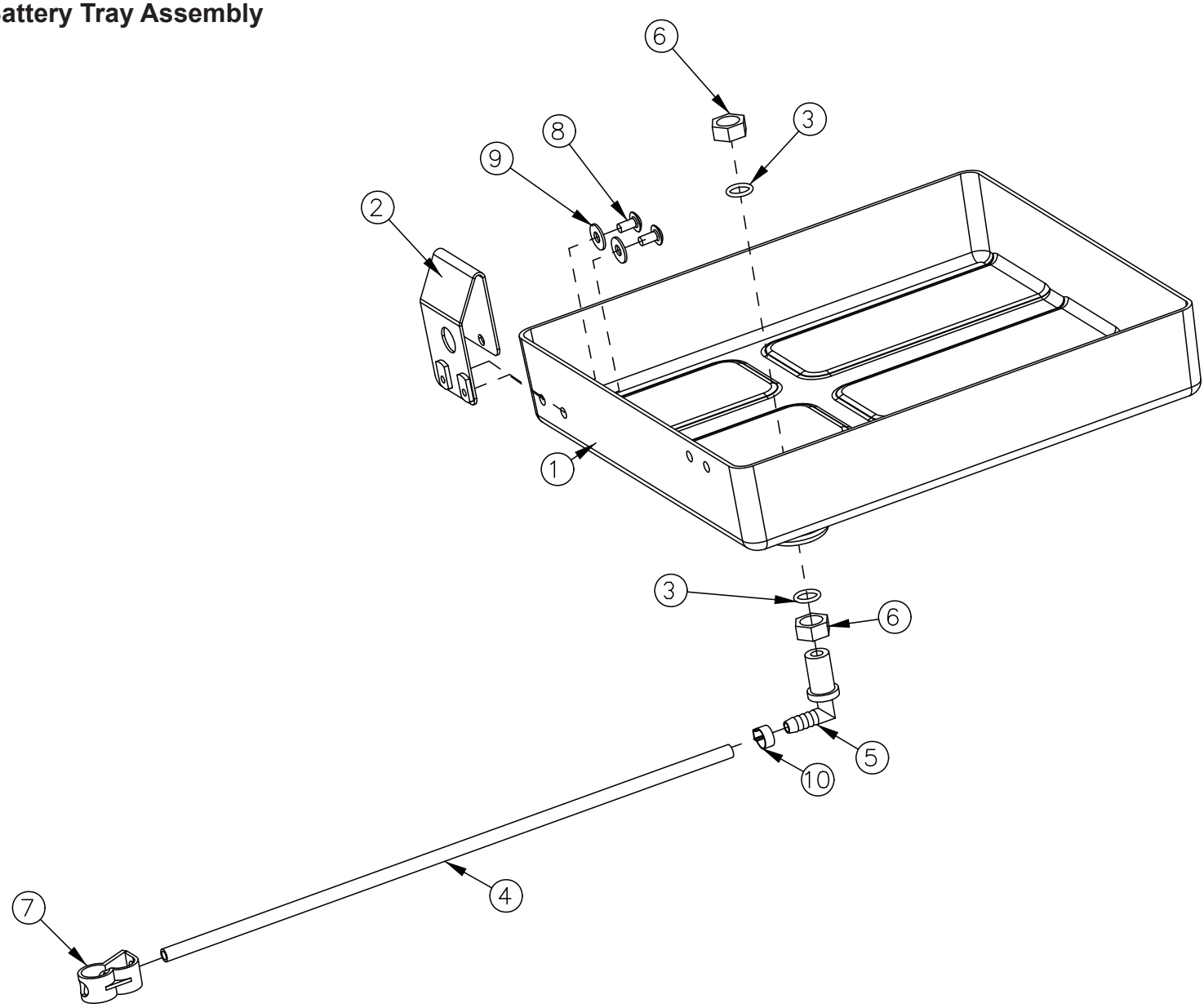

BILL OF MATERIAL - 172012			
ITEM	**PART NO.**	**QTY**	**DESCRIPTION**
1	172116	1	BATTERY BOX
2	172213	1	BKT, SPACER FOR BATTERIES
3	210414	2	O RING 2-113
4	260224	1	18" HOSE
5	320271	1	NOZZLE BODY-ELBOW
6	320272	2	NOZZLE BODY LOCKNUT
7	320273	1	HOSE SHUT-OFF CLAMP
8	710178	2	SCR-MC 1/4-20 X .50 TRUSS STPL
9	711575	2	WSR-FLT .31x.75x..06ST
10	828490	1	CRIMP CLAMP 140R

Manufacturer PDF Provided by www.southeasternequipment.net

Old Style - Solution Valve Assembly

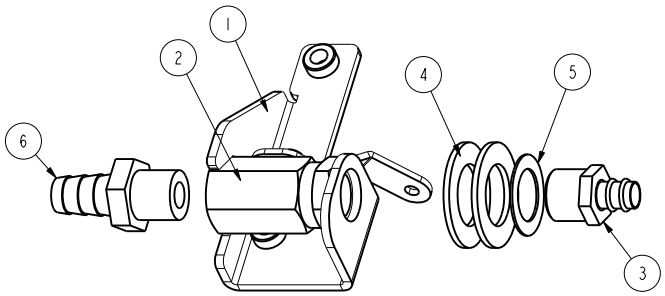

******REPLACING OLD STYLE BRASS SOLUTION VALVE ASSEMBLY 172514 WITH 172571 PLASTIC SOLUTION VALVE ASSEMBLY***

WILL REQUIRE THE PURCHASE OF KIT K-172571

NO LONGER AVAILABLE

OLD STYLE - BILL OF MATERIAL - 172514			
ITEM	PART NO.	QTY	DESCRIPTION
1	172513	1	BRKT, SOL VALVE MOUNT
2	172515	1	BALL VALVE, BRASS, 3/8FNPT, CUST HANDLE
3	320265	1	FTG-ADAPTER 3/8 MPT X 3/8 HB BRASS
4	711512	2	WASHER-FLAT 3/4 X 1.37 X .08 ZP
5	711513	1	WASHER-FLAT .689 X 1.06 X .029 SS
6	827008	1	FTG-ADAPTER 3/8 MPT 1/2 HB BRASS

New Style - Solution Valve Assembly

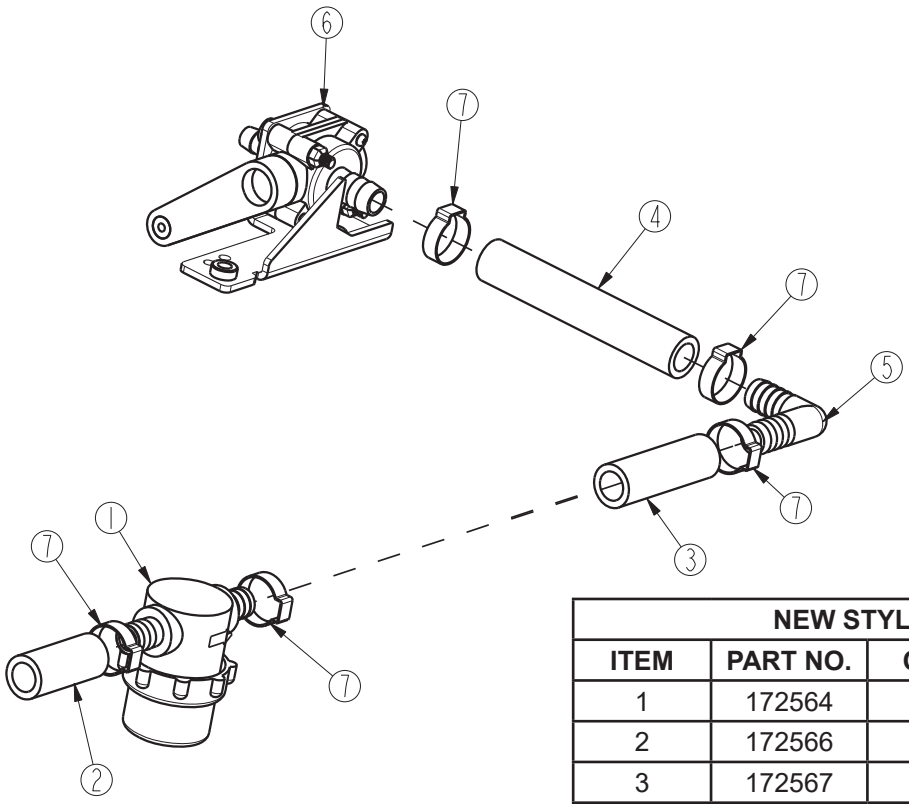

NEW STYLE - BILL OF MATERIAL - 172571			
ITEM	PART NO.	QTY	DESCRIPTION
1	172564	1	FILTER-SOLUTION E1720
2	172566	1	HOSE- 1/2ID X 1.75" NYLOBRAID
3	172567	1	HOSE-1/2"ID X 2.375" NYLOBRAID
4	172568	1	HOSE-WIRE REINF 1/2"ID X 4.25"
5	172569	1	FTG-ELBOW 90 1/2 HB X 1/2 HB NYLON
6	172579	1	SOLUTION CNTRL VALVE, WITH BRKT
7	383347	5	CLAMP-CRIMP 1/2 HOSE

Manufacturer PDF Provided by www.southeasternequipment.net

Solution Control Handle Assembly

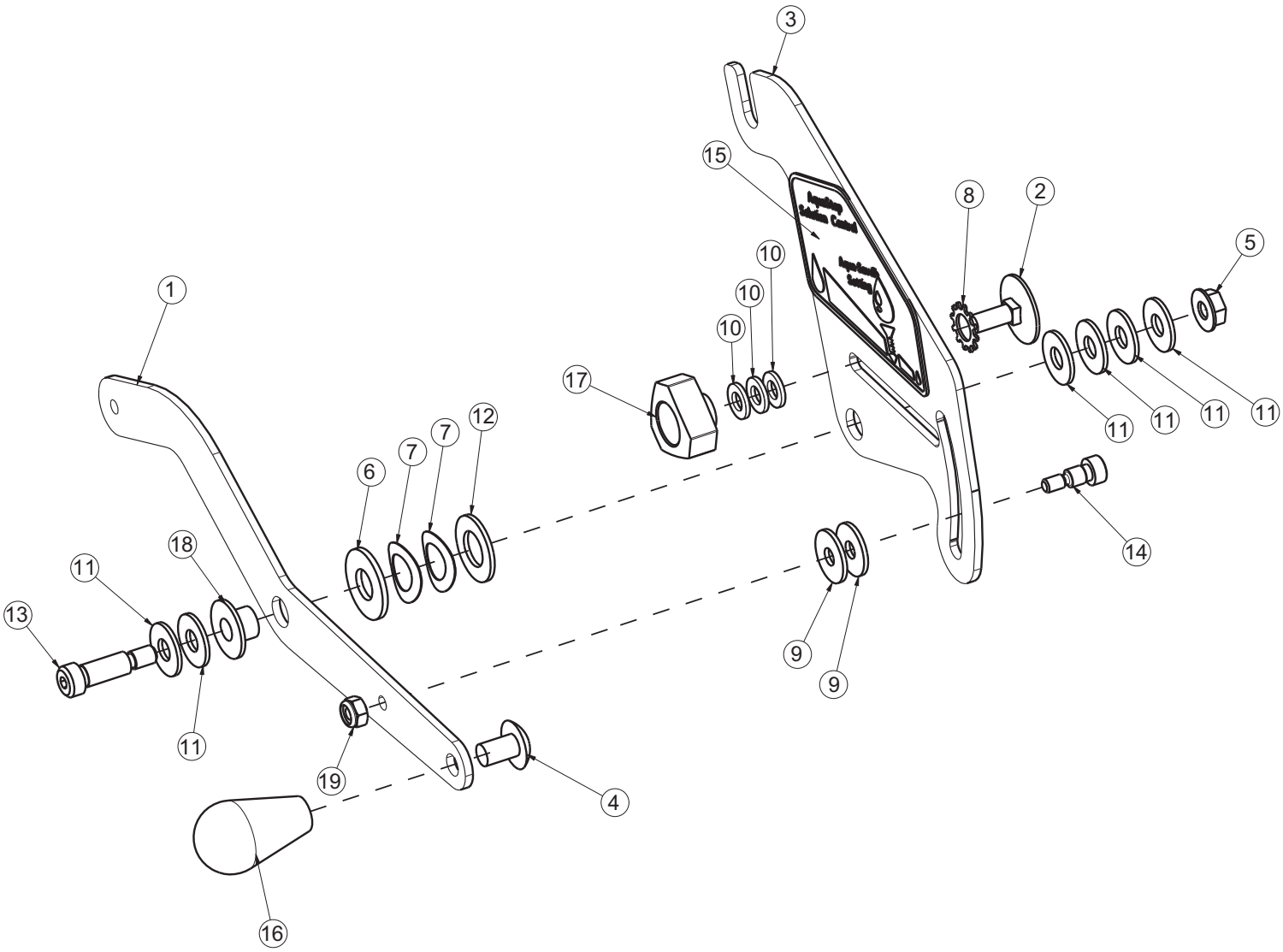

Manufacturer PDF Provided by www.southeasternequipment.net

Solution Control Handle Assembly BOM

BILL OF MATERIAL - 172577			
ITEM	PART NO.	QTY	DESCRIPTION
1	172061	1	LEVER, SOLUTION CONTROL BRK'T
2	172424	1	BLT-ELEVATOR 1/4-20 x .75 ZINC
3	172575	1	BRKT, AQUASTOP SOL CNTRL
4	710195	1	SCR-PHMS 5/16-18 X .50 ZP
5	711425	1	NUT-FLANGED WIZZ 1/4-20 ZP
6	711508	1	WASHER-FLAT 3/8 X 1.00 X .08 ZP
7	711524	2	WASHER-FLAT 3/8 X 1.00 X .08 ZP
8	711539	1	WASHER-EXT LOCK 3/8 ZP
9	711550	2	WASHER-FLAT 1/4 X .75 NYLON
10	711566	3	WASHER-FLAT #12 X .50 X .065 ZP
11	711575	6	WASHER-FLAT 1/4 X .75 X .06 ZP
12	711592	1	WASHER-FLAT 1/2 X .90 X .064 NYLON
13	712070	1	BLT-SHOULDER 5/16 X .75 LG X 1/4-20 BLK
14	713598	1	BLT-SHOULDER 1/4 X .313 LG X 10-24 SS
15	715690	1	DECAL, AQUASTOP SOLUTION CONTROL
16	760592	1	KNOB-OVAL TAPERED
17	833214	1	KNOB-3 SIDED 1/4-20 INSERT
18	840202	1	BUSHING-FLG .31 X .435 X .325 NYL
19	3400399	1	NUT-NYLOC 10-24 SS

Manufacturer PDF Provided by www.southeasternequipment.net

Handle Assembly

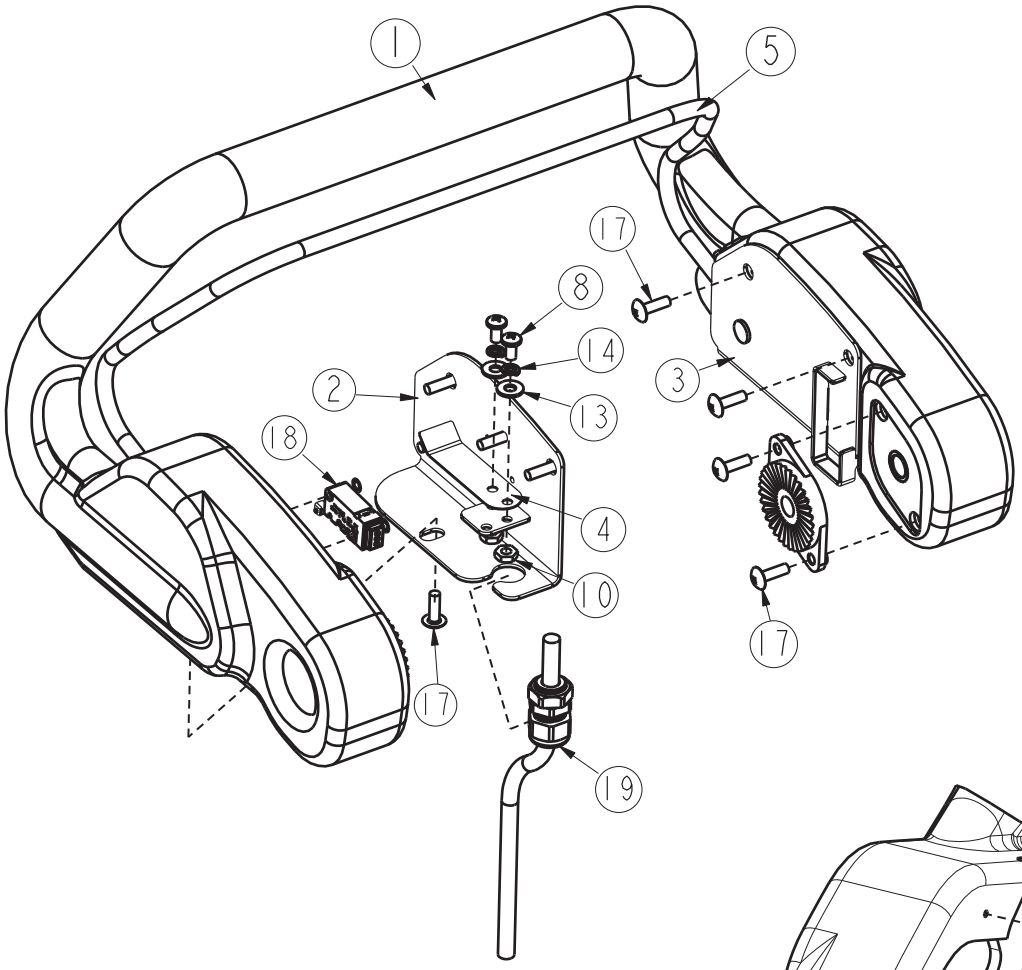

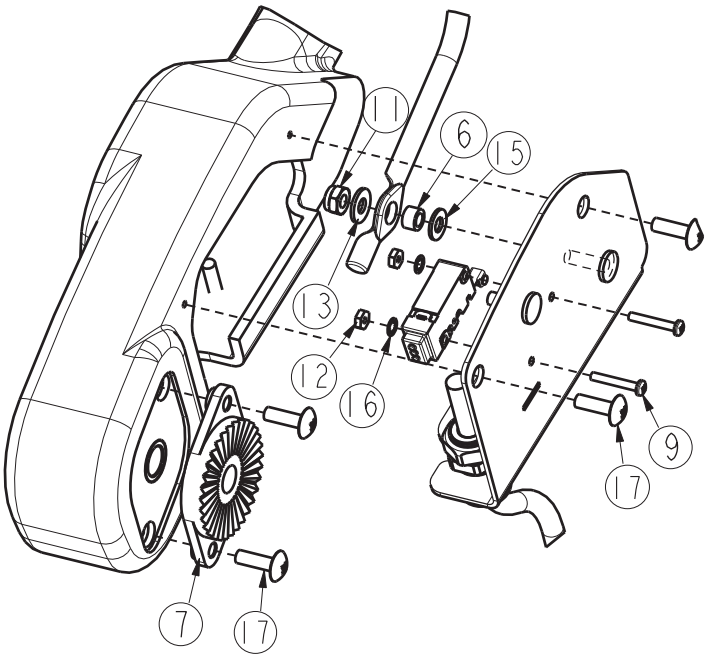

NOTE: APPLY LOCTITE TO ALL 712830 SCREWS (10-24 X .62)

Manufacturer PDF Provided by www.southeasternequipment.net

Handle Assembly BOM

BILL OF MATERIAL - 172016			
ITEM	**PART NO.**	**QTY**	**DESCRIPTION**
1	172006	1	HANDLE, ES1720
2	172053	1	BAIL PLATE WMT RH
3	172054	1	BAIL PLATE WMT LH
4	172057	2	LEAF SPRING, ES1720
5	172059	1	ES1720 BAIL, HANDLE
6	172074	2	SPACER, 5/16OD X 17GA, ALUM
7	270143	2	HANDLE PIVOT JAW
8	710353	4	SCR-PHMS 10-32 X .37 ZP
9	710493	2	SCR-RHMS 4-40 X .75 ZP
10	711310	4	NUT-HEX 10-32 ZP
11	711350	2	NUT-NYLOC 10-32 ZP
12	711428	2	NUT-HEX 4-40 ZP
13	711503	6	WASHER-FLAT #10 X .50 ZP
14	711543	4	WASHER-LOCK #10 SPLIT ZP
15	712320	2	WASHER-FLAT 20 X .45 X .048 NYLON
16	712326	2	WASHER-INT LOCK #4 SS
17	712830	10	SCR-THMS 10-24 X .62 ZP
18	747603-3	1	SWITCH ASY, MICRO ROLLER W/PACK
19	747715	1	ABLE ASY, 5 COND 18G CONSOLE

Manufacturer PDF Provided by www.southeasternequipment.net

Electrical Box Assembly

For machines with
Curved Squeegee

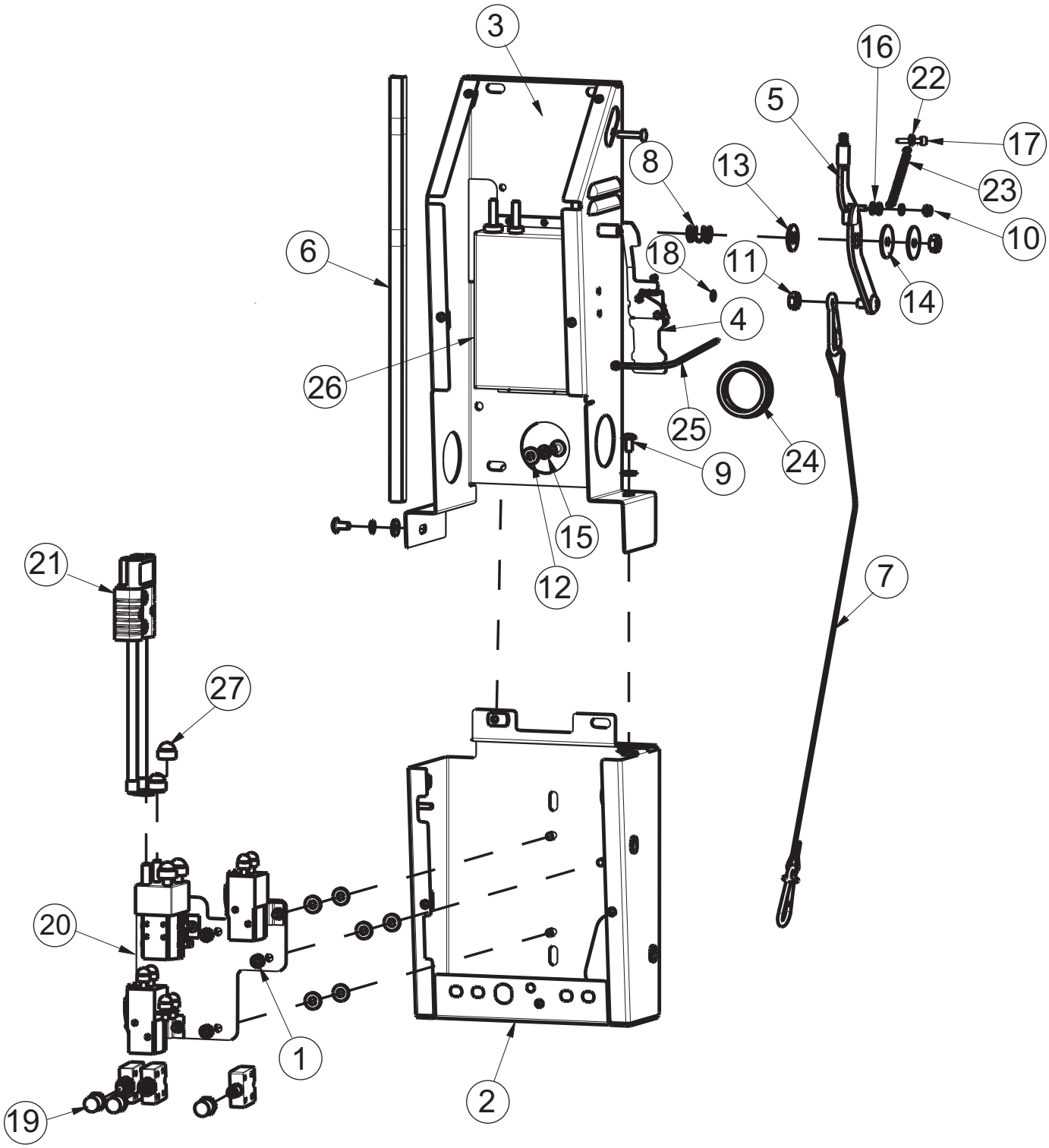

Manufacturer PDF Provided by www.southeasternequipment.net

Electrical Box Assembly BOM

BILL OF MATERIAL			
ITEM	PART NO.	QTY	DESCRIPTION
1	369-416	3	NUT-HEX 1/4-20 ZP DOUBLE SERRATED
2	172077	1	ELEC BOX BOTTOM WMT
3	172088	1	ELEC BOX TOP WMT
4	172141	1	VAC SWITCH ASSY
5	172152	1	WELDMENT-VAC LEVER
6	172188	1	FOAM TAPE, 1/2" SQ X 16.5"
7	172381	1	SQUEEGEE CABLE ASSY
8	670093	1	SPRING-COMP .502 X .6 X 1 ZINC
9	710178	3	SCR-THMS 1/4-20 X .50 ZP
10	711372	1	NUT-NYLOC 8-32 ZP
11	711383	2	NUT-HEX 5/16-18 ZP REVERSE LOC
12	711505	9	WASHER-FLAT 1/4 ZP
13	711508	1	WASHER-FLAT 3/8 X 1.00 X .08 ZP
14	711516	2	WASHER-FLAT 5/16 X 1.25 X .05 ZP
15	711544	2	WASHER-LOCK 1/4 SPLIT ZP
16	712320	2	WASHER-FLAT 20 X .45 X .048 NYLON
17	712533	1	SCR-PHMS 10-24 X 1.25 SS
18	712770	2	WASHER-INT TOOTH LOCK #10 SS
19	742748	3	CIRCUIT BREAKER-BOOT
20	747630	1	ELECTRICAL PANEL ASY, E1720BD
20a	172189	1	PANEL, RELAY MOUNT
20b	747609	1	CIRCUIT BREAKER-4.0AMP PUSH BUTTON
20c	740247	1	CIRCUIT BREAKER-30AMP BUTTON
20d	740220	1	CIRCUIT BREAKER-20AMP PUSH BUTTON
21	747637	1	WIRE ASY, MACHINE-BATTERY E1720
22	760134	2	MOUNT RING
23	762084	1	SPRING-EXT .25OD X 2" F.L. MUSIC
24	762400	1	BUSH -HEYCO 1-5/8 X 2-1/8 X 29/64 2400 B
25	828062	1	CABLE TIE LARGE
26	***	1	CHARGERS ON PAGE 5
27	15592033	2	CAP, SAFETY NUT COVER M8

Manufacturer PDF Provided by www.southeasternequipment.net

Electrical Panel Assembly

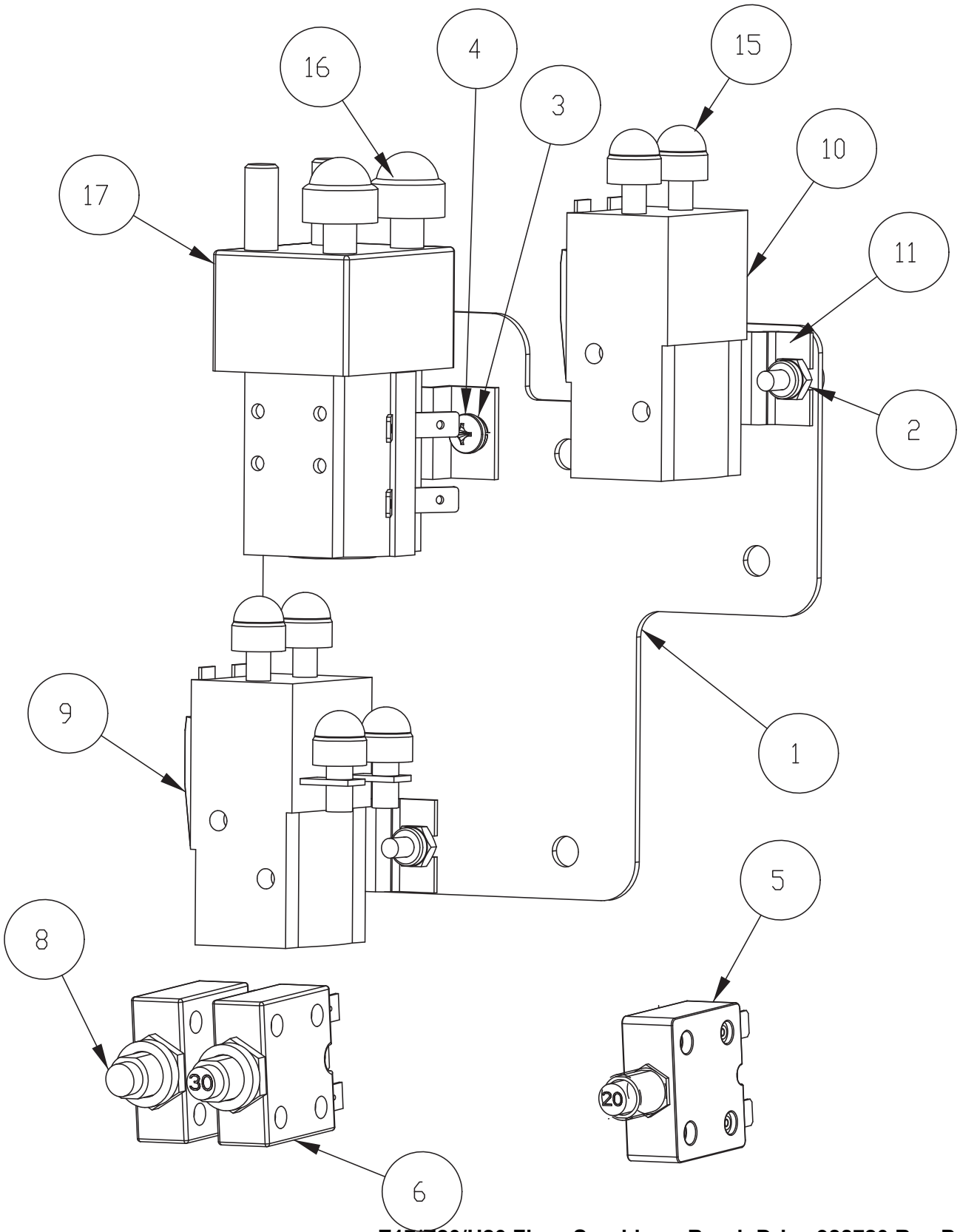

Manufacturer PDF Provided by www.southeasternequipment.net

Electrical Panel Assembly BOM

BILL OF MATERIAL - 747630			
ITEM	**PART NO.**	**REQ'D**	**DESCRIPTION**
1	172189	1	PANEL, RELAY MOUNT
2	711350	4	NUT -NYLOC 10-32
3	711543	2	WSR-HELICAL #10
4	712800	2	SCR-MC 10-24 X .25 ST PL
5	740220	1	CIRCUIT BREAKER-20AMP 2-T ERMIN
6	740247	1	CIRCUIT BREAKER-30AMP PUSH BUT
7	740482	2	DIODE ASY, 1N4007 W/PIGGY (NOT SHOWN)
8	747609	1	CIRCUIT BREAKER-4.0AMP PUSHBUT
9	747615	1	RELAY, 2 POLE CURT IS (1720)
10	747616	1	RELAY, 1 POLE CURT IS (1720)
11	747619	2	BRACKET , RELAY 747615 & 747616
12	747640	1	WIRE ASY, 10G RED 13" (NOT SHOWN)
13	747641	1	WIRE ASY, 10G RED 7" (NOT SHOWN)
14	747653	1	WIRE HARNESS, E1720BD MAIN (NOT SHOWN)
15	15592025	6	CAP, SAFET Y NUT COVER M 6
16	15592033	2	CAP, SAFET Y NUT COVER M 8
17	90331026	1	RELAY, 24VDC 2 POLE 100A (HAKO)

Manufacturer PDF Provided by www.southeasternequipment.net

Vacuum Switch Assembly

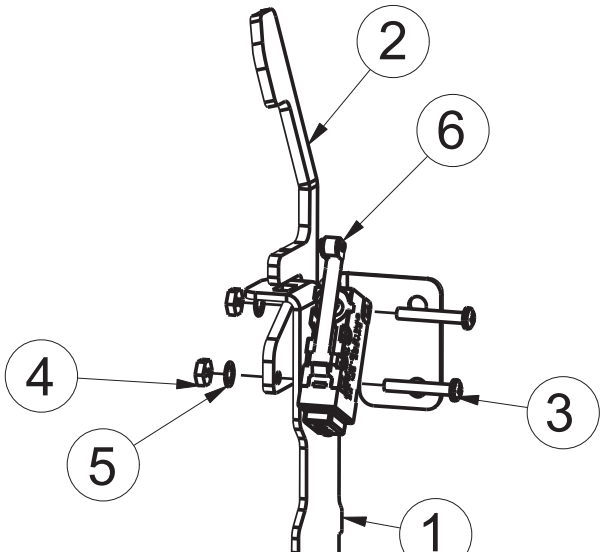

BILL OF MATERIAL - 172141			
ITEM	PART NO.	QTY	DESCRIPTION
1	172140	1	BKT, VAC SWITCH MOUNT
2	172337	1	VAC SWITCH COVER
3	710493	2	SCR-RHMS 4-40 X .75 ZP
4	711428	2	NUT-HEX 4-40 ZP
5	712326	2	WASHER-INT LOCK #4 SS
6	747603-2	1	SWITCH ASY, MICRO ROLLER W/PACK/CONDUIT

Manufacturer PDF Provided by www.southeasternequipment.net

For machines with
Straight Squeegee

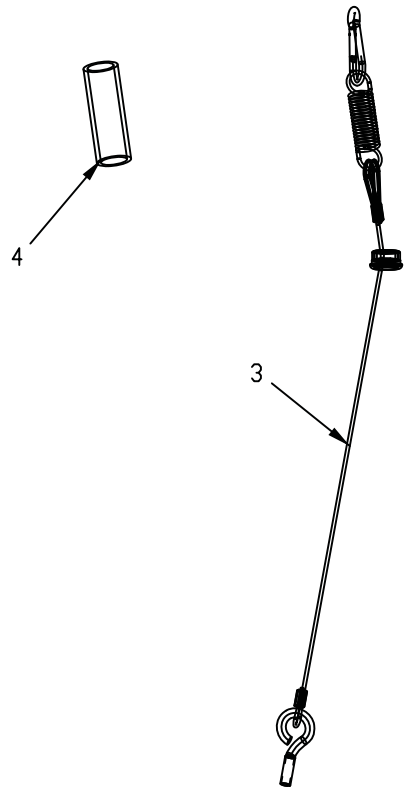

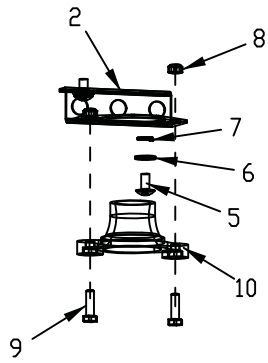

For machines with **Straight Squeegee**
Replace Cable Assembly and reference these additional parts

ITEM	PART NO.	QTY	DESCRIPTION	ITEM	PART NO.	QTY	DESCRIPTION
1	719	1	LOCTITE	6	711505	2	WASHER-FLAT 1/4 ZP
2	172128	1	BKT, LOWER BUSHING MOUNT	7	711544	2	WASHER-LOCK 1/4 SPLIT ZP
3	172149	1	CABLE, SQUEEGEE LIFT ASSY, E17BD	8	717018	2	NUT-NYLOC M6 X 1.0 ZP
4	172331	1	PIPE, 3/4 X 3.0" SCHD 40 PVC	9	717022	2	SCR-HH M6-1.0 X 20 ZP CLASS 8.8
5	710178	2	SCR-THMS 1/4-20 X .50 ZP	10	90508391	1	BUSHING, CABLE GUIDE, HAKO

Manufacturer PDF Provided by www.southeasternequipment.net

Electrical Box Cover Assembly

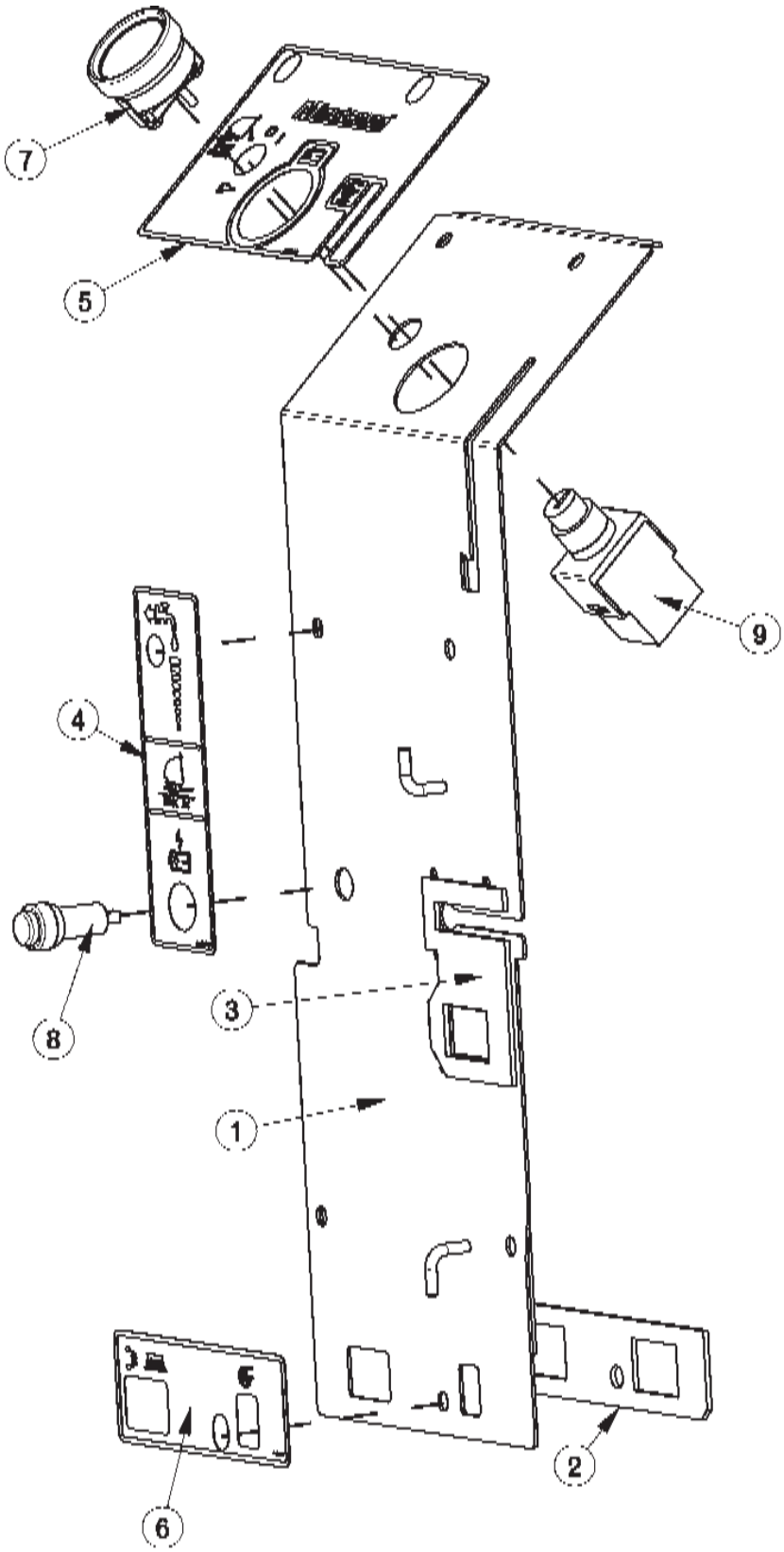

Manufacturer PDF Provided by www.southeasternequipment.net

Electrical Box Cover Assembly BOM

BILL OF MATERIAL - 172073			
ITEM	**PART NO.**	**QTY**	**DESCRIPTION**
1	172181	1	ELEC BOX, COVER, WMT
2	172193	1	GASKET, CB OUTLINE
3	172194	1	GASKET, CHARGER CORD PLATE
4	715672	1	DECAL, 1720 BD ELEC BOX
5	715673	1	DECAL, 1720 BD DASHBOARD
6	715675	1	DECAL, BD CIRC BKRS
7	740216	1	VOLT METER
8	***	1	CHARGE STATUS INDICATOR (***INCLUDED WITH CHARGER***)
9	747617-1	1	KEYSWITCH ASY, KEYSWITCH + WIR

Manufacturer PDF Provided by www.southeasternequipment.net

Vac Motor Assembly

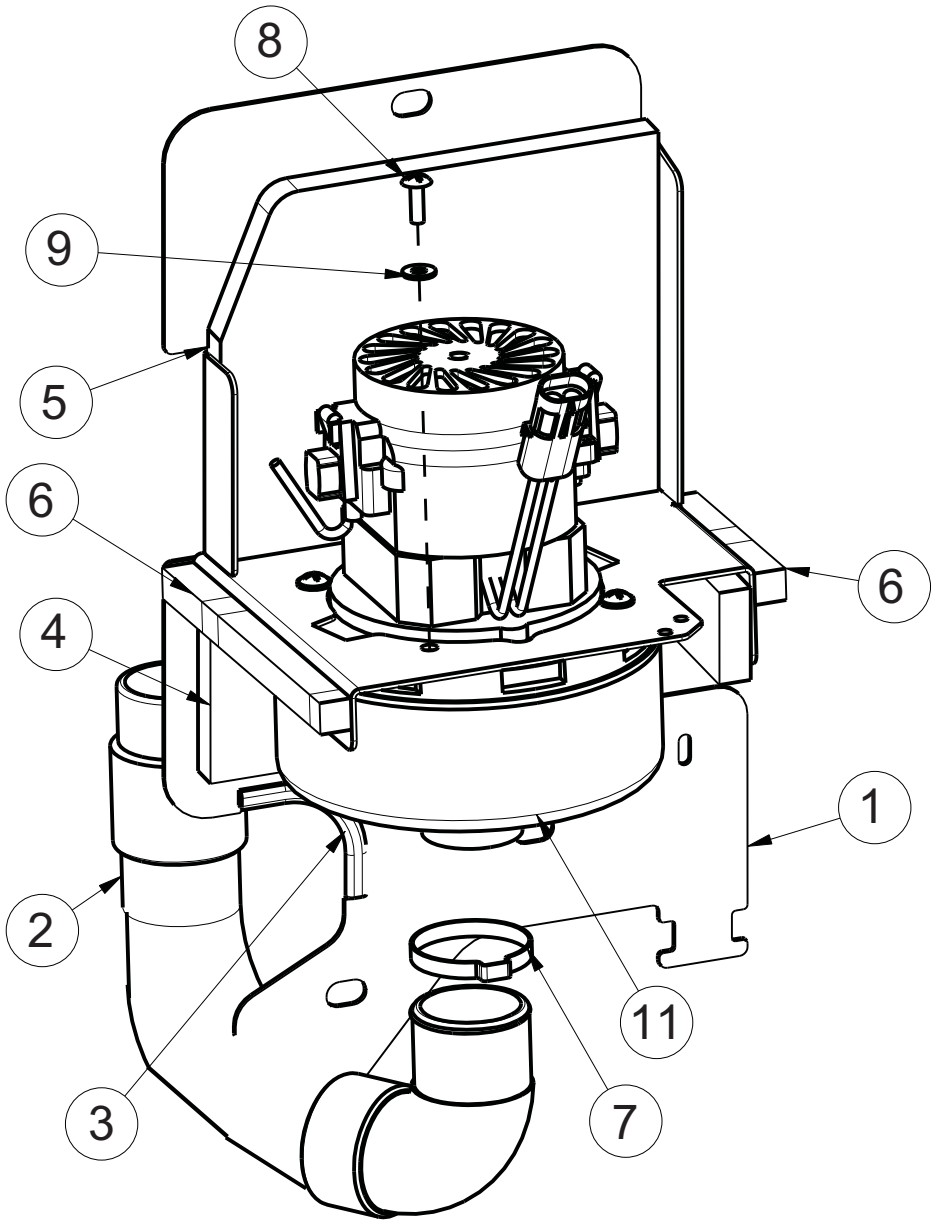

Manufacturer PDF Provided by www.southeasternequipment.net

Vac Motor Assembly BOM

BILL OF MATERIAL - 172050			
ITEM	**PART NO.**	**QTY**	**DESCRIPTION**
1	172045	1	VAC MOUNT WMT
2	172048	1	HOSE, STRETCH 13", 90 CUFF
3	172124	1	EDGE TRIM, .063 X 3.0, BLACK
4	172186	1	FOAM COVER FRONT 1, 1/2 THICK
5	172187	1	FOAM COVER FRONT 2, 1/2" THICK
6	172188	.5	FOAM TAPE, 1/2" SQ X 16.5"
7	450095	1	CLAMP-CRIMP 1.75" OD
8	711160	4	SCR-HI/LO 10 X .625 BLACK ZINC
9	711503	4	WASHER-FLAT #10 X .50 ZP
10	715967	1	DECAL - WARNING, DO NOT PICK UP (NOT SHOWN)
11	747607-1	1	VAC MOTOR ASY, 24V PERIF BYPASS
	747665-1		VAC MOTOR ASSY, HOSP VERSION

Manufacturer PDF Provided by www.southeasternequipment.net

17” Brush Deck Assembly

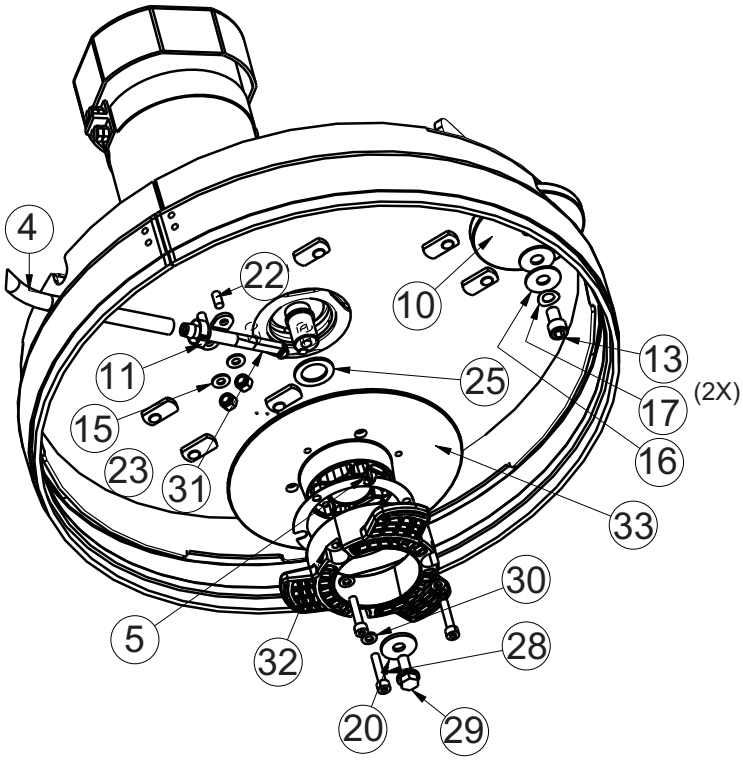

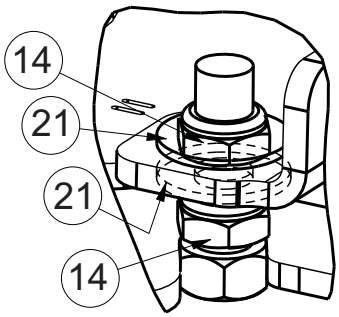

DETAIL A

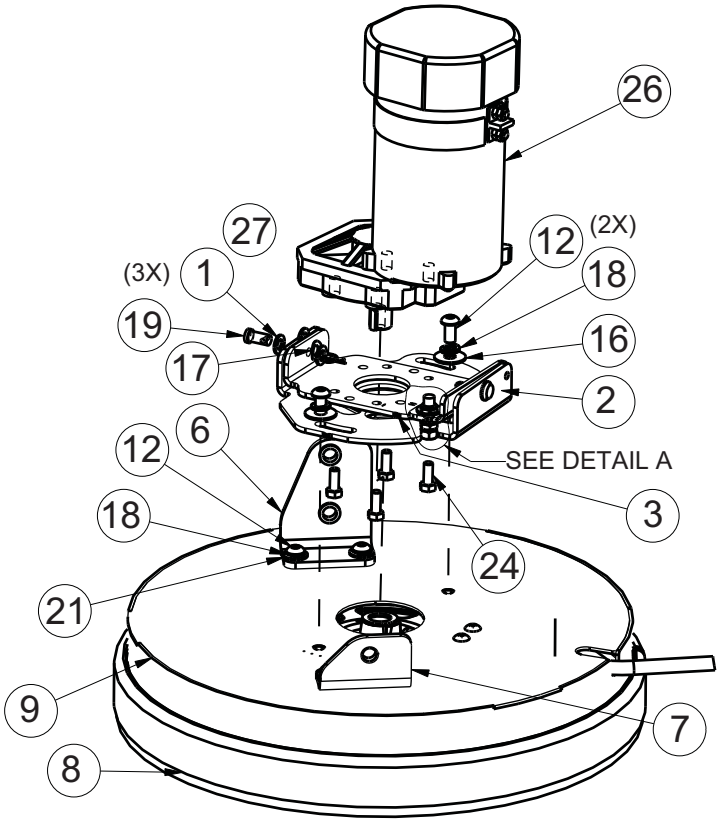

Manufacturer PDF Provided by www.southeasternequipment.net

17” Brush Deck Assembly BOM

BILL OF MATERIAL - 172090			
ITEM	PART NO.	QTY	DESCRIPTION
1	3400087	6	WASHER-FLAT .390 X .687 ZP
2	172040	1	WELDMENT-DECK ANGLE ADJUST
3	172044	1	PLATE MOTOR MOUNT
4	241097	1	HOSE-WIRE REINF 3/8 X 31"
5	172210	1	SPACER, HUB
6	172296	1	BKT, E1720 DECK MOUNT RT
7	172297	1	BKT, E1720 DECK MOUNT LEFT
8	172363-1	1	E17 DECK SKIRT
9	172365	1	17" BRUSH DECK WMT
10	210153	1	ROLLER WHEEL
11	450076	1	CLAMP-HOSE 5/8 (.590-.791) SS
12	710990	6	SCR-BHSCS 3/8-24 X .75 ZP
13	710991	1	SCR-HH 3/8-24 X .62 ZP GR 5
14	711375	2	NUT-NYLOC 3/8-16 ZP
15	711504	2	WASHER-FLAT 1/4 SS
16	711507	4	WASHER-FLAT 3/8 X 1.12 X .06
17	711523	3	WASHER-WAVE .37 X .68 X .08
18	711546	6	WASHER-LOCK 3/8 SPLIT ZP
19	711679	2	PIN-CLEVIS 3/8 X .750 ZP
20	711855	1	WASHER-FENDER 3/8 X 1.12 X .10 ZP HARD
21	712301	6	WASHER-FLAT 3/8 X .87 X .06 ZP
22	712565	2	SCR-THMS 1/4-20 X .62 SS
23	712667	2	NUT-NYLOC 1/4-20 SS
24	717024	4	SCR-HH M8-1.25 X 20 ZP GRADE 8.8
25	717025	1	WASHER-FLAT 13/16 X 1.25 X .08 ZP
26	747600	1	MOTOR, 24VDC PM 600W
27	3400125	2	RING-RUE 3/8
28	11127000	3	SCR-SHCS M6X30 SS, ISO4762
29	11717203	1	BLT-HH FLG M8X1.25X20 PRECOTE, ZD 10.9
30	12310256	3	WSR-FLT 6.4X12X1.6, SS DIN125
31	90311663	1	FITTING, WATER NOZZLE W/ MOUNT HOLES
32	90541814	1	DRIVE HUB, PLASTIC, 3-LOBE
33	172096MCH	1	HUB BASE MACHINED

Manufacturer PDF Provided by www.southeasternequipment.net

20” Brush Deck Assembly

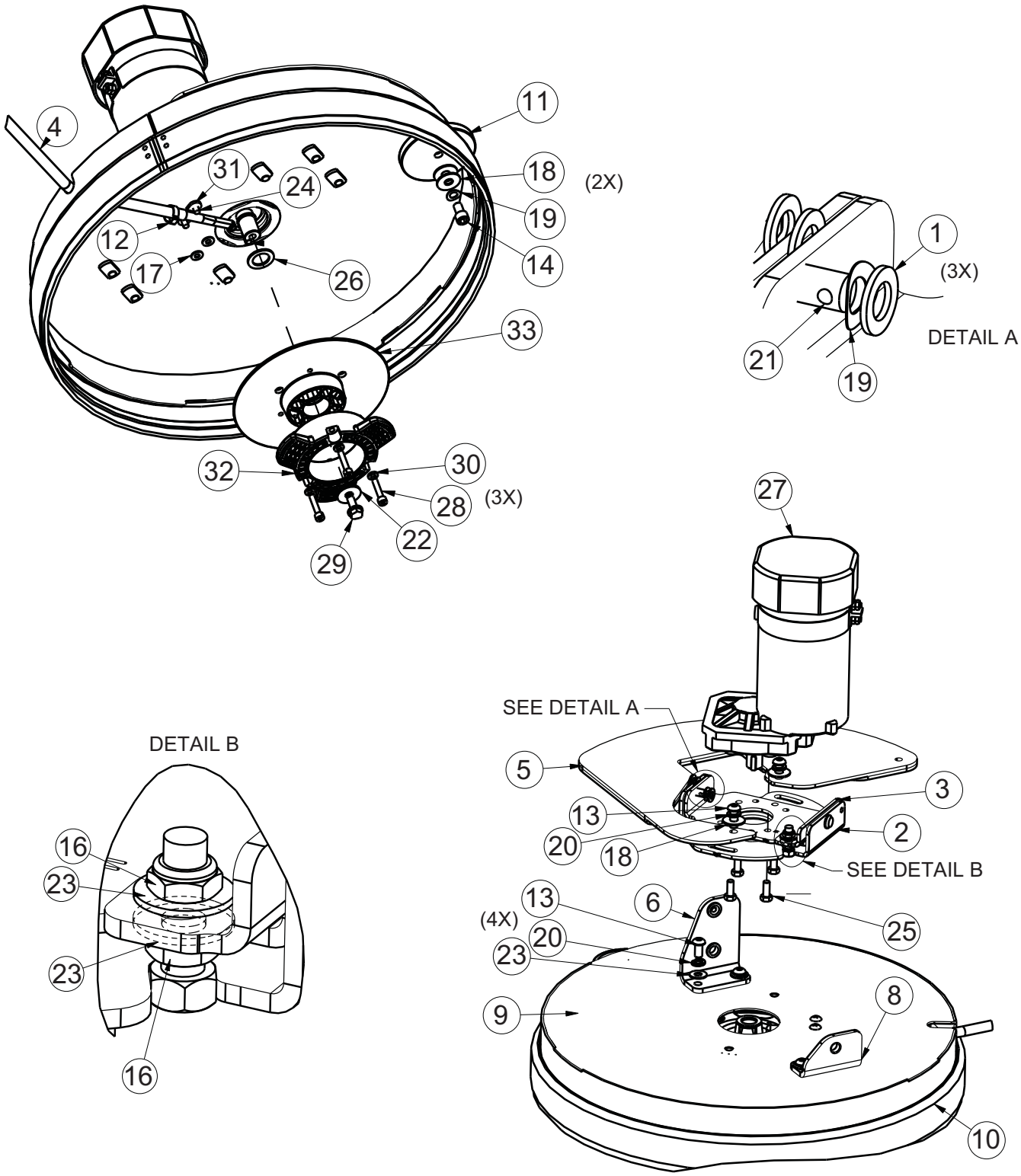

Manufacturer PDF Provided by www.southeasternequipment.net

20” Brush Deck Assembly BOM

BILL OF MATERIAL - 172100			
ITEM	PART NO.	QTY	DESCRIPTION
1	3400087	6	WASHER-FLAT .390 X .687 ZP
2	172040	1	WELDMENT-DECK ANGLE ADJUST
3	172044	1	PLATE MOTOR MOUNT
4	241097	1	HOSE-WIRE REINF 3/8 X 31"
5	172208-1	1	E20 BRUSH DECK PLATE
6	172296	1	BKT, E1720 DECK MOUNT RT
8	172297	1	BKT, E1720 DECK MOUNT LEFT
9	172375	1	DECK COVER WMT, 20"
10	172384	1	E20 FLOATING BRUSH DECK SKIRT
11	210153	1	ROLLER WHEEL
12	450076	1	CLAMP-HOSE 5/8 (.590-.791) SS
13	710990	6	SCR-BHSCS 3/8-24 X .75 ZP
14	710991	1	SCR-HH 3/8-24 X .62 ZP GR 5
16	711375	2	NUT-NYLOC 3/8-16 ZP
17	711504	2	WASHER-FLAT 1/4 SS
18	711507	4	WASHER-FLAT 3/8 X 1.12 X .06
19	711523	3	WASHER-WAVE .37 X .68 X .08
20	711546	6	WASHER-LOCK 3/8 SPLIT ZP
21	711679	2	PIN-CLEVIS 3/8 X .750 ZP
22	711855	1	WASHER-FENDER 3/8 X 1.12 X .10 ZP HARD
23	712301	6	WASHER-FLAT 3/8 X .87 X .06 ZP
24	712565	2	SCR-THMS 1/4-20 X .62 SS
25	717024	4	SCR-HH M8-1.25 X 20 ZP GRADE 8.8
26	717025	1	WASHER-FLAT 13/16 X 1.25 X .08 ZP
27	747600	1	MOTOR, 24VDC PM 600W
28	11127000	3	SCR-SHCS M6X30 SS, ISO4762
29	11717203	1	BLT-HH FLG M8X1.25X20 PRECOTE, ZD 10.9
30	12310256	3	WSR-FLT 6.4X12X1.6, SS DIN125
31	90311663	1	FITTING, WATER NOZZLE W/ MOUNT HOLES
32	90541814	1	DRIVE HUB, PLASTIC, 3-LOBE
33	172096MCH	1	HUB BASE MACHINED

Manufacturer PDF Provided by www.southeasternequipment.net

E17/20/H20 Brush Hub Assembly

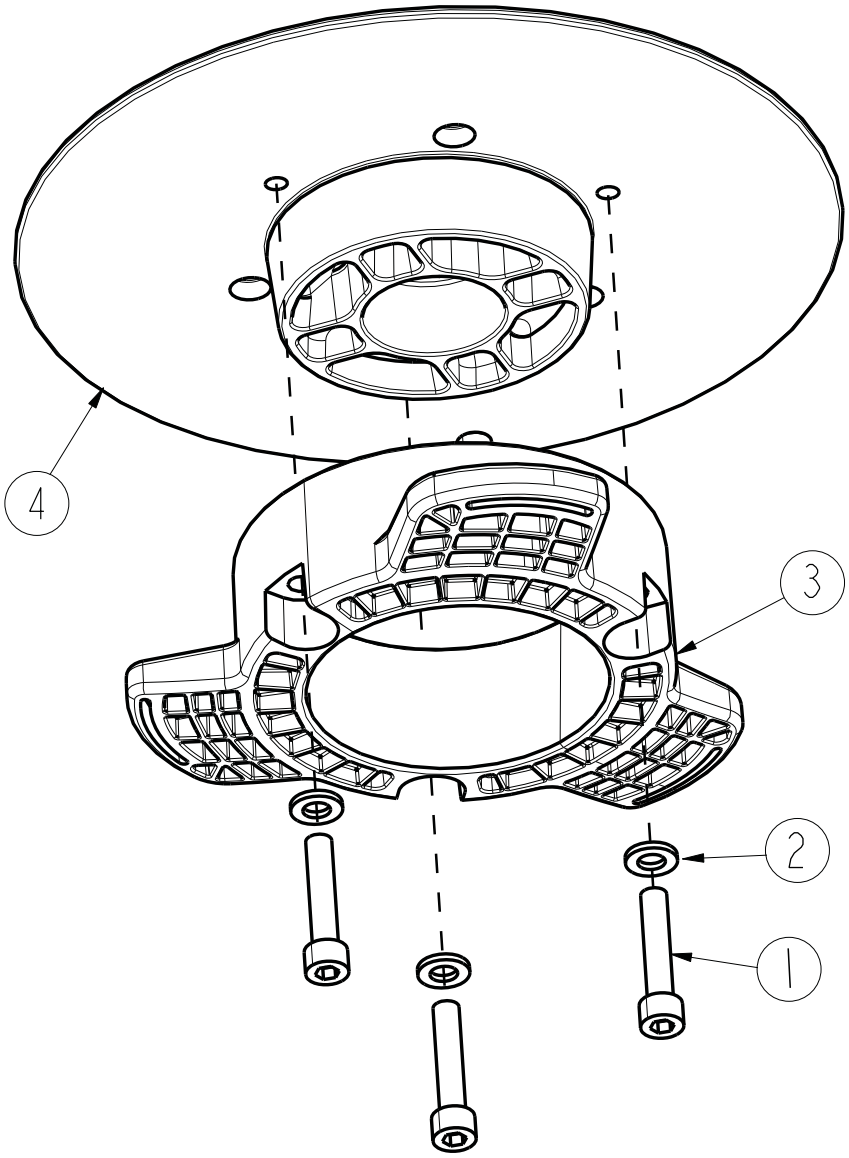

BILL OF MATERIAL - 172510			
ITEM	PART NO.	QTY	DESCRIPTION
1	11127000	3	SCR-SHCS M6X30 SS, ISO4762
2	12310256	3	WSR-FLT 6.4X12X1.6, SS DIN125
3	90541814	1	DRIVE HUB, PLASTIC 3 LOBE
4	172096MCH	1	BASE, DRIVE HUB WITH KEYWAY

Manufacturer PDF Provided by www.southeasternequipment.net

E17 Rear Squeegee Assembly (Straight)

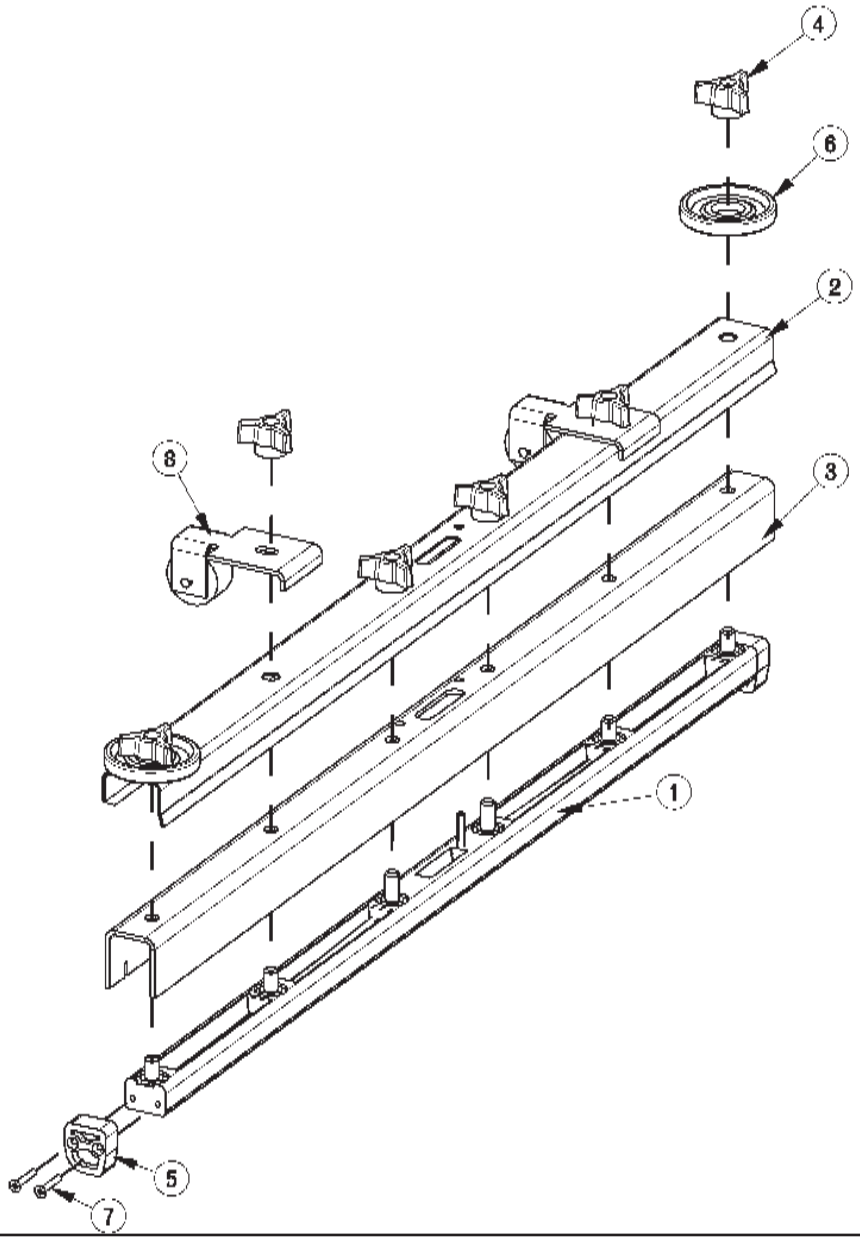

BILL OF MATERIAL - 210080			
ITEM	PART NO.	QTY	DESCRIPTION
1	210023	1	SQUEEGEE CASTING ASY
2	210024	1	SQUEEGEE MOUNT BKT
3	210065	1	SQUEEGEE BLADE 200 GUM
4	430074	6	ADJUSTING NUT 17B/E
5	430076	2	NYLON SQUEEGEE INSERT
6	430085	2	SQUEEGEE BUMPER WHEEL
7	712517	4	SCR-MC 8-32 X 1" ST PL - PH
8	831400	2	WHEEL ASSY

Manufacturer PDF Provided by www.southeasternequipment.net

E17 Rear Squeegee Assembly (Curved)

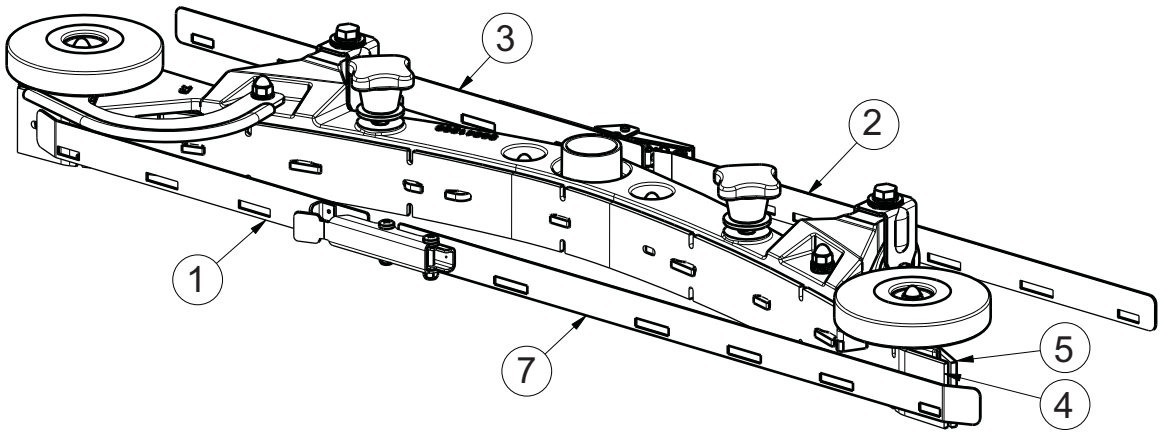

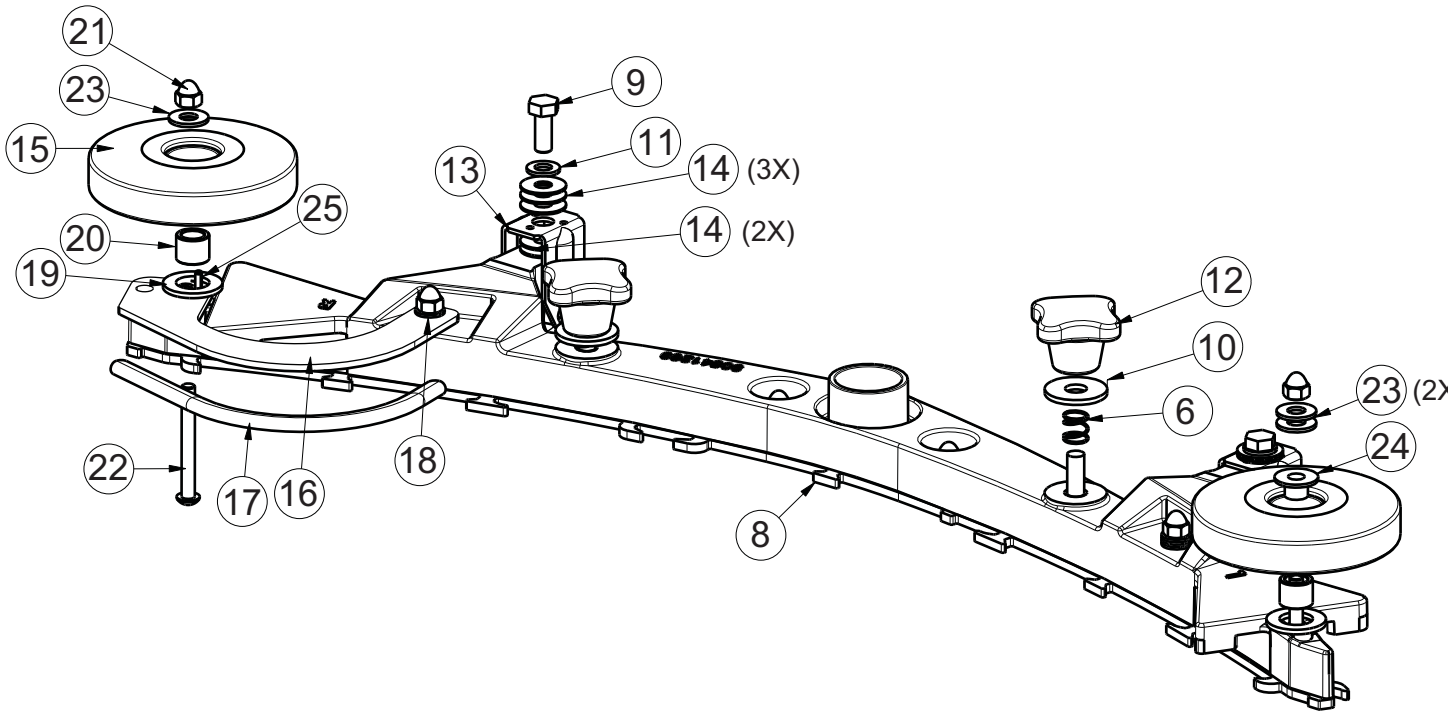

Manufacturer PDF Provided by www.southeasternequipment.net

E17 Rear Squeegee Assembly (Curved) BOM

BILL OF MATERIAL - 172530-1			
ITEM	PART NO.	QTY	DESCRIPTION
1	172224	1	STRAP WMT, FRT RT - 30" (760)
2	172226	1	STRAP WMT, REAR LEFT - 30" (760)
3	172227	1	STRAP WMT, REAR RT - 30" (760)
4	172258	1	SQUEEGEE-FRONT BLADE 30", 1/8 PU
5	172259	1	SQUEEGEE-REAR BLADE 30", 1/8 PU
6	172429	2	SPRING, COMP .4 ID X .5FL SS
7	172443	1	STRAP ASM W/ LATCH, FRONT, 30" SQG
8	172531	1	30" SQUEEGEE BASE ASM
9	717030	2	SCR-HH M8-1.25 X 20 SS
10	717040	2	WASHER-FLAT M10.5 X 30 X 2.5 SS
11	730609	2	WSR-FLT M8.4 X 16 X 1.6 A2 SS 140HV DIN
12	17133026	2	STAR HANDLE, M10, BLACK
13	90513094	2	FIXED CASTER
14	90531112	10	WASHER-FLAT 8.3 x 22 x 1.00mm STAINLESS
15	90548397	2	ROLLER - PLASTIC, 100mm DIA. (4")
16	172257	1	BUMPER, 30" SQG
17	172275	1	EDGE TRIM, 5/16 X 8" BLACK
18	711504	5	WASHER-FLAT 1/4 SS
19	711527	2	WASHER-FLAT .63 X 1.12 X .09
20	430322	2	BUSHING-.435 X .625 X .50 ZINC
21	712591	6	NUT-ACORN 1/4-20 SS
22	712592	2	SCR-BHSCS 1/4-20 X 2.25 SS
23	712772	3	WASHER-FLAT .344 X .75 X .06 SS
24	840202	1	BUSHING-FLG .31 X .435 X .325 NYL
25	3400727	1	PIN-ROLL 1/8 X .50 ZINC

Manufacturer PDF Provided by www.southeasternequipment.net

E20/H20 Rear Squeegee Assembly (Curved)

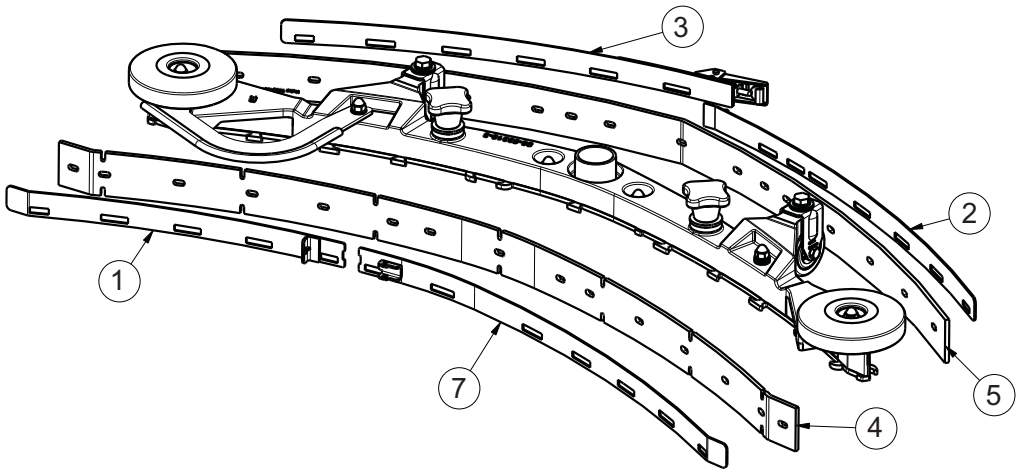

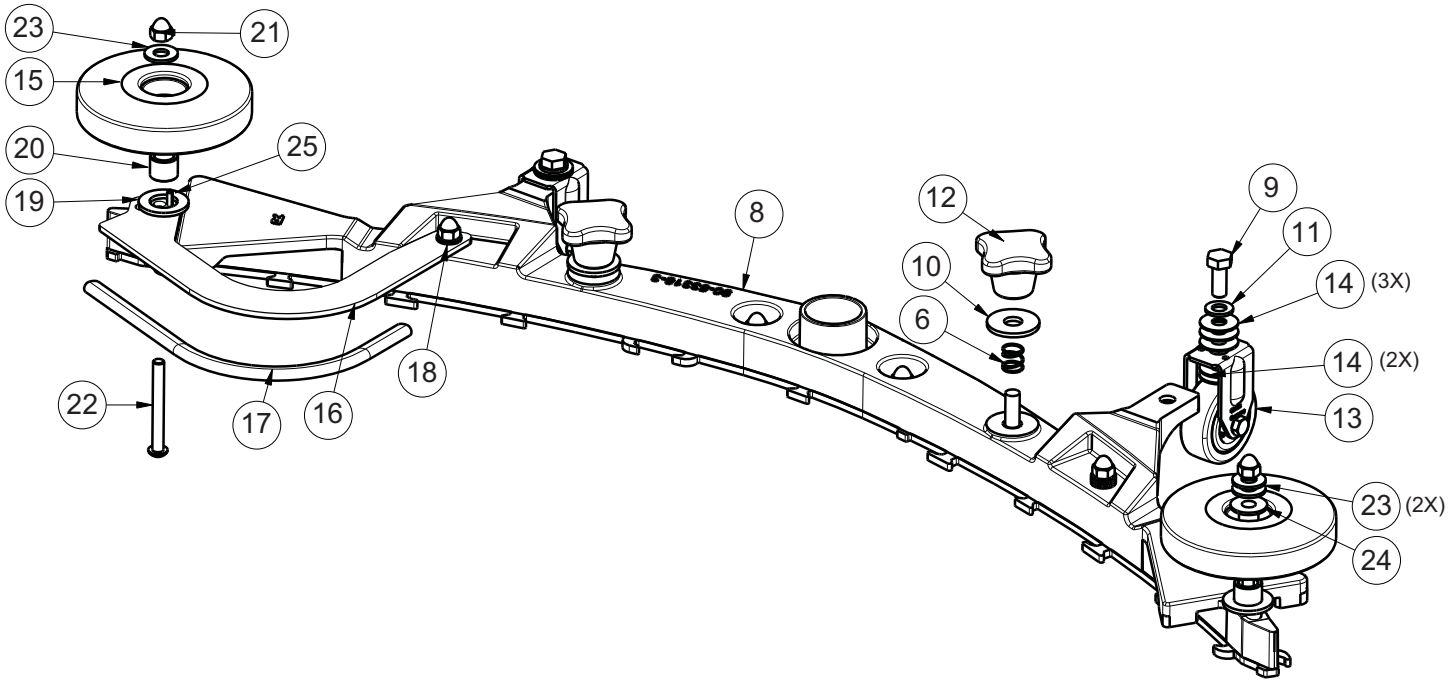

Manufacturer PDF Provided by www.southeasternequipment.net

E20/H20 Rear Squeegee Assembly (Curved) BOM

BILL OF MATERIAL - 172534-1			
ITEM	PART NO.	QTY	DESCRIPTION
1	172241	1	STRAP WMT, FRONT RT - 34" (860) SQG
2	172245	1	STRAP WMT, REAR LEFT - 34" (860) SQG
3	172246	1	WELD-STRAP REAR RT - 34" (860) SQG
4	172272	1	SQUEEGEE-FRONT BLADE 34", 1/8 PU
5	172273	1	SQUEEGEE-REAR BLADE 34", 1/8 PU
6	172429	2	SPRING, COMP .4 ID X .5FL SS
7	172440	1	STRAP W/ LATCH, FRONT LEFT, 34" SQG
8	90533183	1	CASTING, SQG BODY 34" (860MM)
9	717030	2	SCR-HH M8-1.25 X 20 SS
10	717040	2	WASHER-FLAT M10.5 X 30 X 2.5 SS
11	730609	2	WSR-FLT M8.4 X 16 X 1.6 A2 SS 140HV DIN
12	17133026	2	STAR HANDLE, M10, BLACK
13	90513094	2	FIXED CASTER
14	90531112	10	WASHER-FLAT 8.3 x 22 x 1.00mm STAINLESS
15	90548397	2	ROLLER - PLASTIC, 100mm DIA. (4")
16	172271	1	BUMPER, 34" SQG
17	172274	1	EDGE TRIM, 5/16 X 10" BLACK
18	711504	5	WASHER-FLAT 1/4 SS
19	711527	2	WASHER-FLAT .63 X 1.12 X .09
20	430322	2	USHING-.435 X .625 X .50 ZINC
21	712591	6	NUT-ACORN 1/4-20 SS
22	712592	2	SCR-BHSCS 1/4-20 X 2.25 SS
23	712772	3	WASHER-FLAT .344 X .75 X .06 SS
24	840202	1	BUSHING-FLG .31 X .435 X .325 NYL
25	3400727	1	PIN-ROLL 1/8 X .50 ZINC

Manufacturer PDF Provided by www.southeasternequipment.net

E17 Tension Band Sub-Assembly

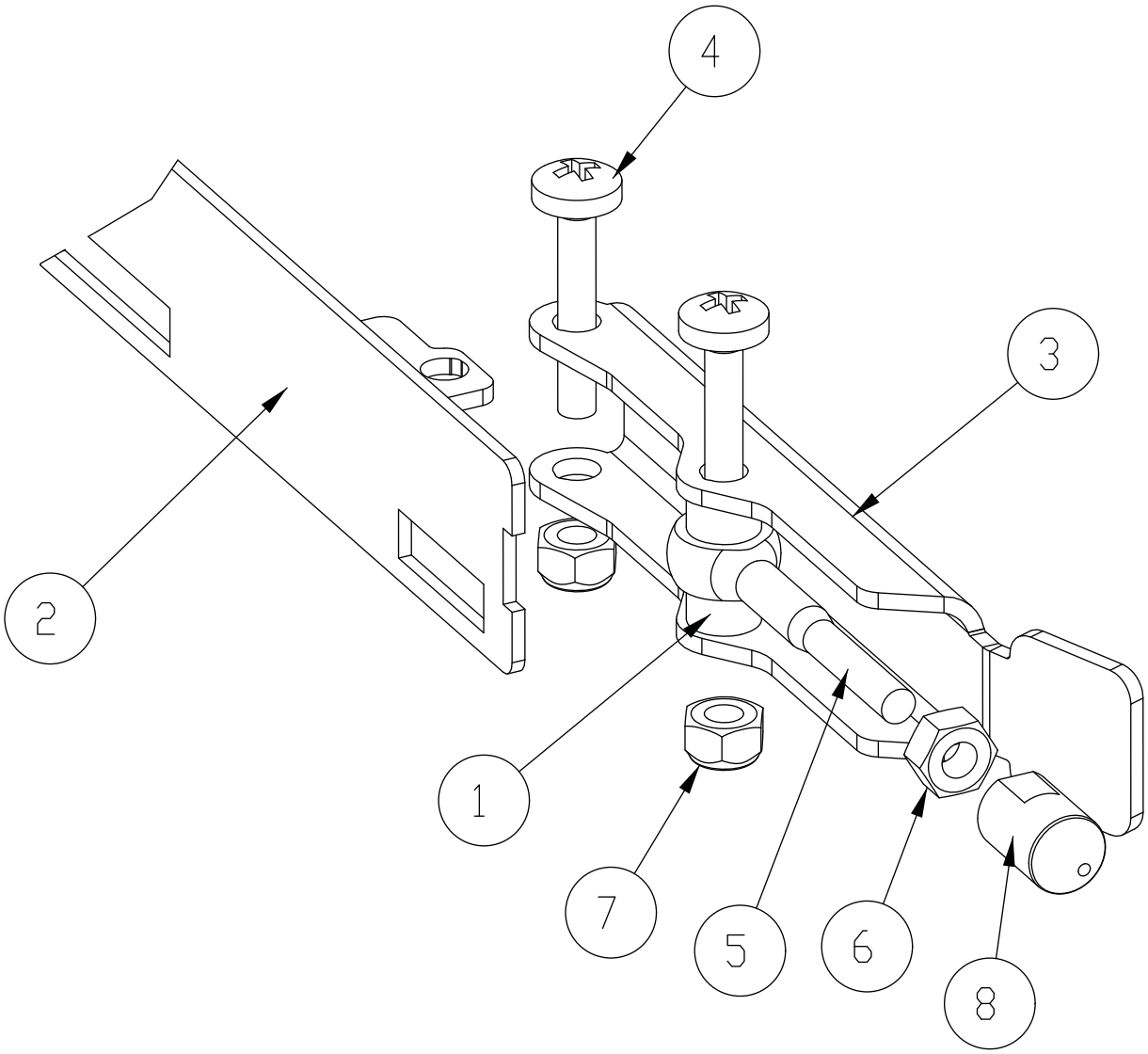

BILL OF MATERIAL - 172443			
ITEM	PART NO.	QTY	DESCRIPTION
1	172074	2	SPACER, 5/16OD X 17GA, ALUM
2	172223	1	STRAP WMT, FRT LEFT-30" (760)
3	172234	1	LEVER, 90535758
4	11175494	2	SCR-MC M5 X 25 SS DIN7985
5	11518313	1	BLT-EYE M5 X 40 SS
6	12022430	1	NUT- HEX, M5, SS DIN934
7	12040283	2	NUT- HEX, M5 NYLON LOCK, SS DIN985
8	90513631	1	PIN, THD 90513631

Manufacturer PDF Provided by www.southeasternequipment.net

E20/H20 Tension Band Sub-Assembly

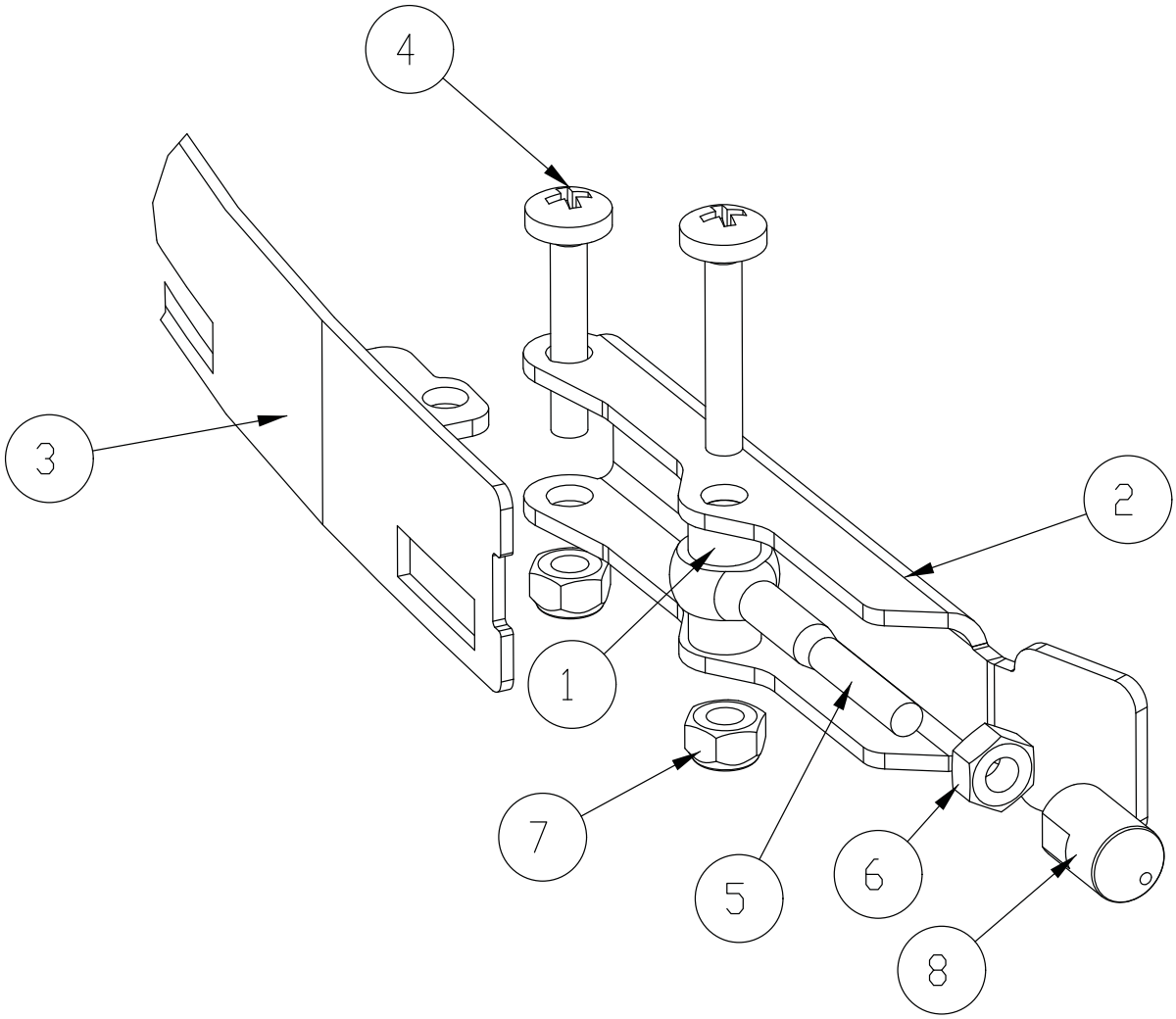

BILL OF MATERIAL - 172440			
ITEM	PART NO.	QTY	DESCRIPTION
1	172074	2	SPACER, 5/16OD X 17GA, ALUM
2	172234	1	LEVER, 90535758
3	172240	1	STRAP WMT, FRONT LEFT
4	11175494	2	SCR-MC M5 X 25 SS DIN7985
5	11518313	1	BLT-EYE M5 X 40 SS
6	12022430	1	NUT- HEX, M5, SS DIN934
7	12040283	2	NUT- HEX, M5 NYLON LOCK, SS DIN985
8	90513631	1	PIN, THD 90513631

Manufacturer PDF Provided by www.southeasternequipment.net

E17/E20/H20 Squeegee Mechanism Assembly

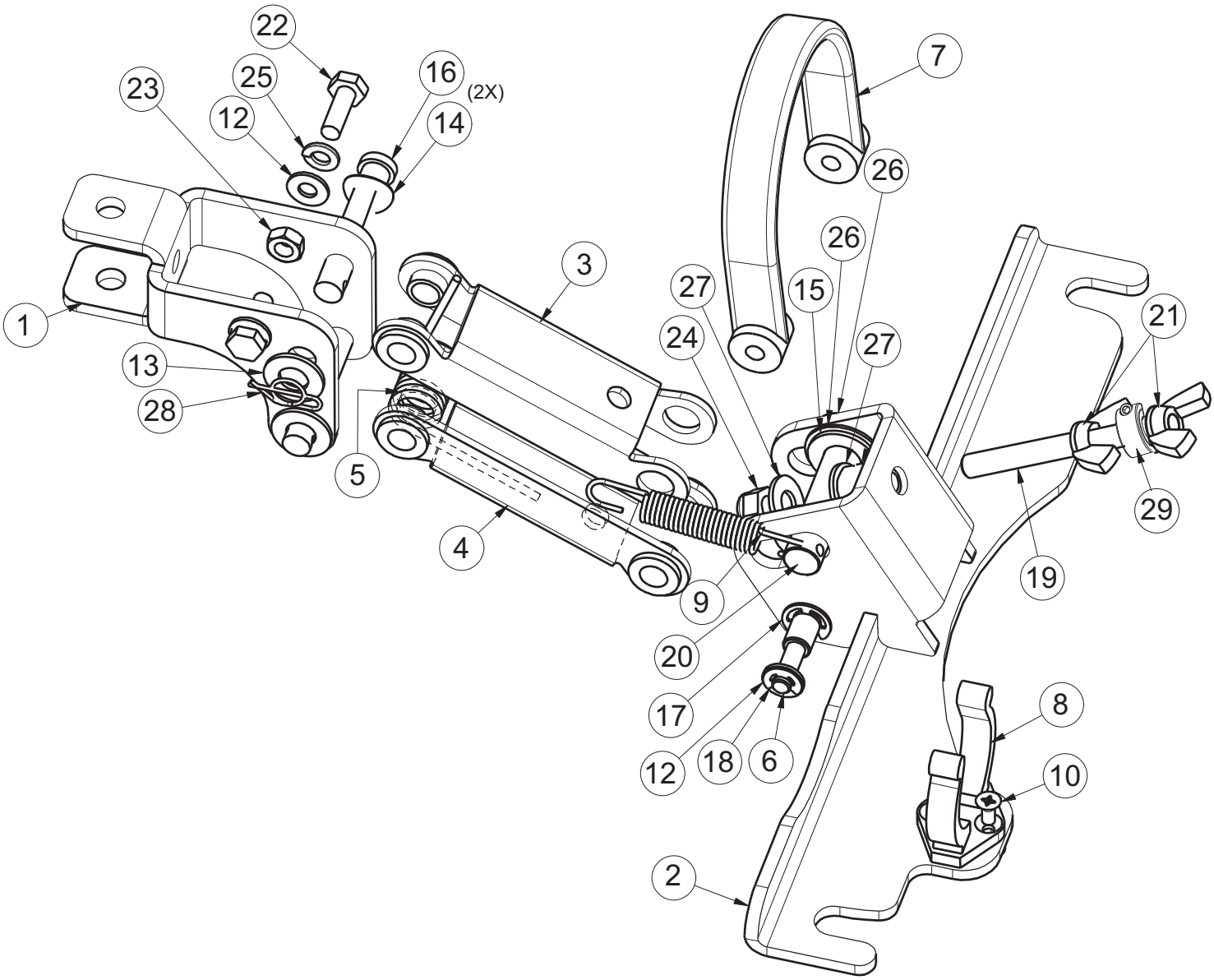

Manufacturer PDF Provided by www.southeasternequipment.net

E17/E20/H20 Squeegee Mechanism Assembly BOM

BILL OF MATERIAL - 172150			
ITEM	PART NO.	QTY	DESCRIPTION
1	172134	1	BKT, SQG HINGE
2	172155	1	SQUEEGEE MOUNT WMT
3	172196	1	UPPER SQG LINK
4	172197	1	LOWER SQG LINK
5	172261	1	SPRING, TORSION 1720 SQG
6	172352	1	PIN, 3/8 X 3.0, SQG STRAP
7	172357	1	STRAP, 9" PU, BLACK
8	260579	1	CLIP-TOOL 1.5 INCH HOSE
9	430051	1	SPRING-RETURN .313 X .438 X 2.93 SS
10	710528	2	SCR-FHMS 8-32 X .37 BRASS
11	711420	1	NUT-JAM 5/16-18 ZP
12	711504	4	WASHER-FLAT 1/4 SS
13	712767	2	WASHER-FLAT .406 X .75 X .035 SS
14	711523	2	WASHER-WAVE .37 X .68 X .08
15	711592	2	WASHER-FLAT 1/2 X .90 X .064 NYLON
16	711678	2	PIN-CLEVIS 3/8 X 2 1/4 ZP
17	711717	2	RET RING-E EXT .37
18	711720	2	RET RING-E EXT .25
19	712147	1	ROD-THD 5/16-18 X 3.25 SS
20	712148	1	PIN-CLEVIS 1/2 X 2.25 WITH HOLE
21	712157	2	NUT-WING 5/16-18 SS
22	712562	2	SCR-HH 1/4-20 X .75, 18-8 SS
23	712665	2	NUT-HEX 1/4-20 SS
24	712683	1	NUT-NYLOC 5/16-18 SS
25	712758	2	WASHER-LOCK 1/4 SPLIT SS
26	712760	3	WASHER-FLAT .56 X 1.06 X .04 SS
27	712772	2	WASHER-FLAT .344 X .75 X .06 SS
28	3400125	1	RING-RUE 3/8
29	713528	1	COLLAR-THREADED CLAMP 5/16-18X5/16-BK OX

Manufacturer PDF Provided by www.southeasternequipment.net

Kit K-E1720S - Water Solenoid Valve

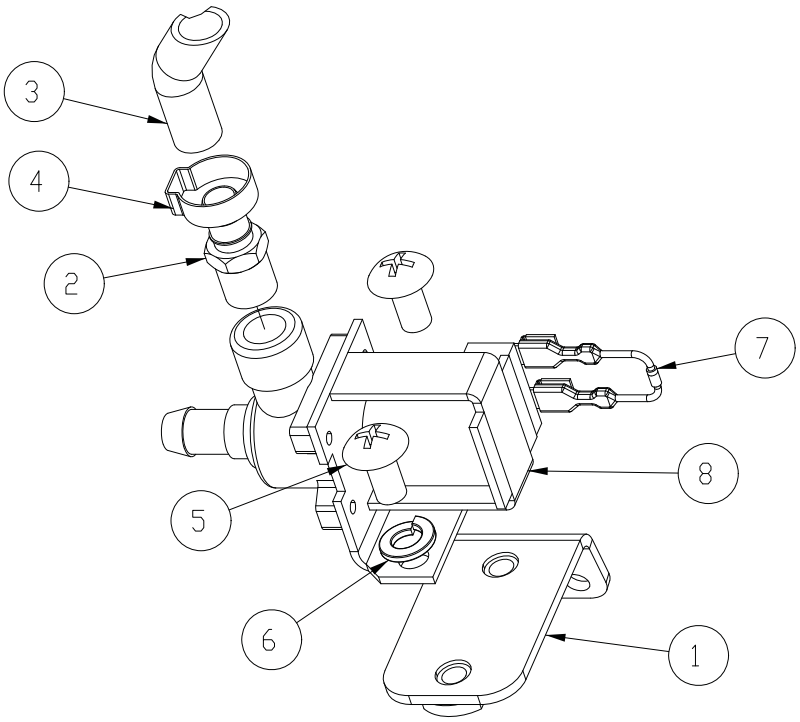

BILL OF MATERIAL - 172169			
ITEM	PART NO.	QTY	DESCRIPTION
1	172168	1	BKT, BD SOLENOID MOUNT
2	320264	1	FITTING BRASS - 3/8 DBL BARB X 1/4MPT
3	450055	1	HOSE-NYLO REINF 3/8 X 9"
4	450076	1	CLAMP-CRIMP 185R SS
5	710196	2	SCR-MC 5/16-18 X .62
6	711545	2	WSR-HELICAL 5/16
7	740482	1	DIODE ASY, 1N4007 W/PIGGY
8	740493	1	WATER VALVE 24VDC

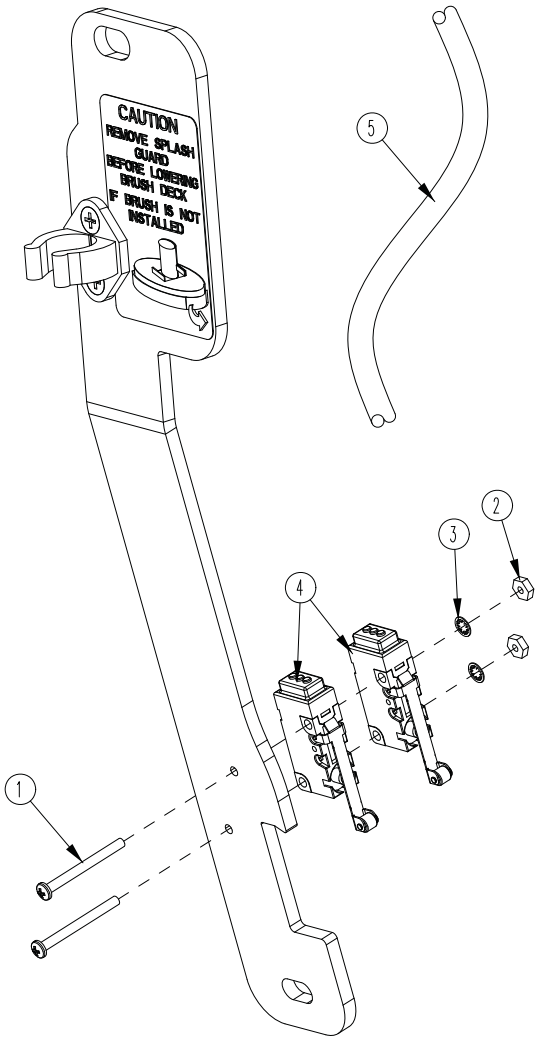

BILL OF MATERIAL -			
ITEM	PART NO.	QTY	DESCRIPTION
1	710495	2	SCR-MC 4-40 X 1.25 STL Z
2	711428	2	NUT-HEX 4-40
3	712326	2	WSR-INT LOCK #4
4	747603-2	2	SWITCH ASY, MICRO ROLLER W/PACK/CONDUIT
5	747660	1	HARNESS, SOLENOID KIT E1720BD

Manufacturer PDF Provided by www.southeasternequipment.net

Manufacturer PDF Provided by www.southeasternequipment.net

1 Wiring Diagrams

PAGE LAYOUT

1	2	3

PAGES GO TOGETHER AS SHOWN TO SEE THE ENTIRE SCHEMATIC AS ONE.

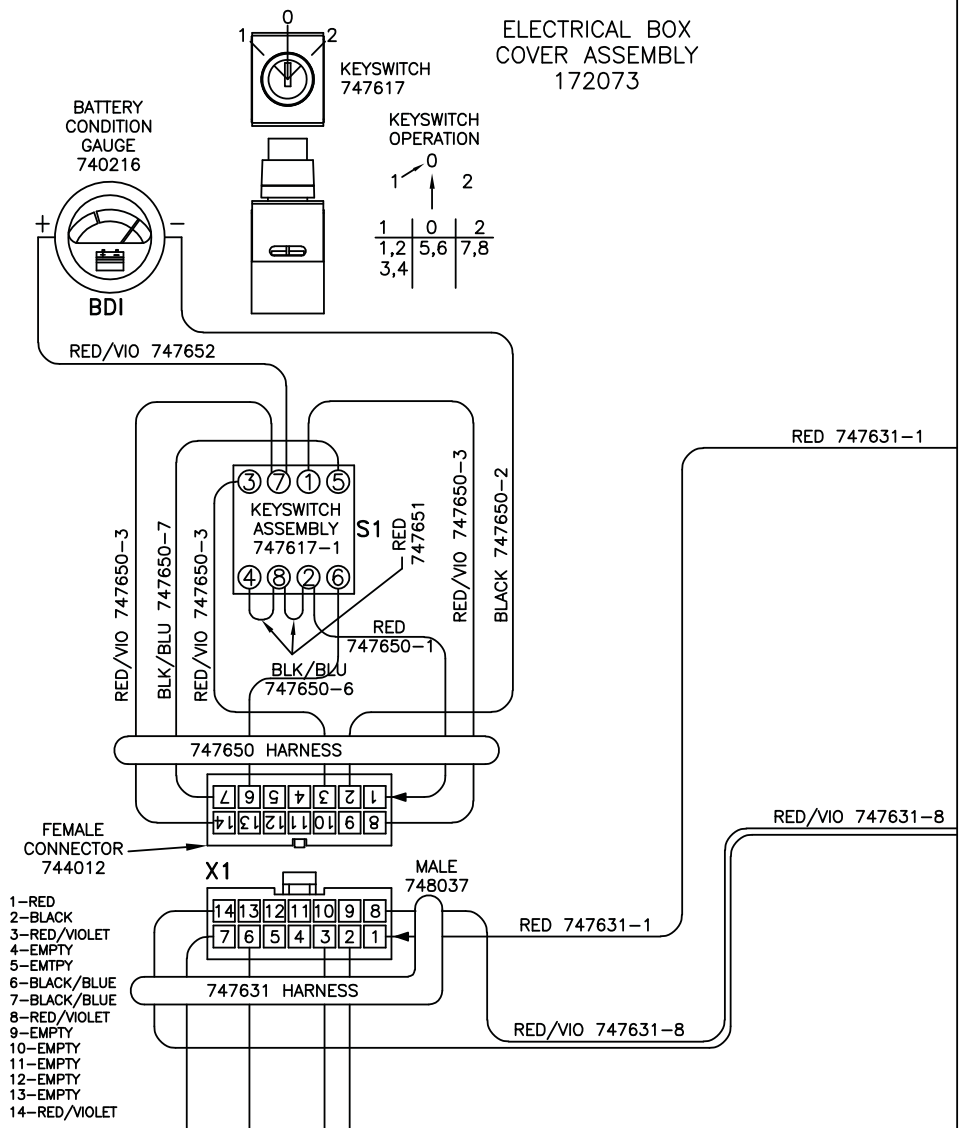

X1:MAIN KEYSWITCH ASSEMBLY: 747617-1

PIN #	COLOR	WHERE TO/FROM
1	RED	X13: BATTERY CHARGER INTERNAL RELAY
2	BLACK	RELAY COILS: 0V
3	RED/VIOLET	BRUSH MOTOR RELAY COIL: 24VDC
4	–	–
5	–	–
6	BLACK/BLUE	BRUSH RELAY NORMALLY CLOSED
7	BLACK/BLUE	BRUSH UNLOAD SWITCH P:B
8	RED/VIOLET	X12: MAIN RELAY COIL: 24VDC
9	–	–
10	–	–
11	–	–
12	–	–
13	–	–
14	RED/VIOLET	X12: MAIN RELAY COIL: 24VDC

BATTERY CHARGER: 957937, 957938 or 957939

	COLOR	WHERE TO/FROM
X13	YELLOW	X13: KEYSWITCH P:1
X14	GREEN	X14: CONTROL CB 4.0A
14GA	WHITE	MAIN RELAY + (REAR LEFT POST)
14GA	BLACK	MAIN RELAY – (FRONT LEFT POST)

OTHER WIRE COLORS

–	RED	BATTERY 24VDC: +
–	BLACK	BATTERY 0VDC: –
–	GREEN/YELLOW	GROUND
–	BLACK/BLUE	BRUSH UNLOAD CIRCUIT
–	RED/BLACK	BRUSH UNLOAD CIRCUIT:MICRO SWITCH
–	RED/VIOLET	24VDC AFTER MAIN KEYSWITCH
X15	GREY/RED	OPTIONAL POWER 24VDC: 3A MAX
X16	GREY/BLACK	OPTIONAL POWER 0VDC: 3A MAX

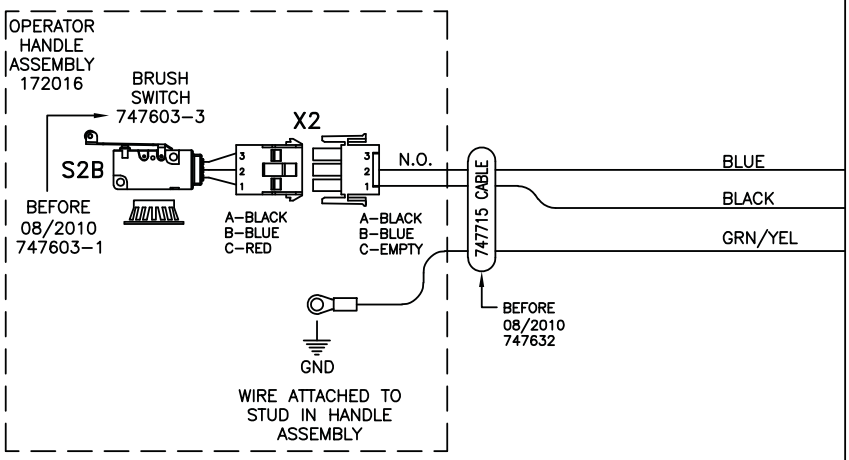

Manufacturer PDF Provided by www.southeasternequipment.net

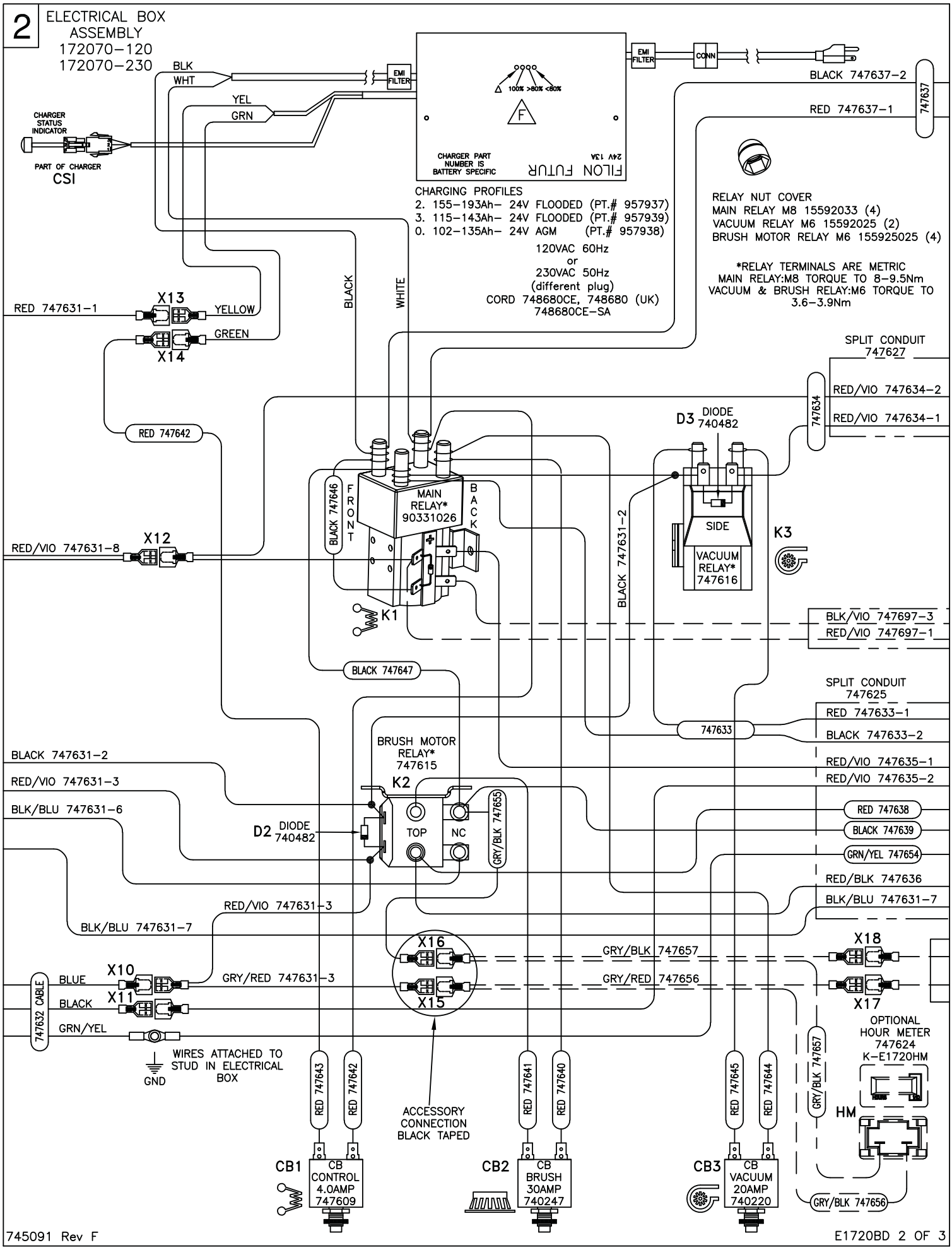

Manufacturer PDF Provided by www.southeasternequipment.net

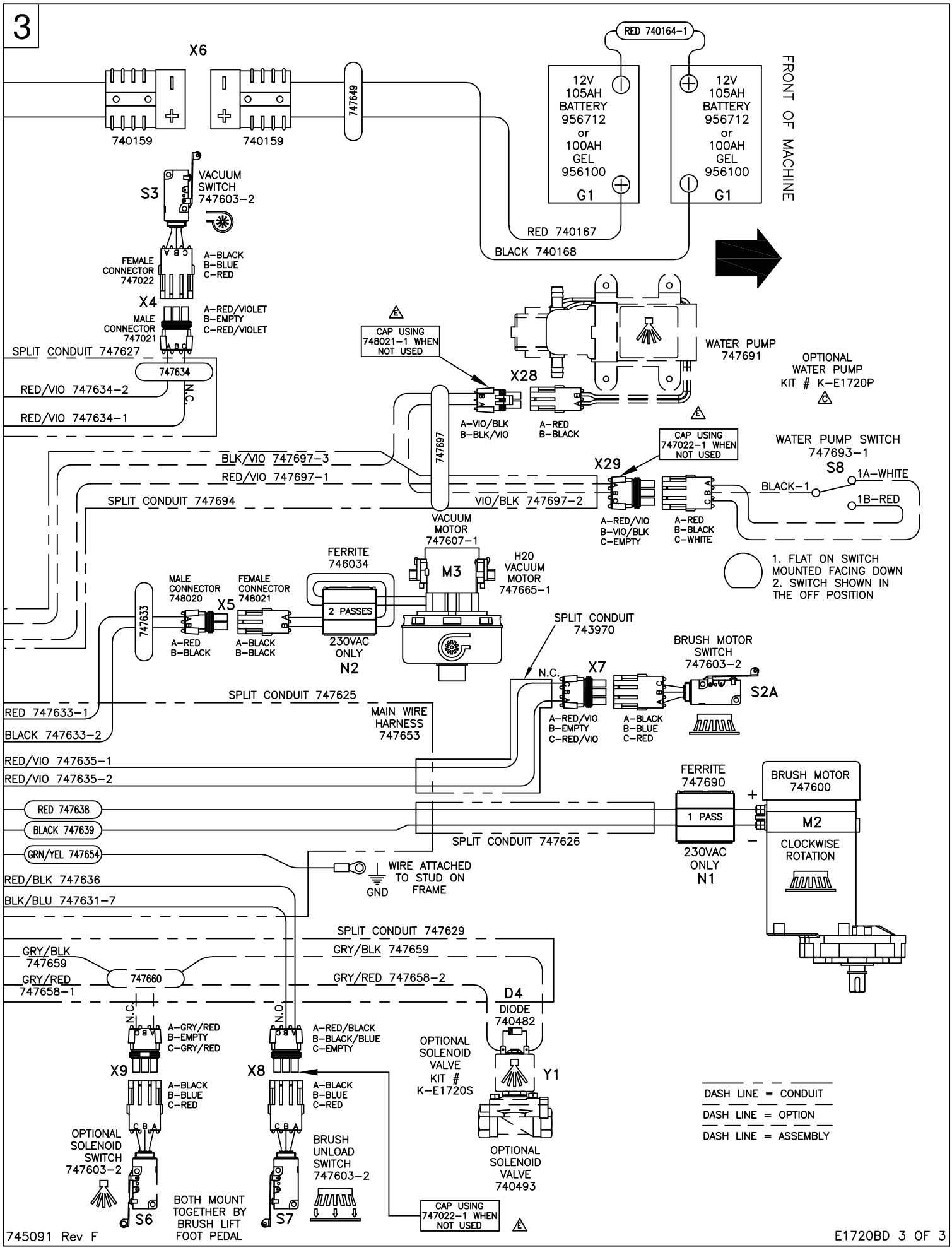

Manufacturer PDF Provided by www.southeasternequipment.net

E1720BD PART REFERENCE LIST
Schematic 745091

REFERENCE #	COMPONENT NAME	PART NUMBER
M1 (optional)	PUMP, WATER (KIT K-E1720P)	747691
M2	MOTOR, BRUSH	747600
M3	MOTOR, VACUUM ASSEMBLY	747607-1
M3 (model specific)	MOTOR, VACUUM ASSEMBLY (H20 only)	747665-1
Y1 (optional)	SOLENOID VALVE, WATER (KIT K-E1720S)	740493
K1	RELAY, MAIN	90331026
K2	RELAY, BRUSH MOTOR	747615
K3	RELAY, VACUUM	747616
CB1	CIRCUIT BREAKER 4.0A, CONTROL	747609
CB2	CIRCUIT BREAKER 30A, BRUSH MOTOR	740247
CB3	CIRCUIT BREAKER 20A, VACUUM MOTOR	740220
S1	KEYSWITCH	747617
S2A	SWITCH, BRUSH MOTOR (at motor)	747603-2
S2B	SWITCH, BRUSH MOTOR (handle)	748603-1
S3	SWITCH, VACUUM MOTOR	748603-2
S6	SWITCH, BRUSH UNLOAD	748603-2
S7 (optional)	SWITCH, SOLENOID (KIT K-1720S)	747603-2
S8 (optional)	SWITCH, PUMP- OFF AISLE WAND (KIT K-1720P)	747693-1
CSI	CHARGER STATUS INDICATOR	747614
HM (optional)	HOUR METER (KIT K-E1720HM)	747624
BC (model specific)	BATTERY CHARGER 115VAC (battery type specific)	957761 (-1 or G-4)
BC (model specific)	BATTERY CHARGER 230VAC (battery type specific)	957760 (-1 or G-4)
G1	BATTERY, 12V 105AH (2 REQUIRED)	956712
G1 (optional)	BATTERY, GEL 12V 100AH (2 REQUIRED)	956100
N1	FERRITE, BRUSH MOTOR	747690
N2	FERRITE, VACUUM MOTOR	746034
D1	DIODE, MAIN RELAY	Part of K1
D2	DIODE ASM, BRUSH MOTOR RELAY	740482
D3	DIODE ASM, VACUUM MOTOR RELAY	740482
D4 (optional)	DIODE ASM, SOLENOID VALVE (KIT K-E1720S)	740482

REFERENCE #	CONNECTOR FUNCTION	PART # -female	PART # -male
X1	KEYSWITCH (S1)	744012	748037
X2	SWITCH, BRUSH MOTOR (S2B)	747022	747021
X3	CHARGER STATUS INDICATOR (CSI)	Part of CSI	Part of BC
X4	SWITCH, VACUUM (S3)	747022	747021
X5	MOTOR, VACUUM (M3)	748021	748020
X6	BATTERY CONNECTOR	740159	740159
X7	SWITCH, BRUSH MOTOR (S2A)	747022	747021
X8	SWITCH, BRUSH UNLOAD (S4)	747022	747021
X9	SOLENOID VALVE, WATER (Y1)	747022	747021
X10	OPERATOR HANDLE CABLE	741093	740697
X11	OPERATOR HANDLE CABLE	740366	740697
X12	KEYSWITCH (S1)- MAIN RELAY COIL (K1)	741093	741165
X13	BATTERY CHARGER (BC)- INTERNAL RELAY	740366	740697
X14	BATTERY CHARGER (BC)-INTERNAL RELAY	740366	740697
X15	SOLENOID (Y1) /HOUR METER CONNECTION (HM)	740366	741165
X16	SOLENOID (Y1) /HOUR METER CONNECTION (HM)	740366	741165
X17	OPTIONAL HOUR METER (HM) WIRE-747656	740366	741165
X18	OPTIONAL HOUR METER (HM) WIRE-747657	740366	741165
X28 (optional)	SWITCH, TOGGLE WATER PUMP (S8)	747022	747021
X29 (optional)	PUMP, OFF AISLE WAND (M1)	748021	748020

Last Updated 01/07/10

Manufacturer PDF Provided by www.southeasternequipment.net

Minuteman International Made Simple Commercial Limited Warranty

REVISION Q
EFFECTIVE 4/10/18

Minuteman International, Inc. warrants to the original purchaser/user that the product is free from defects in workmanship and materials under normal use. Minuteman will, at its option, repair or replace without charge, parts that fail under normal use and service when operated and maintained in accordance with the applicable operation and instruction manuals. All warranty claims must be submitted through and approved by factory authorized repair stations.

This warranty does not apply to normal wear, or to items whose life is dependent on their use and care, such as belts, cords, switches, hoses, rubber parts, brushes, electrical motor components or adjustments. Parts manufactured by Minuteman are covered by and subject to the warranties and/or guarantees of their manufacturers. Please contact Minuteman for procedures in warranty claims against these manufacturers.

Special warning to purchaser -- Use of replacement filters and/or pre-filters not manufactured by Minuteman or its designated licensees, will void all warranties expressed or implied. A potential health hazard exists without original equipment replacement.

All warranted items become the sole property of Minuteman or its original manufacturer, whichever the case may be.

Minuteman disclaims any implied warranty, including the warranty of merchantability and the warranty of fitness for a particular purpose. Minuteman assumes no responsibility for any special, incidental or consequential damages.

This limited warranty is applicable only in the U.S.A. and Canada, and is extended only to the original user/purchaser of this product. Customers outside the U.S.A. and Canada should contact their local distributor for export warranty policies. Minuteman is not responsible for costs or repairs performed by persons other than those specifically authorized by Minuteman. This warranty does not apply to damage from transportation, alterations by unauthorized persons, misuse or abuse of the equipment, use of non-compatible chemicals, or damage to property, or loss of income due to malfunctions of the product.

If a difficulty develops with this machine, you should contact the dealer from whom it was purchased.

This warranty gives you specific legal rights, and you may have other rights which vary from state to state. Some states do not allow the exclusion or limitation of special, incidental or consequential damages, or limitations on how long an implied warranty lasts, so the above exclusions and limitations may not apply to you.

Manufacturer PDF Provided by www.southeasternequipment.net

Model	Parts	Labor	Poly	Travel**
Cord Electric Group	5yrs	3yrs	12yrs	90 days
Battery Auto Scrubbers (incl. on board charger)	5yrs	3yrs	12yrs	90 days
Battery and Manual Sweepers	3yrs	3yrs	12yrs	90 days

Exceptions…….

Model	Parts	Labor	Poly	Travel**
Port A Scrub, all models (incl. on board charger)	1yr	6months	12yrs	90 days
A3S Blower	1yr	1yr	0	0
Phenom Dual Motor Upright Vacuums	2yrs	2yrs	0	0
Explosion Proof Vacuum	1yr	1yr	0	0
Propane Burnisher	1yr	1yr	0	90 days
E14BQP and E14115 scrubber	1yr	1yr	12yrs	90 days
EZ-Mop	1yr	1yr	0	90 days
ROS-17	1yr	1yr	0	90 days
				**Travel, 2 hours max

Stand-alone Battery Chargers:	One year
Replacement Parts:	Ninety days
Batteries:	0-3 months full replacement, 4-12 months pro-rate
Polypropylene Plastic Tanks:	12yr warranty, no additional labor

Manufacturer PDF Provided by www.southeasternequipment.net

Minuteman®
Excellence Meets Clean

"Excellence Meets Clean"

Minuteman is a Full Line Manufacturer of Sweepers and Scrubbers, for Industrial Facilities.

14N845 U.S. Route 20, Pingree Grove, IL 60140 USA
Phone (800) 323-9420 - www.minutemanintl.com
A Member of the Hako Group

988720 Rev P 07/20